Extreme High Temperature Seal Option – Up to 400°F

For Series 2H/2HD, 3H/3HD, 2A and 3L Cylinders

Customer Value Proposition:

Parker's Extreme High Temperature Seal Option will provide OEM's and End Users an increase in machine productivity through improved resistance to heat degradation as compared to typical fluorocarbon seals. With a maximum continuous temperature rating of 400°F, the Extreme High Temperature Seal Option will allow longer service life in applications that require the use of alternative fluid types and demand superior heat resistance. Parker's innovative seal design utilizes PTFE materials that are constantly energized to provide seal life comparable to Class 1 materials. Customers utilizing this design will realize a reduction in machine downtime due to seal failure associated with high temperature exposure.

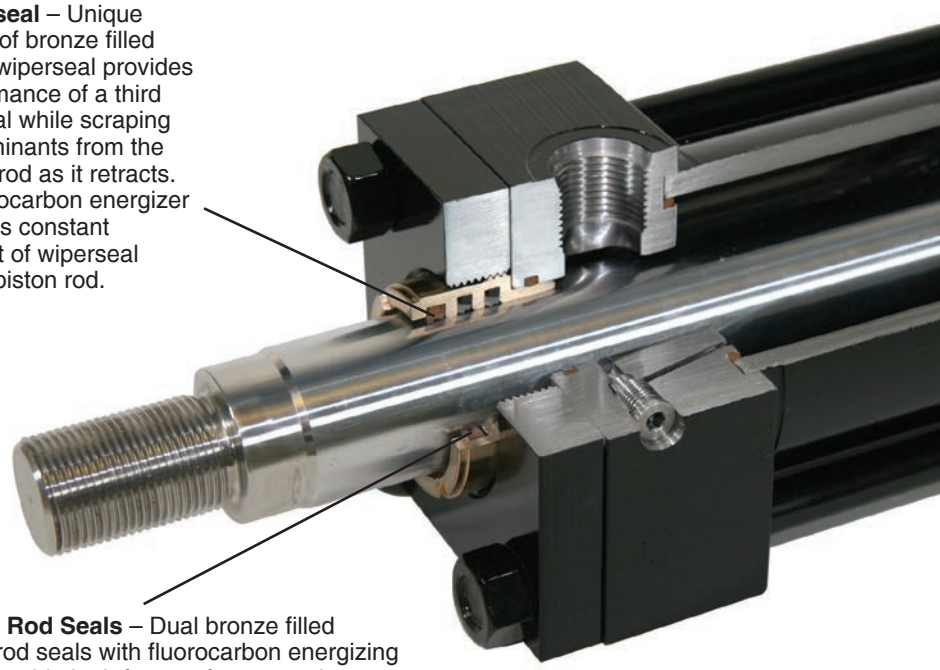

Wiperseal – Unique profile of bronze filled PTFE wiperseal provides performance of a third rod seal while scraping contaminants from the piston rod as it retracts. A fluorocarbon energizer ensures constant contact of wiperseal to the piston rod.

Piston Rod Seals – Dual bronze filled PTFE rod seals with fluorocarbon energizing rings provide leak-free performance, long life, and heat resistance to 400° F.

Contact Information:

Parker Hannifin Corporation
Industrial Cylinder Division
500 S. Wolf Rd.
Des Plaines, IL 60016

phone 847 298 2400
fax 800 892 1008

www.parker.com/cylinder

Product Features:

- Operating temperature to 400° F
- Broad range of fluid compatibility
- Available bore sizes: 1½" through 8"; rod diameters 1" through 5½"
- Stainless steel spring loads both dynamic and static piston seal lips
- No additional delivery time

ENGINEERING YOUR SUCCESS.

Cylinders for High Temperature Applications

When your customer demands a long life cylinder with outstanding heat resistance, look no further than Parker's new Extreme High Temperature Seal option.

Filled PTFE piston seals, rod seals, and wiperseal provide maximum resistance to extreme heat (up to 400° F) with no stated reduction in service life.

PTFE seals are mechanically energized to maintain uniform contact to dynamic sealing surfaces for positive leak-free performance across the entire operating pressure range. Static seals are fluorocarbon for a complete heat resistant assembly.

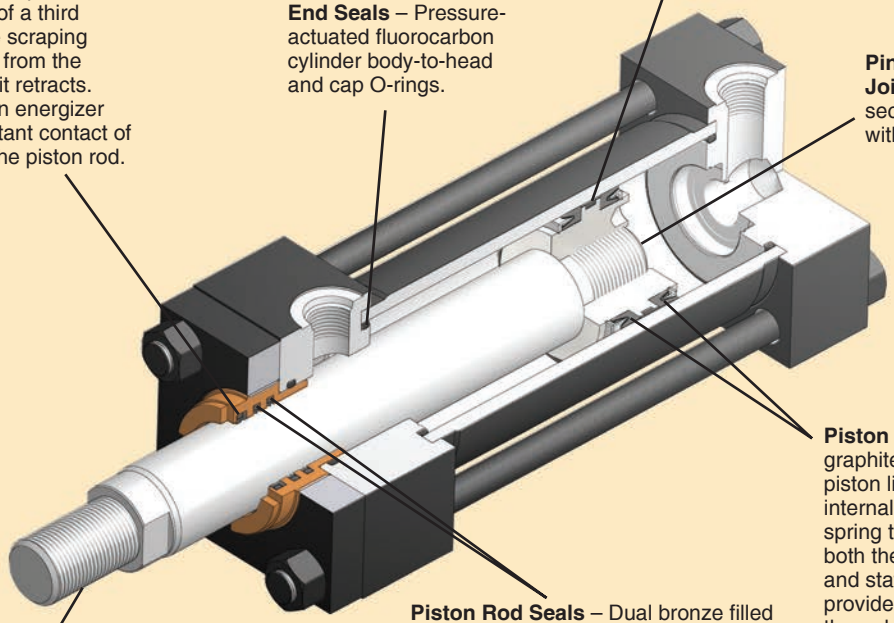

ENGINEERING YOUR SUCCESS.