# 2MA Series

## Non-Lube NFPA Air Cylinder

***For installation, maintenance and replacement parts information, go to www.parker.com/actsafety.***

**Contents**

Features ..... C2
Ordering Information ..... C4
Mounting Styles/Bore Sizes ..... C5
Specifications, Weights ..... C6
Cylinder Selection ..... C7
Dimensions, 1¼" to 4" Bore Sizes ..... C8
Dimensions, 5" to 8" Bore Sizes ..... C20
Double Rod End Dimensions ..... C34
2ML Hydraulic Cylinder Gland Dimensions ..... C35
Style 55 Rod End ..... C36
Cushions, Bumpers ..... C37
Bumper Seal Option ..... C38
Linear Position Sensor Option ..... C39
Cylinder Accessories ..... C44



**Parker Hannifin Corporation**
Actuator Division
Wadsworth, Ohio USA

## 1¼" to 4" Bore Sizes Shown

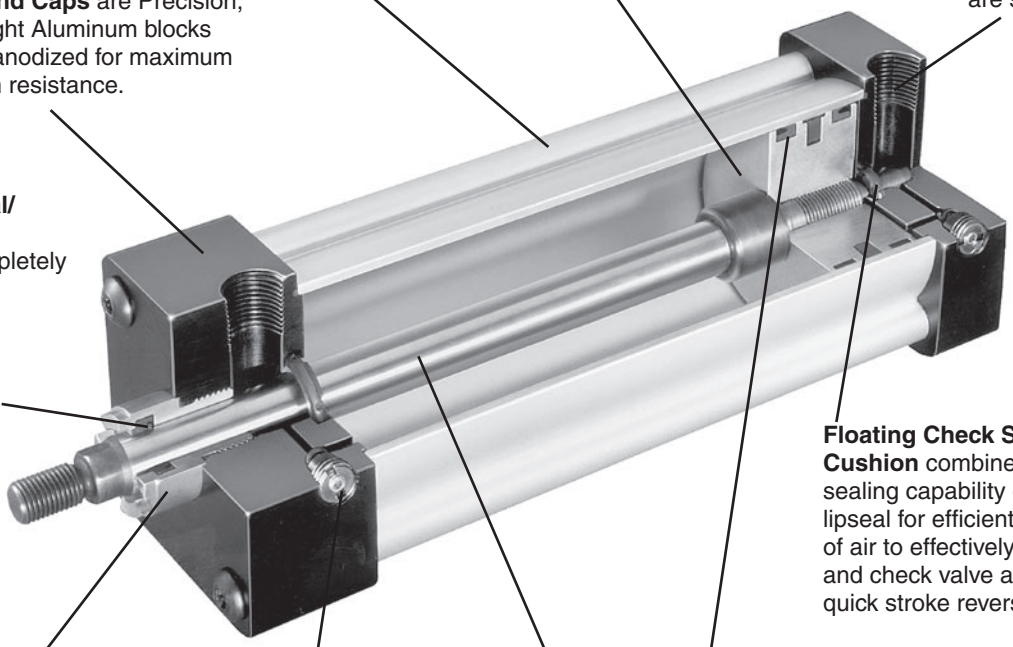

**Extruded Aluminum Body**
Lightweight cylinder body is a unique extruded profile design that provides strength and eliminates areas of contamination. Anodized aluminum tube and steel tie rod construction for 5"-8" bores.

**Piston**
Aluminum piston, with its nylon wear band, increases cylinder life and eliminates metal-to-metal contact. Optional magnet piston for use with reed or solid state sensors. Anaerobic adhesive is used to permanently lock and seal the piston to the rod.

**Ports**
NPTF ports are standard.

**Heads and Caps** are Precision, Lightweight Aluminum blocks that are anodized for maximum corrosion resistance.

**Piston Rod Lipseal/ Wiper**
combination is completely self compensating for zero leakage at all pressures. Keeps pressure in, contamination out.

**Floating Check Seal Cushion** combines the sealing capability of a lipseal for efficient capture of air to effectively cushion and check valve action for quick stroke reversal.

**Rod Gland**
Threaded bronze gland is externally removable, without cylinder disassembly, for easy maintenance.

**Rounded lip piston seals** glide on lubricant film to maximize life.

**Cushion Needle Valves** make precise adjustment quick and easy. Captive cushion design allows for safe cushion adjusting while cylinder is under pressure. Brass material to resist corrosion.

**Piston-Rod —** Hard chrome-plated and polished piston rod of 100,000 PSI yield, high tensile strength steel **case hardened** to 50-54 $R_c$ for reliable performance, long rod seal life and less friction.

***For installation, maintenance and replacement parts information, go to www.parker.com/actsafety.***



**Parker Hannifin Corporation**
Actuator Division
Wadsworth, Ohio USA

C086

## 2MAE Series

Recommended for use where exposure to chemicals or corrosive agents and/or problems of sanitary maintenance are critical, including food processing and packaging equipment; in any application as an alternative to chrome plating or stainless steel.

The LECTROFLUOR® series of high-technology polymer-based coatings was developed to act as a protective surface on non-ferrous metals. They provide superior resistance to corrosion and chemical attack in hostile environment applications. In addition, LECTROFLUOR® coatings carry USDA approval/FDA compliance for use in food, pharmaceutical or medical applications.

Corrosion resistant mounting plates and rod end accessories are available. See Accessories on page C44.

LECTROFLUOR® is a registered trademark of General Magnaplate Corporation.

**Anodized LECTROFLUOR® * Coated Aluminum Body**
Lightweight cylinder body: unique design provides strength, eliminates areas of contaminant collection and allows for effective washdown.

**18-8 Stainless Steel Fasteners**

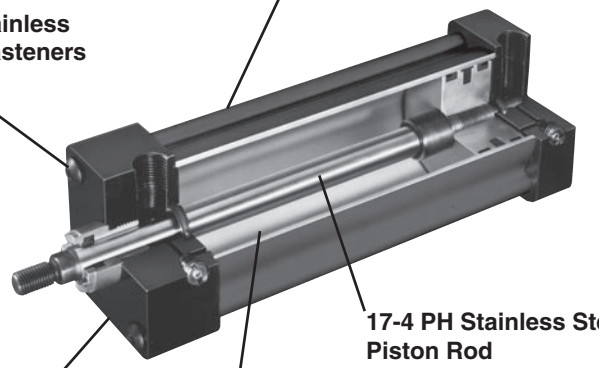

**17-4 PH Stainless Steel Piston Rod**
High strength for reliable performance, corrosion resistance, long rod seal life, and less friction. Other stainless grades available.

**Heads and Caps** are precision, lightweight aluminum blocks that are **LECTROFLUOR®** coated for maximum corrosion resistance.

**LECTROFLUOR®* Coated Cylinder Construction**
Proven “Synergistic” coating prevents corrosion by caustic solutions.

## 2MA with Linear Position Sensor Option

- Precise Continuous Position Feedback
- Non-Contact Sensing
- Analog or Digital Outputs
- Bore Sizes 2" - 8"
- Available in Eleven Mounting Styles

*See pages C39-C43 for more information*

## 2MNR Series

For a non-rotating version of the 2MA, see the 2MNR Series in Section C.

## HB Series

For guided version of the 2MA, see the HB Series in Section F.

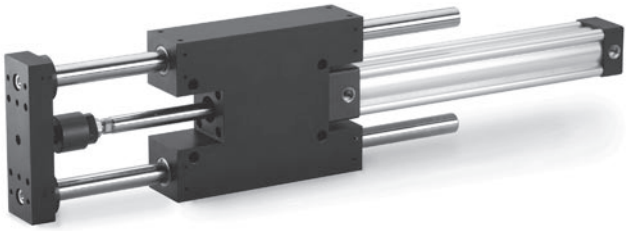



**Parker Hannifin Corporation**
Actuator Division
Wadsworth, Ohio USA

C086

## How to Order 2MA/2MAE/2ML Series Cylinders

These pneumatic cylinders can be specified by model number by using the table below.

| 2.00 | C | | J | 2MA | | U | | | 1 | 4 | A | C | 6.000 |
|---|---|---|---|---|---|---|---|---|---|---|---|---|---|

**Bore Size**

1.25 [1]
1.50 [1]
2.00
2.50
3.25
4.00
5.00
6.00
8.00

**Cushion Head End**

Use "C" only if head end cushion is required (Series 2MA/2MAE only).
Not available on 2ML.

**Double Rod Cylinder**

Use "K" only if double rod cylinder is required.

**Mounting Style**

Specify mounting style code. (See table on following page.)

**Series**

| | |
|---|---|
| **2MA** | Air service |
| **2MAE** | Clean Plus (1½" to 4" only) |
| **2ML** | Hydraulic service [2] (1½" to 8" only) |

**Piston**

| | |
|---|---|
| **Blank** | Standard |
| **3** | Magnetic Piston [3] |
| **4** | Bumper Seals [2] |
| **6** | Bumper Seals & Magnetic Piston [2, 3] |
| **B** | Bumpers Both Ends [2, 4] |
| **H** | Bumper Head End [2, 4] |
| **C** | Bumper Cap End [2, 4] |

**Ports**

| | |
|---|---|
| **U** | NPTF |
| **R** | BSPP |
| **B** | BSPT |
| **T** | SAE |

**Seals**

| | |
|---|---|
| **Blank** | Std. Nitrile Seals |
| **V** | Fluorocarbon [5] |
| **E** | Fluorocarbon rod seal only. |

**Special Modification**

Use "S" for special modification other than rod end, and specify modification. (Includes 2MA with Linear Position Sensor Option.[6])

**Piston Rod Number**

Specify rod code number for rod diameter required. [7]

**Piston Rod Thread Style**

| | |
|---|---|
| **4** | Small Male |
| **8** | Intermediate Male |
| **9** | Short Female |
| **3** | Special (and specify all dimensions required) |
| **55** | Split Coupler [8] |

**Piston Rod Thread Type**

| | |
|---|---|
| **A** | UNF (Unified Thread) |
| **W** | BSF (British Fine) |
| **M** | Metric (see page C37) |

**Cushion Cap End**

Use "C" only if cap end cushion is required (Series 2MA/2MAE only).
Not available on 2ML.

**Stroke Length**

Specify stroke length required in inches. [9]

1 Not available with Linear Position Sensor Option.

2 Bumper seals and bumpers not available with 2ML.

3 To order cylinders with sensors or Linear Position Sensor Option, one of these options are required.

4 Addition of standard bumper results in a 1/4" stroke loss per bumper, per end. For example, a 6" stroke cylinder with standard bumpers at both ends has an effective stroke of 5½". Bumper and bumper seal option available on 1½" to 4" bore cylinders only. To order a magnetic piston with standard bumpers, use the appropriate bumper code and place an 'S' in the Special Modification field with a note that reads "S = CPFS".

5 Reed or solid state sensors available with standard seals only.

6 For Linear Position Sensor Option, please include the following information for the Special Modification notes:

a. Sensor part number (see page C43)
b. Sensor position
c. Port position (if other than position 1)
d. Length of stop tubing, gross stroke and net stroke (if required)

7 Review Piston Rod Selection Chart, Section K on page C15 to determine proper piston rod diameter.

8 For additional information regarding this style, refer to page C36.

9 If a stop tube is required, specify gross stroke (net stroke plus stop tube) and place an "S" for special in the Special Modification field.

**How to Order 2MA Series Cylinders with Sensors:**

Sensors are not mounted to the cylinder prior to shipment. When ordering a cylinder to accommodate a sensor:

1. Derive a proper model number as shown in the table above.
2. Use 3 or 6 for Piston Type.
3. If using B, H or C for Piston Type, then place an "S" in the Special Modifications column of the model number and request a Magnetic Piston (CPFS).
4. Order sensors and brackets as separate line items. See Electronic Sensors section for part numbers and specifications.

Example:

Cylinder prepared for sensor only –
2.00 CJ2MA3U14AC 6.000



**Parker Hannifin Corporation**
Actuator Division
Wadsworth, Ohio USA

# Mounting Styles

## 2MA Series

C086

| Mounting Code | NFPA Mounting Style | Description | Available Bore Sizes | | | | |
|---|---|---|---|---|---|---|---|
| | | | 2MA | 2ML | 2MAE | 2MA-LPSO w/o Stop Tube | 2MA-LPSO w/Stop Tube |
| **KT**** | MDX0 | Double Rod End, No Mount** | 1¼ - 8 | 1½ - 8 | 1½ - 4 | — | — |
| **JB** | ME3 | Head Square | 8 | 8 | — | — | 8 |
| **HB** | ME4 | Cap Square | 8 | 8 | — | — | — |
| **J** | MF1 | Head Rectangular Flange | 1¼ - 6 | 1½ - 6 | 1½ - 4 | 2 - 6* | 2 - 6 |
| **H** | MF2 | Cap Rectangular Flange | 1¼ - 6 | 1½ - 6 | 1½ - 4 | 2 - 6* | 2 - 6* |
| **BB** | MP1 | Cap Fixed Clevis | 1½ - 8 | 1½ - 8 | 1½ - 4 | 2 - 8* | 2 - 8* |
| **BC** | MP2 | Cap Detachable Clevis | 1¼ - 8 | 1½ - 8 | 1½ - 4 | 2 - 8* | 2 - 8* |
| **BE** | MP4 | Cap Detachable Eye | 1¼ - 6 | 1½ - 6 | 1½ - 4 | 2 - 8* | 2 - 8* |
| **CB** | MS1 | Side End Angle | 1¼ - 8 | 1½ - 8 | 1½ - 4 | 2 - 8 | 2 - 8 |
| **C** | MS2 | Side Lug | 1½ - 8 | 1½ - 8 | 1½ - 4 | 2 - 8 | 2 - 8 |
| **F** | MS4 | Side Tap | 1¼ - 8 | 1½ - 8 | 1½ - 4 | 2 - 8 | 2 - 8 |
| **G** | MS7 | Side End Lug | 1¼ - 4 | 1½ - 4 | — | 2 - 8 | 2 - 8 |
| **D** | MT1 | Head Trunnion | 1½ - 8 | 1½ - 8 | — | 2 - 8 | 2 - 8 |
| **DB** | MT2 | Cap Trunnion | 1½ - 8 | 1½ - 8 | — | 2 - 8* | 2 - 8* |
| **DD** | MT4 | Intermediate Trunnion | 1¼ - 8 | 1½ - 8 | — | — | — |
| **T** | MX0 | No Mount | 1¼ - 8 | 1½ - 8 | — | 2 - 8 | 2 - 8 |
| **TD** | MX1 | Tie Rods Extended Both Ends | 1¼ - 8 | 1½ - 8 | 1½ - 4 | — | — |
| **TC** | MX2 | Tie Rods Extended Cap End | 1¼ - 8 | 1½ - 8 | 1½ - 4 | — | — |
| **TB** | MX3 | Tie Rods Extended Head End | 1¼ - 8 | 1½ - 8 | 1½ - 4 | — | 2 - 8 |
| **TE** | MX5 | Sleeve Nut | 1¼ - 8 | 1½ - 8 | — | — | 2 - 8 |
| **TEF** | N/A | Sleeve Nut with Side Tap | 1¼ - 8 | 1½ - 8 | — | — | 2 - 8 |

* May interfere with mounting. Please provide clearance for Linear Position Sensor overhang (see page C40).
** Double rod end cylinders can be ordered with head mountings, i.e. KJ (see page C34).

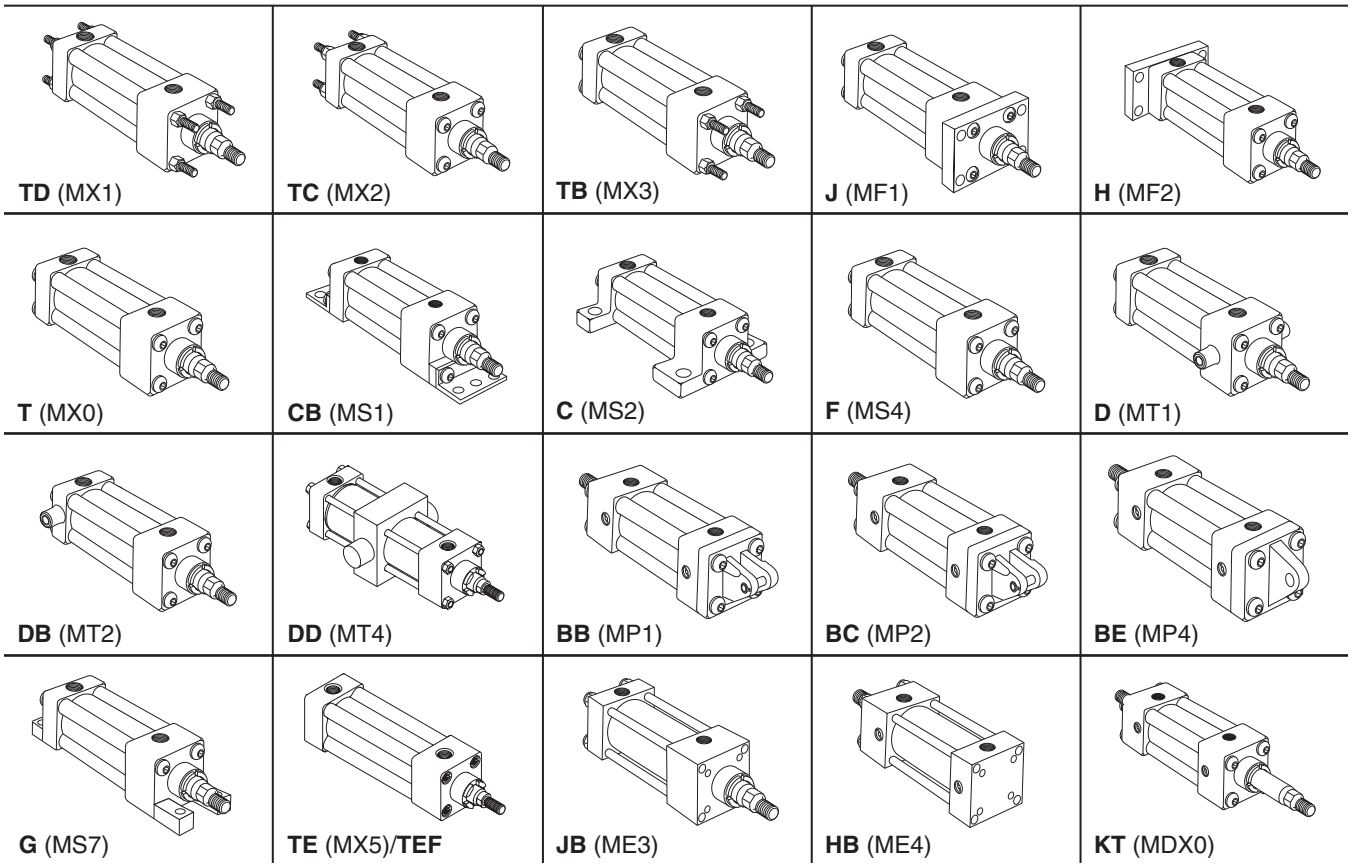




**Parker Hannifin Corporation**
Actuator Division
Wadsworth, Ohio USA

## Standard Specifications

- N.F.P.A. Interchangeable*
- Bore sizes – 1¼", 1½", 2", 2½", 3¼", 4", 5", 6", 8"
- Rod Diameters – 1/2", 5/8", 1",1$^3/_8$", 1¾"
- Rod Ends – three standard, specials to order
- Cushions – optional at either end or both ends of stroke
- Strokes – available in any practical stroke length
- 250 PSI Air Service (2MA, 2MAE)
  250 PSI Hydraulic Service (2ML), non-cushioned only
- Standard Fluid – Dry, filtered air
- Standard Temperature – -10°F to +165°F
- Fluorocarbon Seals for high temperature service – -10°F to +250°F (optional)
- Single rod end or double rod end
- Mounting styles – 20 standard
- Optional Bumper Seal for noise dampening available on 1½"- 4" bore sizes

**1¼" Bore size is not recognized by the NFPA as a standard.*

## Cylinder Weights – 2MA/2MAE/2ML Cylinders

| Bore (inch) | Rod (inch) | No Mount Single Rod 2MA, 2MAE, 2ML | | No Mount Double Rod | |
|---|---|---|---|---|---|
| | | Base Wt. (lbs.) | Per Inch (lbs.) | Base Wt. (lbs.) | Per Inch (lbs.) |
| 1$^1/_4$ | 0.500 | 1.32 | 0.14 | 1.63 | 0.19 |
| 1$^1/_2$ | 0.625 | 1.73 | 0.20 | 2.16 | 0.28 |
| 2 | 0.625 | 2.40 | 0.21 | 3.05 | 0.30 |
| | 1.00 | 2.99 | 0.35 | 4.34 | 0.58 |
| 2$^1/_2$ | 0.625 | 3.25 | 0.23 | 3.96 | 0.31 |
| | 1.00 | 4.06 | 0.37 | 5.74 | 0.60 |
| 3$^1/_4$ | 1.00 | 6.45 | 0.42 | 7.65 | 0.64 |
| | 1.375 | 7.93 | 0.62 | 11.46 | 1.05 |
| 4 | 1.00 | 8.80 | 0.49 | 10.32 | 0.71 |
| | 1.375 | 10.29 | 0.69 | 14.37 | 1.12 |
| 5 | 1.00 | 13.20 | 0.61 | 15.84 | 0.84 |
| | 1.375 | 14.72 | 0.81 | 18.89 | 1.24 |
| 6 | 1.375 | 20.50 | 0.87 | 25.65 | 1.30 |
| | 1.75 | 22.61 | 1.13 | 30.41 | 1.82 |
| 8 | 1.375 | 35.50 | 1.25 | 41.15 | 1.68 |
| | 1.75 | 37.63 | 1.51 | 45.90 | 2.20 |

## Mounting Weight Adders

| Bore (inch) | Weight (lbs) by Mounting Style | | | | | | | |
|---|---|---|---|---|---|---|---|---|
| | J, H | D, DB | BB | CB, G | DD | BE | C | BC |
| 1$^1/_4$ | 0.51 | N/A | N/A | 0.26 | 0.44 | 0.42 | N/A | 0.33 |
| 1$^1/_2$ | 0.51 | 0.50 | 0.15 | 0.36 | 1.70 | 0.23 | 0.15 | 0.20 |
| 2 | 0.76 | 0.50 | 0.26 | 065 | 2.38 | 0.32 | 0.15 | 0.29 |
| 2$^1/_2$ | 1.13 | 0.50 | 0.38 | 1.05 | 3.00 | 0.42 | 0.15 | 0.41 |
| 3$^1/_4$ | 2.76 | 0.50 | 0.98 | 1.38 | 5.35 | 1.26 | 0.35 | 1.06 |
| 4 | 4.05 | 0.50 | 1.35 | 2.20 | 6.75 | 1.62 | 0.35 | 1.49 |
| 5 | 6.46 | 0.50 | 1.20 | 4.29 | 8.77 | N/A | 0.57 | 2.41 |
| 6 | 10.74 | 1.22 | 2.91 | 5.88 | 15.52 | N/A | 0.69 | 11.38 |
| 8 | N/A | 1.22 | 2.91 | 7.84 | 25.01 | N/A | 0.67 | 17.31 |

## Standard Cushion Position

| Mounting Code | Position |
|---|---|
| All except D, DB, DD | 2 |
| D, DB, DD | 3 |

## Standard Port Sizes

| Bore | NPTF / BSPT | BSPP | SAE |
|---|---|---|---|
| 1$^1/_4$ | $^1/_4$ | G$^1/_4$ | 6 |
| 1$^1/_2$ | $^3/_8$ | G$^3/_8$ | 6 |
| 2 | $^3/_8$ | G$^3/_8$ | 6 |
| 2$^1/_2$ | $^3/_8$ | G$^3/_8$ | 6 |
| 3$^1/_4$ | $^1/_2$ | G$^1/_2$ | 10 |
| 4 | $^1/_2$ | G$^1/_2$ | 10 |
| 5 | $^1/_2$ | G$^1/_2$ | 10 |
| 6 | $^3/_4$ | G$^3/_4$ | 12 |
| 8 | $^3/_4$ | G$^3/_4$ | 12 |



**Parker Hannifin Corporation**
Actuator Division
Wadsworth, Ohio USA

## How to Select a Cylinder

Parker cylinders are available based on air or hydraulic operating pressure. The many styles, sizes and optional features available assure that your application requirements are precisely met. To select a Parker cylinder, follow these simple steps:

Step 1 - **Determine the correct cylinder bore size** necessary to achieve required force using the available operating pressure.

Step 2 - **Determine the series cylinder to use**, based on operating pressure.

Step 3 - **Turn to the appropriate cylinder selection section.** Select the mounting style that fits your installation needs. Determine the bore and rod sizes available for the model you select. Then complete model selection.

- Choose a rod end style and the desired rod end accessories.
- Size the cylinder to meet your application requirements.

Step 4 - **Consider the following conditions** which may require further modifications to the cylinder you have selected.

| Application Condition | Check the Following | |
|---|---|---|
| Quick Starts or Stops | Confirm that determined thrust is sufficient to accelerate or decelerate cylinder and load within prescribed distance. Optional cushions should be used to reduce shock during deceleration, check that peak pressures will be within tolerable limits. | |
| Long Push Stroke | Check whether stop tube is required to prevent excessive bearing loads and wear. | |
| High-column Loading Long Push Stroke | Determine if standard size piston rod is strong enough to accommodate intended load. See Application Engineering section for recommendations. | |
| Long Horizontal Stroke | Determine if standard size piston rod is strong enough to accommodate intended load. | |
| High Operating Temperatures | For temperatures between 165°F and 250°F use 2MA cylinder with high temperature seals. | |
| Options and Modifications | - Adjustable Cushions<br>- Piston Bumper Seals (1½" through 4")<br>- Piston Bumpers (1½" through 4")<br>- Port and Cushion Adjust Relocation<br>- Port Thread Styles<br>- Multiple Ports<br>- Adjustable Sensors<br>- Linear Position Sensing<br>- Double Rod End | - Rod End Modifications<br>- Stop Tube<br>- Mixed Mountings<br>- Shock Absorber on Cap End<br>- Round Tube and Tie Rod Construction<br>- LECTROFLUOR® Coating<br>- Air Cylinder/Valve Combination (ACVB)<br>- Par-Check for smooth hydraulic control<br>- Low Temperature Service (-40°F) |



**Parker Hannifin Corporation**
Actuator Division
Wadsworth, Ohio USA

## No Mount Basic
Style T
(NFPA MX0)

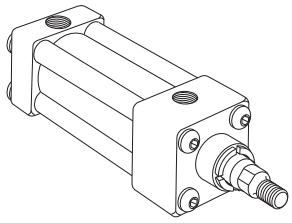

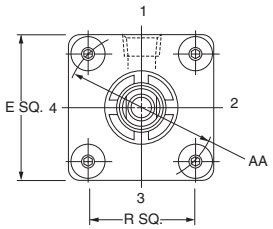


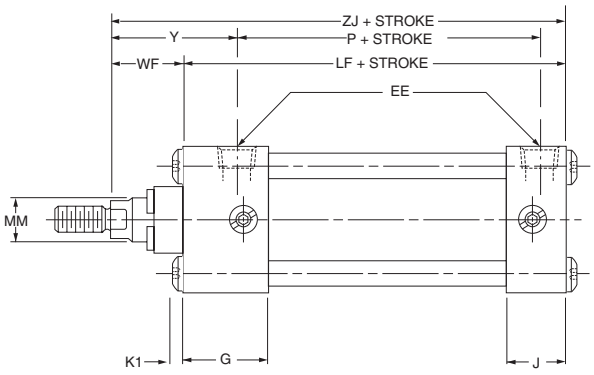


## Head Rectangular Flange
Style J*
(NFPA MF1)

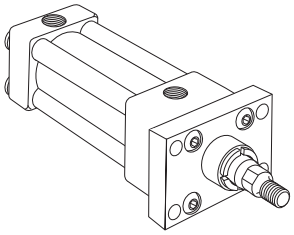

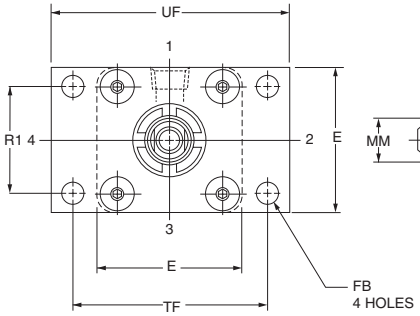


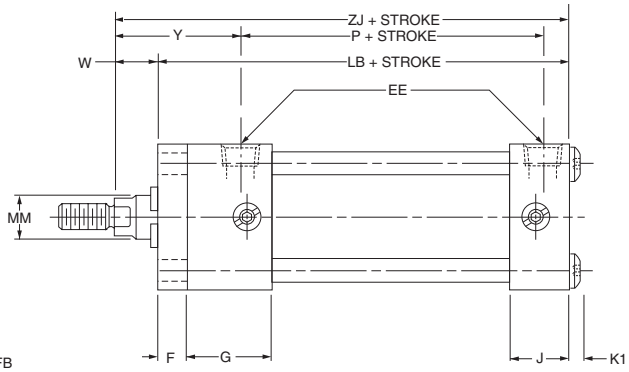


*Note: 1¼" bore flange has rounded corners.

## Cap Rectangular Flange
Style H*
(NFPA MF2)

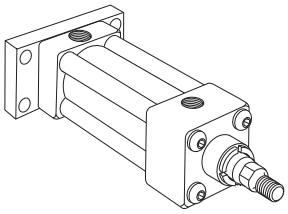

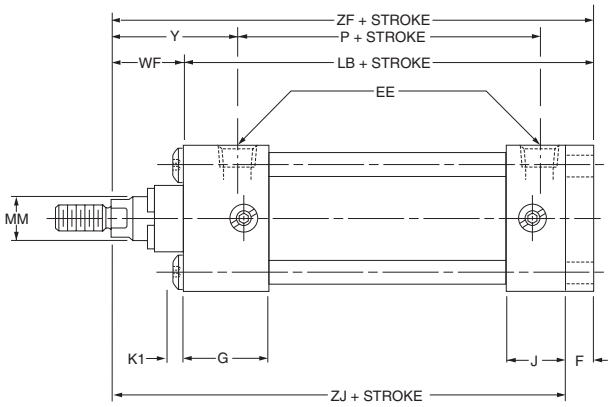


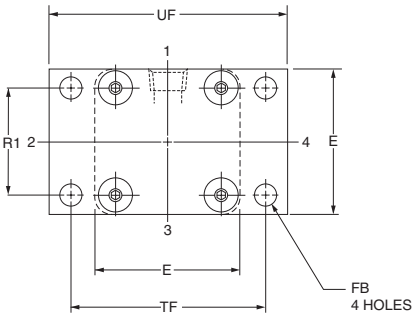


*Note: 1¼" bore flange has rounded corners.



**Parker Hannifin Corporation**
Actuator Division
Wadsworth, Ohio USA

## Rod End Dimensions—Basic Cylinder

Thread Style 4
(NFPA Style SM)
Small Male

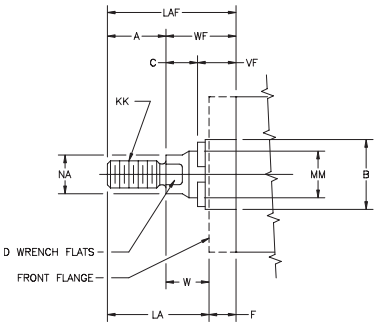


Thread Style 8
(NFPA Style IM)
Intermediate Male

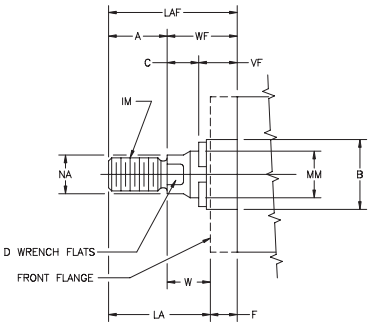


Thread Style 9
(NFPA Style SF)
Short Female

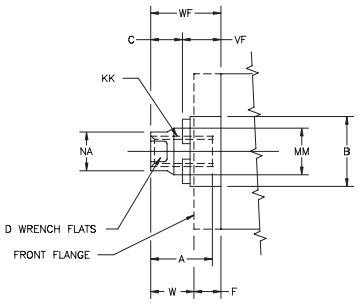


**"Special Thread" Style 3**

Special thread, extension, rod eye, blank, etc., are also available.

To order specify "Style 3" and give desired dimensions for CC or KK, A and W or WF.

If otherwise special, furnish dimensioned sketch.

## Table 1—Envelope and Mounting Dimensions

| Bore | AA | E | EE (NPTF) | F | FB | G | J | K1 | R | R1 | TF | UF | Add Stroke LB | Add Stroke LF | Add Stroke P |
|---|---|---|---|---|---|---|---|---|---|---|---|---|---|---|---|
| **1 1/4** | 1.81 | 1 53/64 | 1/4 | 25/64 | 1/4 | 1 5/16 | 13/16 | 1/8 | 1.28 | 1.26 | 2 33/64 | 3 5/32 | 3 45/64 | 3 5/16 | 2 3/16 |
| **1 1/2** | 2.02 | 2 | 3/8 | 3/8 | 5/16 | 1 7/16 | 15/16 | 1/8 | 1.43 | 1.43 | 2 3/4 | 3 3/8 | 4 | 3 5/8 | 2 5/16 |
| **2** | 2.6 | 2 1/2 | 3/8 | 3/8 | 3/8 | 1 7/16 | 15/16 | 5/32 | 1.84 | 1.84 | 3 3/8 | 4 1/8 | 4 | 3 5/8 | 2 5/16 |
| **2 1/2** | 3.1 | 3 | 3/8 | 3/8 | 3/8 | 1 7/16 | 15/16 | 5/32 | 2.19 | 2.19 | 3 7/8 | 4 5/8 | 4 1/8 | 3 3/4 | 2 3/8 |
| **3 1/4** | 3.9 | 3 3/4 | 1/2 | 5/8 | 7/16 | 1 11/16 | 1 3/16 | 3/16 | 2.76 | 2.76 | 4 11/16 | 5 1/2 | 4 7/8 | 4 1/4 | 2 5/8 |
| **4** | 4.7 | 4 1/2 | 1/2 | 5/8 | 7/16 | 1 11/16 | 1 3/16 | 3/16 | 3.32 | 3.32 | 5 7/16 | 6 1/4 | 4 7/8 | 4 1/4 | 2 5/8 |

## Table 2—Rod Dimensions

| Bore Size | Rod No. | Rod Dia. MM | Thread Style 8 CC | Thread Style 4 & 9 KK | A | B +0.00 -0.002 | C | D | LA | NA | VF | W | WF | Y | Add Stroke ZF | Add Stroke ZJ |
|---|---|---|---|---|---|---|---|---|---|---|---|---|---|---|---|---|
| **1 1/4** | 1 | 1/2 | 7/16-20 | 5/16-24 | 5/8 | .999 | 3/8 | 3/8 | 1 15/64 | 7/16 | 5/8 | 39/64 | 1 | 1 3/4 | 4 45/64 | 4 5/16 |
| **1 1/2** | 1 | 5/8 | 1/2-20 | 7/16-20 | 3/4 | 1.124 | 3/8 | 1/2 | 1 3/8 | 9/16 | 5/8 | 5/8 | 1 | 1 7/8 | 5 | 4 5/8 |
| | 2 | 1* | 7/8-14 | 3/4-16 | 1 1/8 | 1.499 | 5/8 | 7/8 | 2 1/8 | 15/16 | 3/4 | 1 | 1 3/8 | 2 1/4 | 5 3/8 | 5 |
| **2** | 1 | 5/8 | 1/2-20 | 7/16-20 | 3/4 | 1.124 | 3/8 | 1/2 | 1 3/8 | 9/16 | 5/8 | 5/8 | 1 | 1 7/8 | 5 | 4 5/8 |
| | 3 | 1 | 7/8-14 | 3/4-16 | 1 1/8 | 1.499 | 5/8 | 7/8 | 2 1/8 | 15/16 | 3/4 | 1 | 1 3/8 | 2 1/4 | 5 3/8 | 5 |
| **2 1/2** | 1 | 5/8 | 1/2-20 | 7/16-20 | 3/4 | 1.124 | 3/8 | 1/2 | 1 3/8 | 9/16 | 5/8 | 5/8 | 1 | 1 15/16 | 5 1/8 | 4 3/4 |
| | 3 | 1 | 7/8-14 | 3/4-16 | 1 1/8 | 1.499 | 5/8 | 7/8 | 2 1/8 | 15/16 | 3/4 | 1 | 1 3/8 | 2 5/16 | 5 1/2 | 5 1/8 |
| **3 1/4** | 1 | 1 | 7/8-14 | 3/4-16 | 1 1/8 | 1.499 | 5/8 | 7/8 | 1 7/8 | 15/16 | 3/4 | 3/4 | 1 3/8 | 2 7/16 | 6 1/4 | 5 5/8 |
| | 3 | 1 3/8 | 1 1/4-12 | 1-14 | 1 5/8 | 1.999 | 7/8 | 1 1/8 | 2 5/8 | 1 5/16 | 3/4 | 1 | 1 5/8 | 2 11/16 | 6 1/2 | 5 7/8 |
| **4** | 1 | 1 | 7/8-14 | 3/4-16 | 1 1/8 | 1.499 | 5/8 | 7/8 | 1 7/8 | 15/16 | 3/4 | 3/4 | 1 3/8 | 2 7/16 | 6 1/4 | 5 5/8 |
| | 3 | 1 3/8 | 1 1/4-12 | 1-14 | 1 5/8 | 1.999 | 7/8 | 1 1/8 | 2 5/8 | 1 5/16 | 3/4 | 1 | 1 5/8 | 2 11/16 | 6 1/2 | 5 7/8 |

*Cushion not available head end.

**Table 3– Envelope and Mounting Dimensions**



**Parker Hannifin Corporation**
Actuator Division
Wadsworth, Ohio USA

C086

## Tie Rods Extended Head End Mount
Style TB
(NFPA MX3)

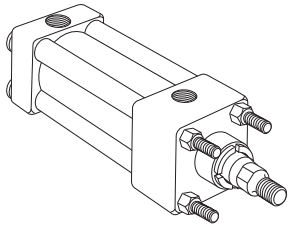

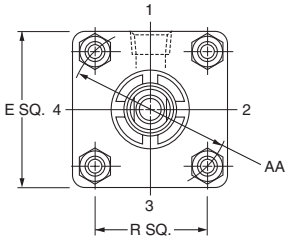


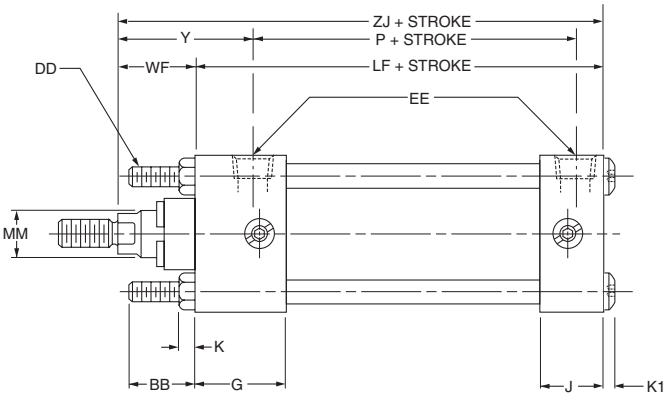


## Tie Rods Extended Cap End Mount
Style TC
(NFPA MX2)

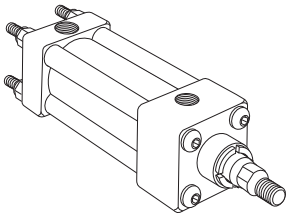

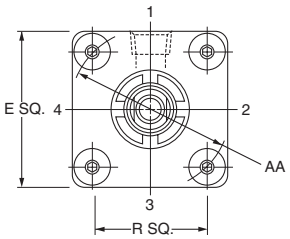


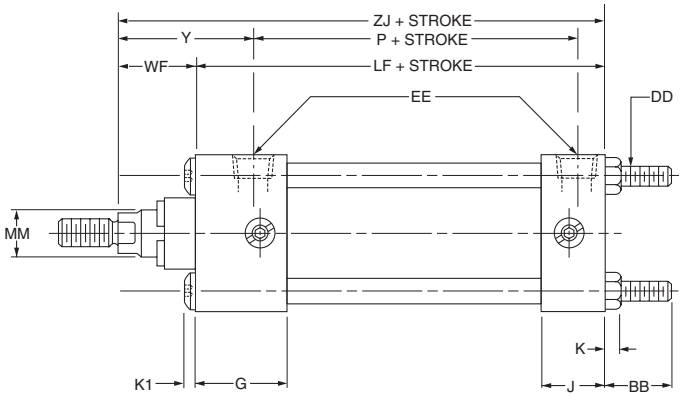


## Tie Rods Extended Both Ends Mount
Style TD
(NFPA MX1)

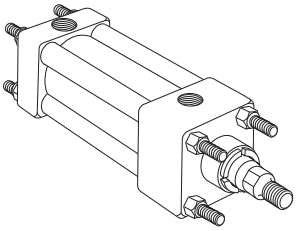

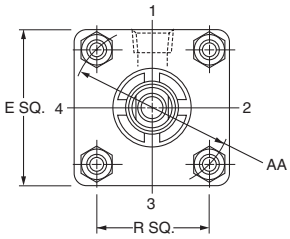


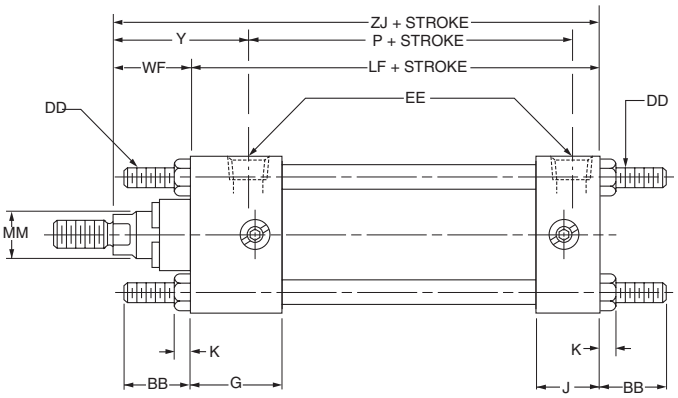


## Sleeve Nut Mount
Style TE
(NFPA MX5)

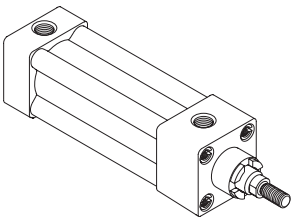

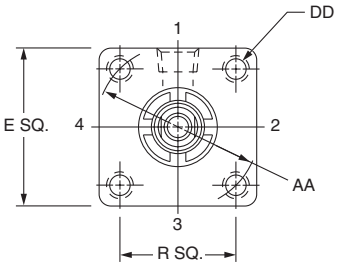


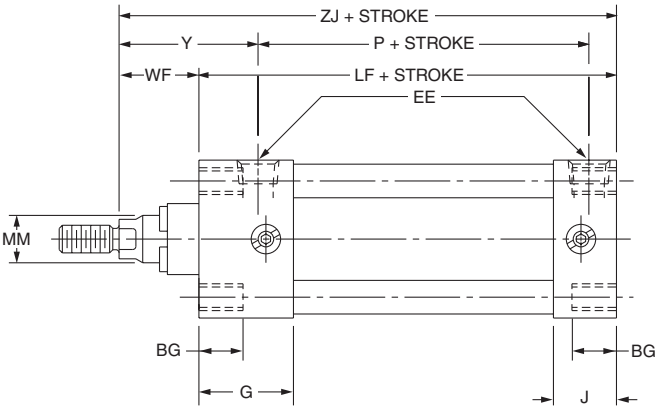




**Parker Hannifin Corporation**
Actuator Division
Wadsworth, Ohio USA

## Rod End Dimensions—Basic Cylinder

Thread Style 4
(NFPA Style SM)
Small Male

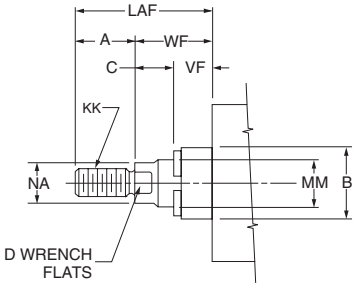


Thread Style 8
(NFPA Style IM)
Intermediate Male

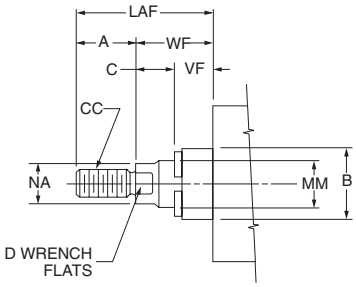


Thread Style 9
(NFPA Style SF)
Short Female

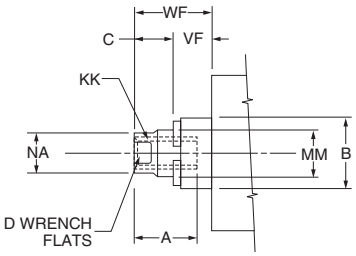


**"Special Thread" Style 3**

Special thread, extension, rod eye, blank, etc., are also available.

To order specify "Style 3" and give desired dimensions for CC or KK, A and W or WF.

If otherwise special, furnish dimensioned sketch.

## Table 1—Envelope and Mounting Dimensions

| Bore | AA | BB | BG | DD | E | EE (NPTF) | G | J | K | K1 | R | Add Stroke LF | Add Stroke P |
|---|---|---|---|---|---|---|---|---|---|---|---|---|---|
| **1 1/4** | 1.81 | 1 | .45 | 1/4-28 | 1 53/64 | 1/4 | 1 5/16 | 13/16 | 7/32 | 1/8 | 1.28 | 3 5/16 | 2 3/16 |
| **1 1/2** | 2.02 | 1 | .45 | 1/4-28 | 2 | 3/8 | 1 7/16 | 15/16 | 1/4 | 1/8 | 1.43 | 3 5/8 | 2 5/16 |
| **2** | 2.6 | 1 1/8 | .48 | 5/16-24 | 2 1/2 | 3/8 | 1 7/16 | 15/16 | 5/16 | 5/32 | 1.84 | 3 5/8 | 2 5/16 |
| **2 1/2** | 3.1 | 1 1/8 | .48 | 5/16-24 | 3 | 3/8 | 1 7/16 | 15/16 | 5/16 | 5/32 | 2.19 | 3 3/4 | 2 3/8 |
| **3 1/4** | 3.9 | 1 3/8 | .50 | 3/8-24 | 3 3/4 | 1/2 | 1 11/16 | 1 3/16 | 3/8 | 3/16 | 2.76 | 4 1/4 | 2 5/8 |
| **4** | 4.7 | 1 3/8 | .50 | 3/8-24 | 4 1/2 | 1/2 | 1 11/16 | 1 3/16 | 3/8 | 3/16 | 3.32 | 4 1/4 | 2 5/8 |

## Table 2—Rod Dimensions

## Table 3– Envelope and Mounting Dimensions

| Bore Size | Rod No. | Rod Dia. MM | Thread Style 8 CC | Thread Style 4 & 9 KK | A | B +0.00 -0.002 | C | D | LAF | NA | VF | W | WF | Y | Add Stroke ZJ |
|---|---|---|---|---|---|---|---|---|---|---|---|---|---|---|---|
| **1 1/4** | 1 | 1/2 | 7/16-20 | 5/16-24 | 5/8 | .999 | 3/8 | 3/8 | 1 5/8 | 7/16 | 5/8 | 39/64 | 1 | 1 3/4 | 4 5/16 |
| **1 1/2** | 1 | 5/8 | 1/2-20 | 7/16-20 | 3/4 | 1.124 | 3/8 | 1/2 | 1 3/4 | 9/16 | 5/8 | 5/8 | 1 | 1 7/8 | 4 5/8 |
| | 2 | 1* | 7/8-14 | 3/4-16 | 1 1/8 | 1.499 | 5/8 | 7/8 | 2 1/2 | 15/16 | 3/4 | 1 | 1 3/8 | 2 1/4 | 5 |
| **2** | 1 | 5/8 | 1/2-20 | 7/16-20 | 3/4 | 1.124 | 3/8 | 1/2 | 1 3/4 | 9/16 | 5/8 | 5/8 | 1 | 1 7/8 | 4 5/8 |
| | 3 | 1 | 7/8-14 | 3/4-16 | 1 1/8 | 1.499 | 5/8 | 7/8 | 2 1/2 | 15/16 | 3/4 | 1 | 1 3/8 | 2 1/4 | 5 |
| **2 1/2** | 1 | 5/8 | 1/2-20 | 7/16-20 | 3/4 | 1.124 | 3/8 | 1/2 | 1 3/4 | 9/16 | 5/8 | 5/8 | 1 | 1 15/16 | 4 3/4 |
| | 3 | 1 | 7/8-14 | 3/4-16 | 1 1/8 | 1.499 | 5/8 | 7/8 | 2 1/2 | 15/16 | 3/4 | 1 | 1 3/8 | 2 5/16 | 5 1/8 |
| **3 1/4** | 1 | 1 | 7/8-14 | 3/4-16 | 1 1/8 | 1.499 | 5/8 | 7/8 | 2 1/2 | 15/16 | 3/4 | 3/4 | 1 3/8 | 2 7/16 | 5 5/8 |
| | 3 | 1 3/8 | 1 1/4-12 | 1-14 | 1 5/8 | 1.999 | 7/8 | 1 1/8 | 3 1/4 | 1 5/16 | 3/4 | 1 | 1 5/8 | 2 11/16 | 5 7/8 |
| **4** | 1 | 1 | 7/8-14 | 3/4-16 | 1 1/8 | 1.499 | 5/8 | 7/8 | 2 1/2 | 15/16 | 3/4 | 3/4 | 1 3/8 | 2 7/16 | 5 5/8 |
| | 3 | 1 3/8 | 1 1/4-12 | 1-14 | 1 5/8 | 1.999 | 7/8 | 1 1/8 | 3 1/4 | 1 5/16 | 3/4 | 1 | 1 5/8 | 2 11/16 | 5 7/8 |

*Cushion not available head end.



**Parker Hannifin Corporation**
Actuator Division
Wadsworth, Ohio USA

## Side Lug Mount*

Style C
(NFPA MS2)

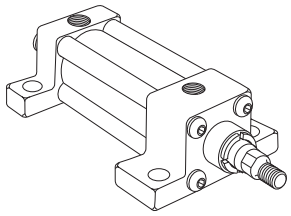

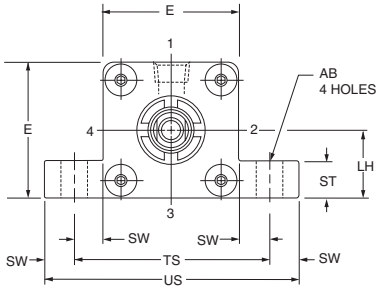


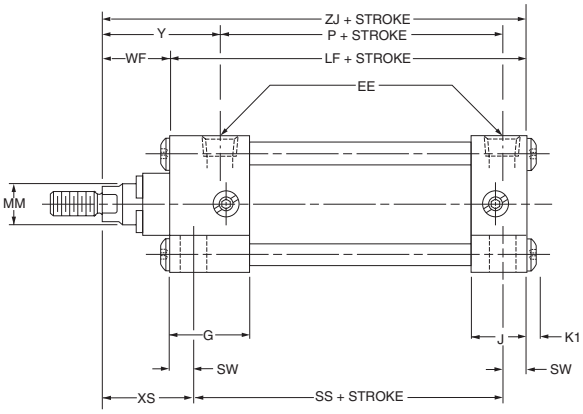


*Not available for 1¼" bore.

## Side Tap Mount*

Style F
(NFPA MS4)

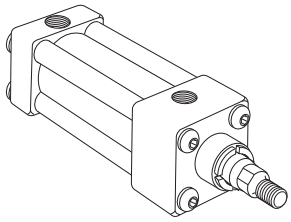

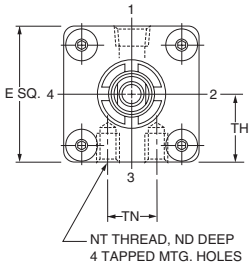


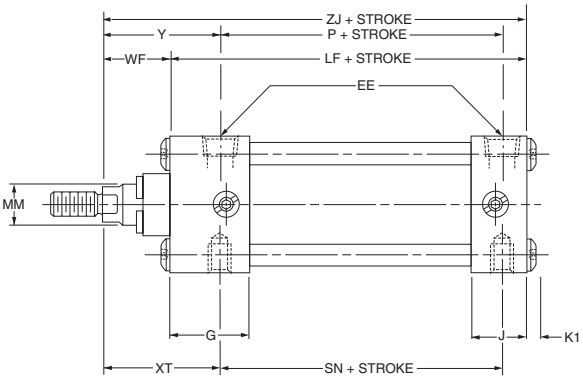


*Not available for 1½" bore with 1" rod.



**Parker Hannifin Corporation**
Actuator Division
Wadsworth, Ohio USA

C086

## Rod End Dimensions—Basic Cylinder

Thread Style 4
(NFPA Style SM)
Small Male

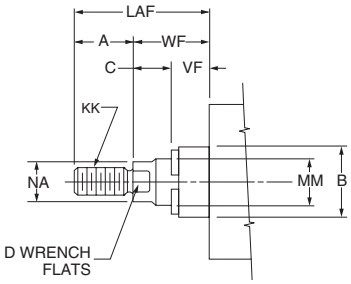


Thread Style 8
(NFPA Style IM)
Intermediate Male

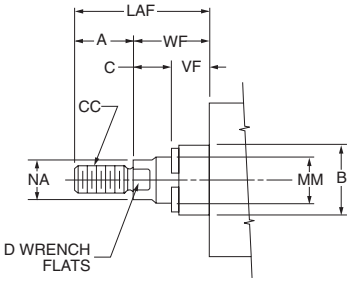


Thread Style 9
(NFPA Style SF)
Short Female

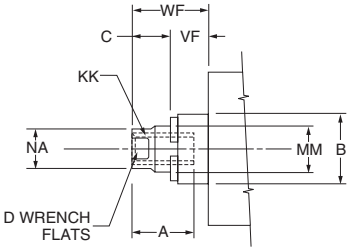


**"Special Thread" Style 3**

Special thread, extension, rod eye, blank, etc., are also available.

To order specify "Style 3" and give desired dimensions for CC or KK, A and WF.

If otherwise special, furnish dimensioned sketch.

## Table 1 – Envelope and Mounting Dimensions

| Bore | AB | E | EE NPTF | F | G | J | K1 | LH ±0.003 | NT | ST | SW | TH ±0.003 | TN | TS | US | Add Stroke LF | P | SN | SS |
|---|---|---|---|---|---|---|---|---|---|---|---|---|---|---|---|---|---|---|---|
| **1 1/4** | .276 | 1 53/64 | 1/4 | — | 1 5/16 | 13/16 | 1/8 | ▲ | 1/4-20* | ▲ | ▲ | .908 | — | ▲ | ▲ | 3 5/16 | 2 3/16 | 1 15/16 | ▲ |
| **1 1/2** | 7/16 | 2 | 3/8 | 3/8 | 1 7/16 | 15/16 | 1/8 | .993 | 1/4-20 | 1/2 | 3/8 | .993 | 5/8 | 2 3/4 | 3 1/2 | 3 5/8 | 2 5/16 | 2 1/4 | 2 7/8 |
| **2** | 7/16 | 2 1/2 | 3/8 | 3/8 | 1 7/16 | 15/16 | 5/32 | 1.243 | 5/16-18 | 1/2 | 3/8 | 1.243 | 7/8 | 3 1/4 | 4 | 3 5/8 | 2 5/16 | 2 1/4 | 2 7/8 |
| **2 1/2** | 7/16 | 3 | 3/8 | 3/8 | 1 7/16 | 15/16 | 5/32 | 1.493 | 3/8-16 | 1/2 | 3/8 | 1.493 | 1 1/4 | 3 3/4 | 4 1/2 | 3 3/4 | 2 3/8 | 2 3/8 | 3 |
| **3 1/4** | 9/16 | 3 3/4 | 1/2 | 5/8 | 1 11/16 | 1 3/16 | 3/16 | 1.868 | 1/2-13 | 3/4 | 1/2 | 1.868 | 1 1/2 | 4 3/4 | 5 3/4 | 4 1/4 | 2 5/8 | 2 5/8 | 3 1/4 |
| **4** | 9/16 | 4 1/2 | 1/2 | — | 1 11/16 | 1 3/16 | 3/16 | 2.243 | 1/2-13 | 3/4 | 1/2 | 2.243 | 2 1/16 | 5 1/2 | 6 1/2 | 4 1/4 | 2 5/8 | 2 5/8 | 3 1/4 |

▲ Mounting style C is not available in 1 1/4" bore.

* Mounting style F for 1 1/4" bore only is furnished with two mounting holes (one each end).

## Table 2 – Rod Dimensions

| Bore Size | Rod No. | Rpd Dia. MM | Style 8 CC | Style 4 & 9 KK | A | B +0.000 -0.002 | C | D | LAF | NA | VF | WF | Y | ND | XS | XT | Add Stroke ZJ |
|---|---|---|---|---|---|---|---|---|---|---|---|---|---|---|---|---|---|
| **1 1/4** | 1 | 1/2 | 7/16-20 | 5/16-24 | 5/8 | .999 | 3/8 | 3/8 | 1 5/8 | 7/16 | 5/8 | 1 | 1 3/4 | 1/4 | ▲ | 1 15/16 | 4 5/16 |
| **1 1/2** | 1 | 5/8 | 1/2-20 | 7/16-20 | 3/4 | 1.124 | 3/8 | 1/2 | 1 3/4 | 9/16 | 5/8 | 1 | 1 7/8 | 3/8 | 1 3/8 | 1 15/16 | 4 5/8 |
| | 2 | 1* | 7/8-14 | 3/4-16 | 1 1/8 | 1.499 | 5/8 | 7/8 | 2 1/2 | 15/16 | 3/4 | 1 3/8 | 2 1/4 | — | 1 3/4 | — | 5 |
| **2** | 1 | 5/8 | 1/2-20 | 7/16-20 | 3/4 | 1.124 | 3/8 | 1/2 | 1 3/4 | 9/16 | 5/8 | 1 | 1 7/8 | 7/16 | 1 3/8 | 1 15/16 | 4 5/8 |
| | 3 | 1 | 7/8-14 | 3/4-16 | 1 1/8 | 1.499 | 5/8 | 7/8 | 2 1/2 | 15/16 | 3/4 | 1 3/8 | 2 1/4 | 3/8 | 1 3/4 | 2 5/16 | 5 |
| **2 1/2** | 1 | 5/8 | 1/2-20 | 7/16-20 | 3/4 | 1.124 | 3/8 | 1/2 | 1 3/4 | 9/16 | 5/8 | 1 | 1 15/16 | 5/8 | 1 3/8 | 1 15/16 | 4 3/4 |
| | 3 | 1 | 7/8-14 | 3/4-16 | 1 1/8 | 1.499 | 5/8 | 7/8 | 2 1/2 | 15/16 | 3/4 | 1 3/8 | 2 5/16 | 5/8 | 1 3/4 | 2 5/16 | 5 1/8 |
| **3 1/4** | 1 | 1 | 7/8-14 | 3/4-16 | 1 1/8 | 1.499 | 5/8 | 7/8 | 2 1/2 | 15/16 | 3/4 | 1 3/8 | 2 7/16 | 3/4 | 1 7/8 | 2 7/16 | 5 5/8 |
| | 3 | 1 3/8 | 1 1/4-12 | 1-14 | 1 5/8 | 1.999 | 7/8 | 1 1/8 | 3 1/4 | 1 5/16 | 3/4 | 1 5/8 | 2 11/16 | 3/4 | 2 1/8 | 2 11/16 | 5 7/8 |
| **4** | 1 | 1 | 7/8-14 | 3/4-16 | 1 1/8 | 1.499 | 5/8 | 7/8 | 2 1/2 | 15/16 | 3/4 | 1 3/8 | 2 7/16 | 3/4 | 1 7/8 | 2 7/16 | 5 5/8 |
| | 3 | 1 3/8 | 1 1/4-12 | 1-14 | 1 5/8 | 1.999 | 7/8 | 1 1/8 | 3 1/4 | 1 5/16 | 3/4 | 1 5/8 | 2 11/16 | 3/4 | 2 1/8 | 2 11/16 | 5 7/8 |

* Cushion not available head end.

▲ Mounting style C is not available in 1 1/4" bore.

## Table 3 – Envelope and Mounting Dimensions



**Parker Hannifin Corporation**
Actuator Division
Wadsworth, Ohio USA

## Side End Angle Mount

Style CB*
(NFPA MS1)

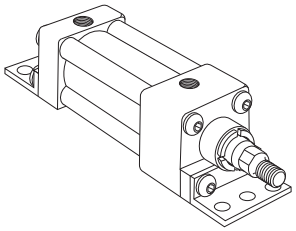

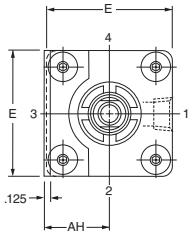


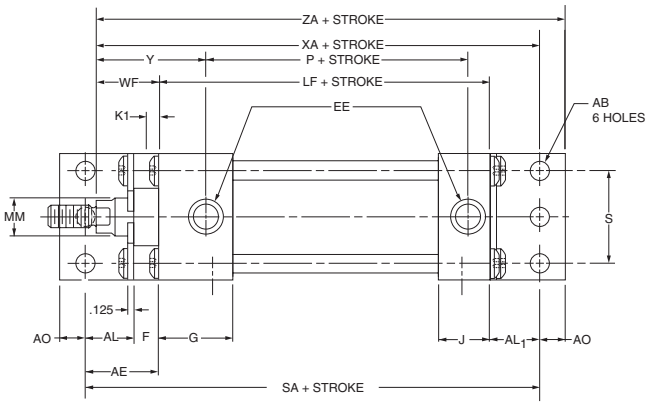


*Maximum recommended pressure of 150 PSI.

## Side End Lug Mount

Style G
(NFPA MS7)

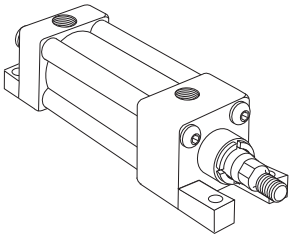

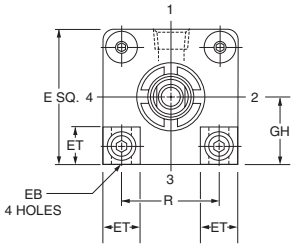


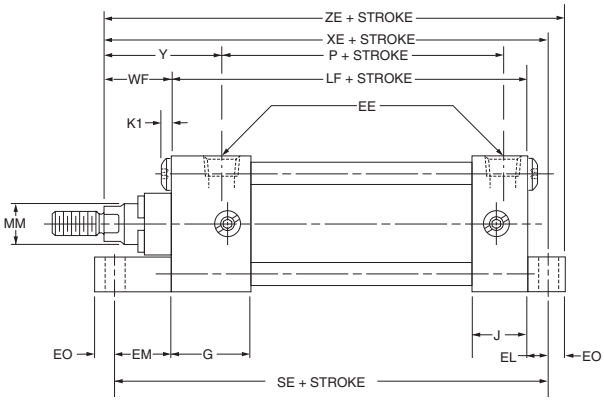




**Parker Hannifin Corporation**
Actuator Division
Wadsworth, Ohio USA

C086

## Rod End Dimensions—Basic Cylinder

Thread Style 4
(NFPA Style SM)
Small Male

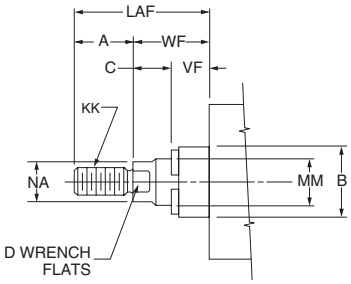


Thread Style 8
(NFPA Style IM)
Intermediate Male

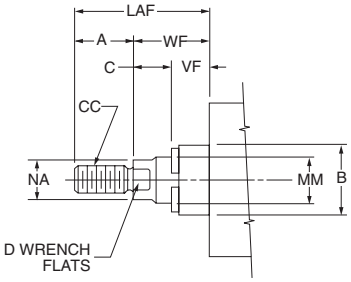


Thread Style 9
(NFPA Style SF)
Short Female

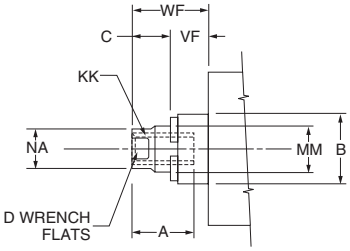


**"Special Thread" Style 3**

Special thread, extension, rod eye, blank, etc., are also available.

To order specify "Style 3" and give desired dimensions for CC or KK, A and WF.

If otherwise special, furnish dimensioned sketch.

## Table 1—Envelope and Mounting Dimensions

| Bore | AB | AE | AH | AL | AL1 | AO | E | EE NPTF | EB | EL | EM | EO | ET | F | G | GH ±0.003 | J | K1 | R | S | Add Stroke LF | P | SA | SE |
|---|---|---|---|---|---|---|---|---|---|---|---|---|---|---|---|---|---|---|---|---|---|---|---|---|
| **1 1/4** | .276* | — | 1 17/64 | 15/16 | 15/16 | 9/32 | 1 53/64 | 1/4 | 9/32 | 3/4 | 1 1/8 | 1/4 | 9/16 | — | 1 5/16 | .908 | 13/16 | 1/8 | 1.28 | 1 17/64 | 3 5/16 | 2 3/16 | 5 3/16 | 5 3/16 |
| **1 1/2** | 7/16 | 1 3/8 | 1 3/16 | 1 | 1 | 3/8 | 2 | 3/8 | 9/32 | 3/4 | 1 1/8 | 1/4 | 9/16 | 3/8 | 1 7/16 | .993 | 15/16 | 1/8 | 1.43 | 1 1/4 | 3 5/8 | 2 5/16 | 6 | 5 1/2 |
| **2** | 7/16 | 1 3/8 | 1 7/16 | 1 | 1 | 3/8 | 2 1/2 | 3/8 | 11/32 | 15/16 | 1 5/16 | 5/16 | 11/16 | 3/8 | 1 7/16 | 1.243 | 15/16 | 5/32 | 1.84 | 1 3/4 | 3 5/8 | 2 5/16 | 6 | 5 7/8 |
| **2 1/2** | 7/16 | 1 3/8 | 1 5/8 | 1 | 1 | 3/8 | 3 | 3/8 | 11/32 | 1 1/16 | 1 7/16 | 5/16 | 13/16 | 3/8 | 1 7/16 | 1.493 | 15/16 | 5/32 | 2.19 | 2 1/4 | 3 3/4 | 2 3/8 | 6 1/8 | 6 1/4 |
| **3 1/4** | 9/16 | 1 7/8 | 1 15/16 | 1 1/4 | 1 1/4 | 1/2 | 3 3/4 | 1/2 | 13/32 | 7/8 | 1 1/2 | 3/8 | 1 | 5/8 | 1 11/16 | 1.868 | 1 3/16 | 3/16 | 2.76 | 2 3/4 | 4 1/4 | 2 5/8 | 7 3/8 | 6 5/8 |
| **4** | 9/16 | — | 2 1/4 | 1 7/8 | 1 1/4 | 1/2 | 4 1/2 | 1/2 | 13/32 | 1 | 1 5/8 | 3/8 | 1 3/16 | — | 1 11/16 | 2.243 | 1 3/16 | 3/16 | 3.32 | 3 1/2 | 4 1/4 | 2 5/8 | 7 3/8 | 6 7/8 |

* Mounting style CB for 1 1/4" bore only is furnished with four mounting holes (two each end). Center holes omitted.

## Table 2—Rod Dimensions

## Table 3– Envelope and Mounting Dimensions

| Bore Size | Rod No. | Rod Dia. MM | Thread Style 8 CC | Thread Style 4 & 9 KK | A | B +0.000 -0.002 | C | D | LAF | NA | VF | WF | Y | Add Stroke XA | XE | ZA | ZE |
|---|---|---|---|---|---|---|---|---|---|---|---|---|---|---|---|---|---|
| **1 1/4** | 1 | 1/2 | 7/16-20 | 5/16-24 | 5/8 | .999 | 3/8 | 3/8 | 1 5/8 | 7/16 | 5/8 | 1 | 1 3/4 | 5 1/4 | 5 1/16 | 5 17/32 | 5 5/16 |
| **1 1/2** | 1 | 5/8 | 1/2-20 | 7/16-20 | 3/4 | 1.124 | 3/8 | 1/2 | 1 3/4 | 9/16 | 5/8 | 1 | 1 7/8 | 5 5/8 | 5 3/8 | 6 | 5 5/8 |
| | 2 | 1* | 7/8-14 | 3/4-16 | 1 1/8 | 1.499 | 5/8 | 7/8 | 2 1/2 | 15/16 | 3/4 | 1 3/8 | 2 1/4 | 6 | — | 6 3/8 | — |
| **2** | 1 | 5/8 | 1/2-20 | 7/16-20 | 3/4 | 1.124 | 3/8 | 1/2 | 1 3/4 | 9/16 | 5/8 | 1 | 1 7/8 | 5 5/8 | 5 9/16 | 6 | 5 7/8 |
| | 3 | 1 | 7/8-14 | 3/4-16 | 1 1/8 | 1.499 | 5/8 | 7/8 | 2 1/2 | 15/16 | 3/4 | 1 3/8 | 2 1/4 | 6 | 5 15/16 | 6 3/8 | 6 1/4 |
| **2 1/2** | 1 | 5/8 | 1/2-20 | 7/16-20 | 3/4 | 1.124 | 3/8 | 1/2 | 1 3/4 | 9/16 | 5/8 | 1 | 1 15/16 | 5 3/4 | 5 13/16 | 6 1/8 | 6 1/8 |
| | 3 | 1 | 7/8-14 | 3/4-16 | 1 1/8 | 1.499 | 5/8 | 7/8 | 2 1/2 | 15/16 | 3/4 | 1 3/8 | 2 5/16 | 6 1/8 | 6 3/16 | 6 1/2 | 6 1/2 |
| **3 1/4** | 1 | 1 | 7/8-14 | 3/4-16 | 1 1/8 | 1.499 | 5/8 | 7/8 | 2 1/2 | 15/16 | 3/4 | 1 3/8 | 2 7/16 | 6 7/8 | 6 1/2 | 7 3/8 | 6 7/8 |
| | 3 | 1 3/8 | 1 1/4-12 | 1-14 | 1 5/8 | 1.999 | 7/8 | 1 1/8 | 3 1/4 | 1 5/16 | 3/4 | 1 5/8 | 2 11/16 | 7 1/8 | 6 3/4 | 7 5/8 | 7 1/8 |
| **4** | 1 | 1 | 7/8-14 | 3/4-16 | 1 1/8 | 1.499 | 5/8 | 7/8 | 2 1/2 | 15/16 | 3/4 | 1 3/8 | 2 7/16 | 6 7/8 | 6 5/8 | 7 3/8 | 7 |
| | 3 | 1 3/8 | 1 1/4-12 | 1-14 | 1 5/8 | 1.999 | 7/8 | 1 1/8 | 3 1/4 | 1 5/16 | 3/4 | 1 5/8 | 2 11/16 | 7 1/8 | 6 7/8 | 7 5/8 | 7 1/4 |

* Cushion not available head end.



**Parker Hannifin Corporation**
Actuator Division
Wadsworth, Ohio USA

C086

## Cap Fixed Clevis Mount

Style BB
(NFPA MP1)
1½" – 4" Bore Only

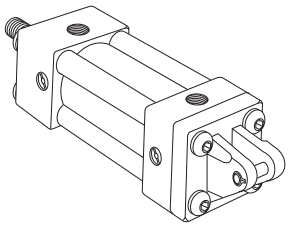

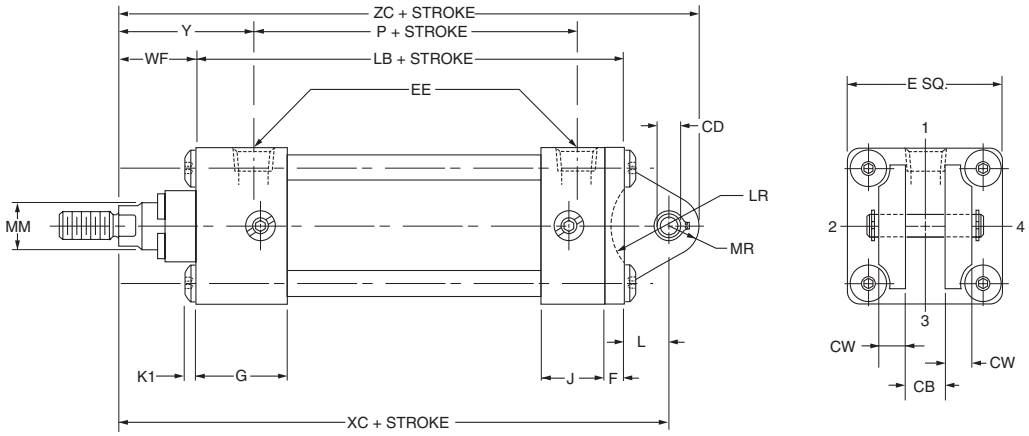


For maximum swivel angle with rear mounting plate for "BB" mounting, see 2MA Series cylinder accessories.

## Cap Detachable Clevis Mount

Style BC
(NFPA MP2)

1¼" Bore

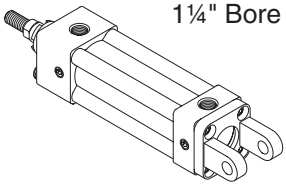

1½" – 4" Bore

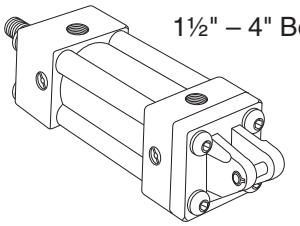

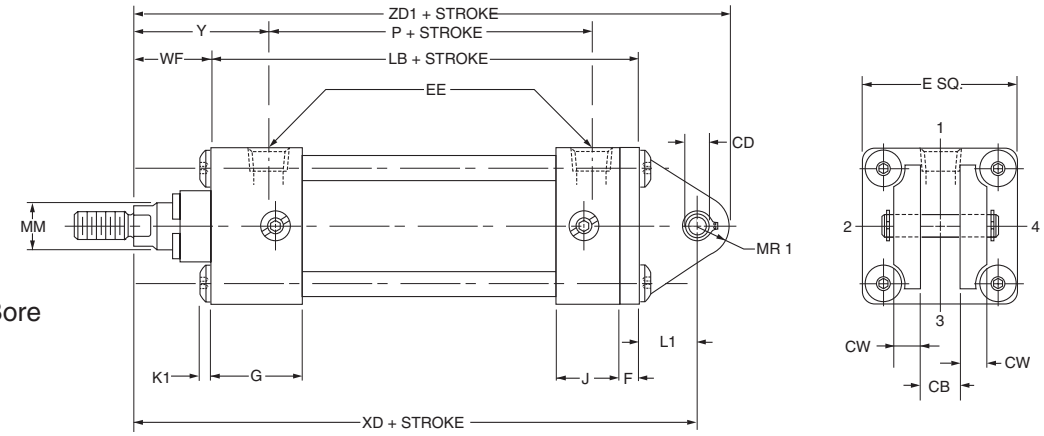


## Cap Detachable Eye Mount

Style BE
(NFPA MP4)

1¼" Bore

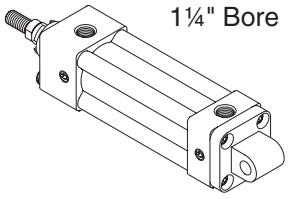

1½" – 4" Bore

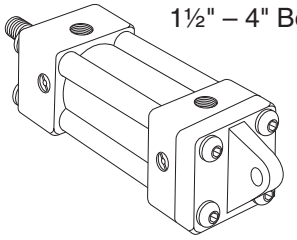

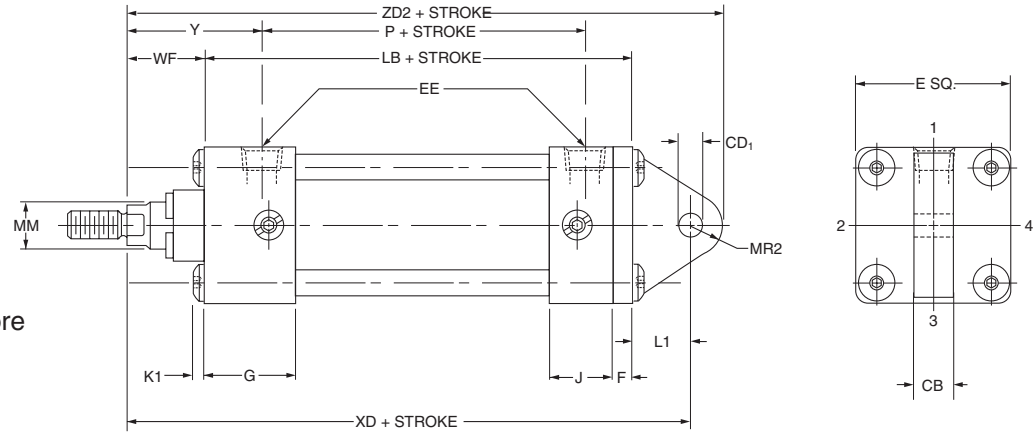




**Parker Hannifin Corporation**
Actuator Division
Wadsworth, Ohio USA

## Rod End Dimensions—Basic Cylinder

Thread Style 4
(NFPA Style SM)
Small Male

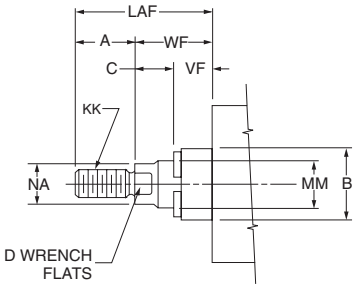


Thread Style 8
(NFPA Style IM)
Intermediate Male

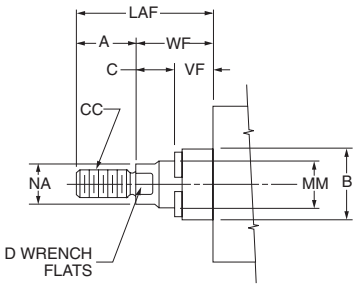


Thread Style 9
(NFPA Style SF)
Short Female

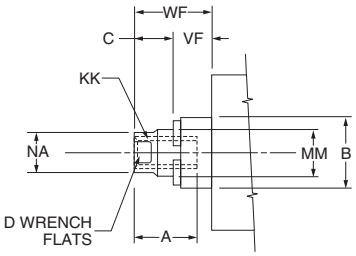


**"Special Thread" Style 3**

Special thread, extension, rod eye, blank, etc., are also available.

To order specify "Style 3" and give desired dimensions for CC or KK, A and W or WF.

If otherwise special, furnish dimensioned sketch.

## Table 1—Envelope and Mounting Dimensions

| Bore | CB | CD +0.000 -0.002 | $CD_1$ +0.002 +0.004 | CW | E | EE (NPTF) | F | G | J | K1 | L | L1 | LR | MR | MR1 | MR2 | Add Stroke LB | Add Stroke P |
|---|---|---|---|---|---|---|---|---|---|---|---|---|---|---|---|---|---|---|
| **1 1/4** | 1 1/64 | .393 | .392 | 3/8 | 1 53/64 | 1/4 | 25/64 | 1 5/16 | 13/16 | 1/8 | ▲ | 15/32 | ▲ | ▲ | 25/64 | 25/64 | 3 45/64 | 2 3/16 |
| **1 1/2** | 3/4 | .501 | .500 | 1/2 | 2 | 3/8 | 3/8 | 1 7/16 | 15/16 | 1/8 | 3/8 | 3/4 | 3/4 | 5/8 | 1/2 | 5/8 | 4 | 2 5/16 |
| **2** | 3/4 | .501 | .500 | 1/2 | 2 1/2 | 3/8 | 3/8 | 1 7/16 | 15/16 | 5/32 | 3/8 | 3/4 | 3/4 | 5/8 | 1/2 | 5/8 | 4 | 2 5/16 |
| **2 1/2** | 3/4 | .501 | .500 | 1/2 | 3 | 3/8 | 3/8 | 1 7/16 | 15/16 | 5/32 | 3/8 | 3/4 | 3/4 | 5/8 | 1/2 | 11/16 | 4 1/8 | 2 3/8 |
| **3 1/4** | 1 1/4 | .751 | .750 | 5/8 | 3 3/4 | 1/2 | 5/8 | 1 11/16 | 1 3/16 | 3/16 | 5/8 | 1 1/4 | 1 | 15/16 | 3/4 | 7/8 | 4 7/8 | 2 5/8 |
| **4** | 1 1/4 | .751 | .750 | 5/8 | 4 1/2 | 1/2 | 5/8 | 1 11/16 | 1 3/16 | 3/16 | 5/8 | 1 1/4 | 1 | 15/16 | 3/4 | 7/8 | 4 7/8 | 2 5/8 |

▲ Mounting style BB is not available in 1 1/4" bore.

## Table 2—Rod Dimensions

| Bore Size | Rod No. | Rod No. MM | Thread Style 8 CC | Thread Style 4 & 9 KK | A | B +0.000 -0.002 | C | D | LAF | NA | VF | W | WF | Y | Add Stroke XC | Add Stroke XD | Add Stroke ZC | Add Stroke ZD1 | Add Stroke ZD2 |
|---|---|---|---|---|---|---|---|---|---|---|---|---|---|---|---|---|---|---|---|
| **1 1/4** | 1 | 1/2 | 7/16-20 | 5/16-24 | 5/8 | .999 | 3/8 | 3/8 | 1 5/8 | 7/16 | 5/8 | 39/64 | 1 | 1 3/4 | ▲ | 5 3/16 | ▲ | 5 37/64 | 5 37/64 |
| **1 1/2** | 1 | 5/8 | 1/2-20 | 7/16-20 | 3/4 | 1.124 | 3/8 | 1/2 | 1 3/4 | 9/16 | 5/8 | 5/8 | 1 | 1 7/8 | 5 3/8 | 5 3/4 | 6 | 6 1/4 | 6 3/8 |
| | 2 | 1* | 7/8-14 | 3/4-16 | 1 1/8 | 1.499 | 5/8 | 7/8 | 2 1/2 | 15/16 | 3/4 | 1 | 1 3/8 | 2 1/4 | 5 3/4 | 6 1/8 | 6 3/8 | 6 5/8 | 6 3/4 |
| **2** | 1 | 5/8 | 1/2-20 | 7/16-20 | 3/4 | 1.124 | 3/8 | 1/2 | 1 3/4 | 9/16 | 5/8 | 5/8 | 1 | 1 7/8 | 5 3/8 | 5 3/4 | 6 | 6 1/4 | 6 3/8 |
| | 3 | 1 | 7/8-14 | 3/4-16 | 1 1/8 | 1.499 | 5/8 | 7/8 | 2 1/2 | 15/16 | 3/4 | 1 | 1 3/8 | 2 1/4 | 5 3/4 | 6 1/8 | 6 3/8 | 6 5/8 | 6 3/4 |
| **2 1/2** | 1 | 5/8 | 1/2-20 | 7/16-20 | 3/4 | 1.124 | 3/8 | 1/2 | 1 3/4 | 9/16 | 5/8 | 5/8 | 1 | 1 15/16 | 5 1/2 | 5 7/8 | 6 1/8 | 6 3/8 | 6 9/16 |
| | 3 | 1 | 7/8-14 | 3/4-16 | 1 1/8 | 1.499 | 5/8 | 7/8 | 2 1/2 | 15/16 | 3/4 | 1 | 1 3/8 | 2 5/16 | 5 7/8 | 6 1/4 | 6 1/2 | 6 3/4 | 6 5/16 |
| **3 1/4** | 1 | 1 | 7/8-14 | 3/4-16 | 1 1/8 | 1.499 | 5/8 | 7/8 | 2 1/2 | 15/16 | 3/4 | 3/4 | 1 3/8 | 2 7/16 | 6 7/8 | 7 1/2 | 7 13/16 | 8 1/4 | 8 3/8 |
| | 3 | 1 3/8 | 1 1/4-12 | 1-14 | 1 5/8 | 1.999 | 7/8 | 1 1/8 | 3 1/4 | 1 5/16 | 3/4 | 1 | 1 5/8 | 2 11/16 | 7 1/8 | 7 3/4 | 8 1/16 | 8 1/2 | 8 5/8 |
| **4** | 1 | 1 | 7/8-14 | 3/4-16 | 1 1/8 | 1.499 | 5/8 | 7/8 | 2 1/2 | 15/16 | 3/4 | 3/4 | 1 3/8 | 2 7/16 | 6 7/8 | 7 1/2 | 7 13/16 | 8 1/4 | 8 3/8 |
| | 3 | 1 3/8 | 1 1/4-12 | 1-14 | 1 5/8 | 1.999 | 7/8 | 1 1/8 | 3 1/4 | 1 5/16 | 3/4 | 1 | 1 5/8 | 2 11/16 | 7 1/8 | 7 3/4 | 8 1/16 | 8 1/2 | 8 5/8 |

* Cushion not available head end.

▲ Mounting style BB is not available in 1 1/4" bore.

**Table 3– Envelope and Mounting Dimensions**



**Parker Hannifin Corporation**
Actuator Division
Wadsworth, Ohio USA

## Head Trunnion Mount*

Style D
(NFPA MT1)

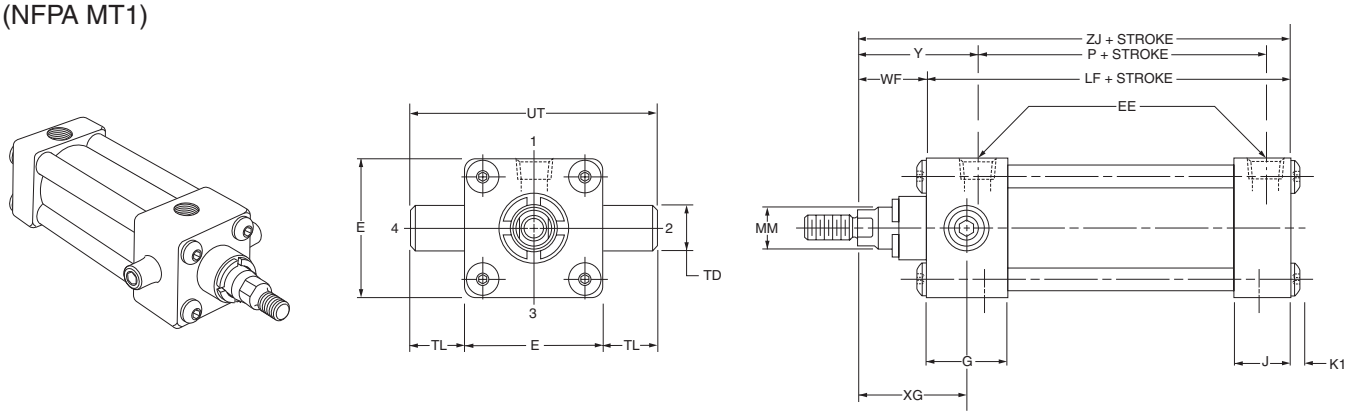


*Not available in 1½" bore with 1" rod or 1¼" bore.

## Cap Trunnion Mount*

Style DB
(NFPA MT2)

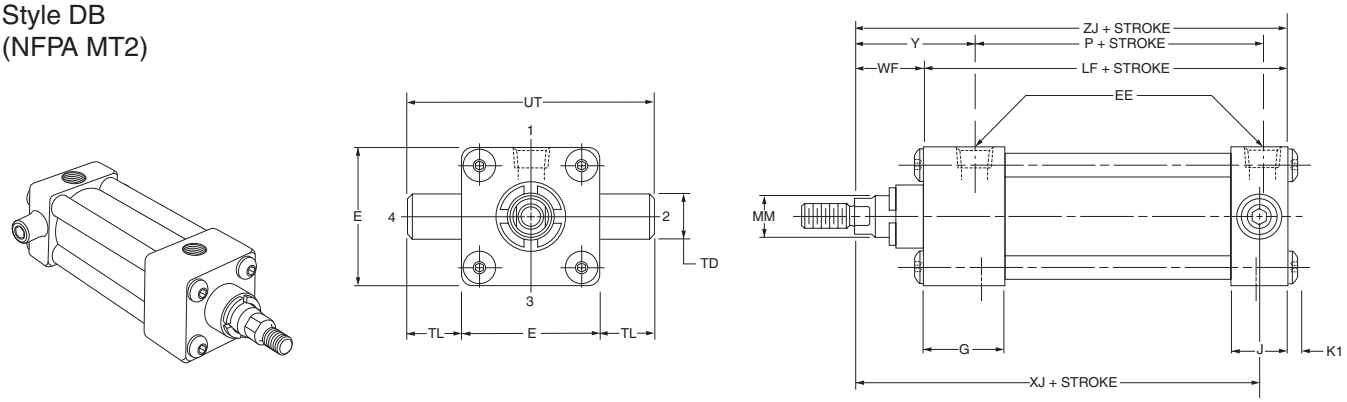


*Not available in 1¼" bore.

## Intermediate Trunnion Mount

Style DD
(NFPA MT4)

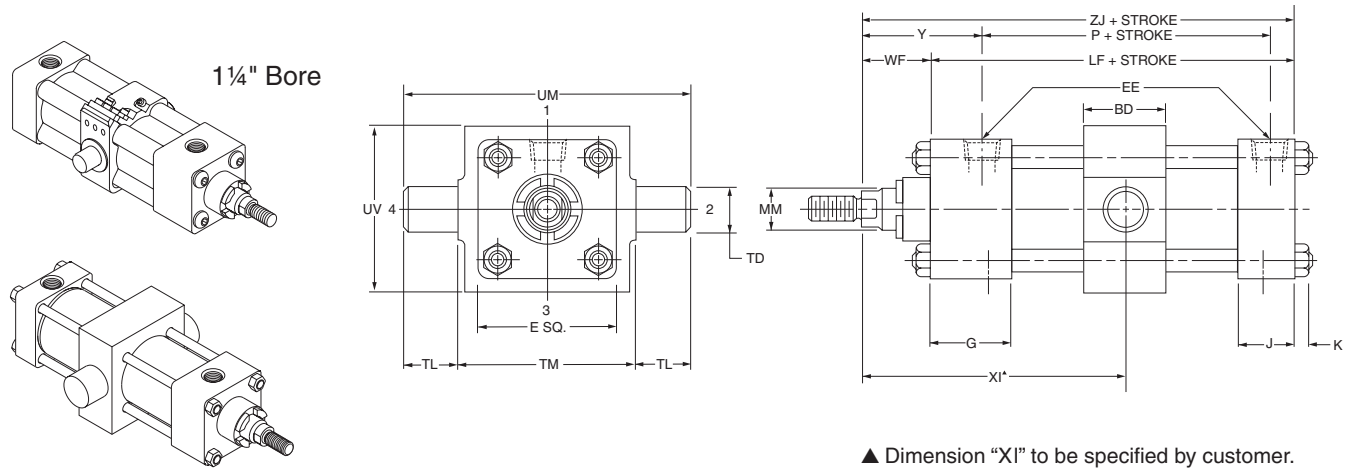


▲ Dimension "XI" to be specified by customer.



**Parker Hannifin Corporation**
Actuator Division
Wadsworth, Ohio USA

## Rod End Dimensions—Basic Cylinder

Thread Style 4
(NFPA Style SM)
Small Male

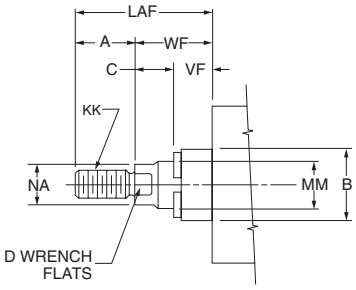


Thread Style 8
(NFPA Style IM)
Intermediate Male

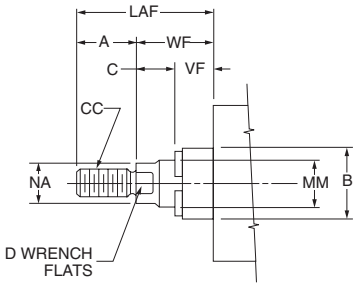


Thread Style 9
(NFPA Style SF)
Short Female

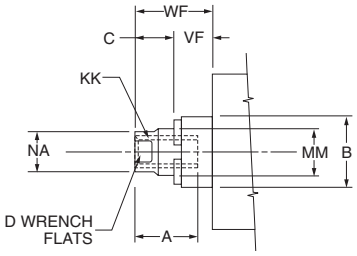


**"Special Thread" Style 3**

Special thread, extension, rod eye, blank, etc., are also available.

To order specify "Style 3" and give desired dimensions for CC or KK, A and W or WF.

If otherwise special, furnish dimensioned sketch.

## Table 1—Envelope and Mounting Dimensions

| Bore | BD | E | EE NPTF | G | J | K | K1 | TD +0.000 -0.001 | TL | TM | UM | UT | UV | Add Stroke LF | Add Stroke P | Style MT4 Min. Stroke |
|---|---|---|---|---|---|---|---|---|---|---|---|---|---|---|---|---|
| **1 1/4** | .98 | 1.83 | 1/4 | 1 5/16 | 13/16 | — | 1/8 | .471 | 15/32 | 1 31/32 | 2 29/32 | ■ | 2 9/16 | 3 5/16 | 2 3/16 | 0 |
| **1 1/2** | 1 1/4 | 2 | 3/8 | 1 7/16 | 15/16 | 1/4 | 1/8 | 1.000 | 1 | 2 1/2 | 4 1/2 | 4 | 2 1/2 | 3 5/8 | 2 5/16 | 0 |
| **2** | 1 1/2 | 2 1/2 | 3/8 | 1 7/16 | 15/16 | 5/16 | 5/32 | 1.000 | 1 | 3 | 5 | 4 1/2 | 3 | 3 5/8 | 2 5/16 | 1/4 |
| **2 1/2** | 1 1/2 | 3 | 3/8 | 1 7/16 | 15/16 | 5/16 | 5/32 | 1.000 | 1 | 3 1/2 | 5 1/2 | 5 | 3 1/2 | 3 3/4 | 2 3/8 | 1/8 |
| **3 1/4** | 2 | 3 3/4 | 1/2 | 1 11/16 | 1 3/16 | 3/8 | 3/16 | 1.000 | 1 | 4 1/2 | 6 1/2 | 5 3/4 | 4 1/4 | 4 1/4 | 2 5/8 | 5/8 |
| **4** | 2 | 4 1/2 | 1/2 | 1 11/16 | 1 3/16 | 3/8 | 3/16 | 1.000 | 1 | 5 1/4 | 7 1/4 | 6 1/2 | 5 | 4 1/4 | 2 5/8 | 5/8 |

■ Mounting styles D and DB are not available in 1 1/4" bore.

## Table 2—Rod Dimensions

## Table 3– Envelope and Mounting Dimensions

| Bore Size | Rod No. | Rod Dia. MM | Thread Style 8 CC | Thread Style 4 & 9 KK | A | B +0.000 -0.002 | C | D | LAF | NA | VF | W | WF | Y | XG | ▲ Min. XI | Add Stroke XJ | Add Stroke ZJ |
|---|---|---|---|---|---|---|---|---|---|---|---|---|---|---|---|---|---|---|
| **1 1/4** | 1 | 1/2 | 7/16-20 | 5/16-24 | 5/8 | .999 | 3/8 | 3/8 | 1 5/8 | 7/16 | 5/8 | 39/64 | 1 | 1 3/4 | ■ | 2 7/8 | ■ | 4 5/16 |
| **1 1/2** | 1 | 5/8 | 1/2-20 | 7/16-20 | 3/4 | 1.124 | 3/8 | 1/2 | 1 3/4 | 9/16 | 5/8 | 5/8 | 1 | 1 7/8 | 1 3/4 | 3 1/8 | 4 1/8 | 4 5/8 |
| | 2 | 1* | 7/8-14 | 3/4-16 | 1 1/8 | 1.499 | 5/8 | 7/8 | 2 1/2 | 15/16 | 3/4 | 1 | 1 3/8 | 2 1/4 | – | 3 1/2 | 4 1/2 | 5 |
| **2** | 1 | 5/8 | 1/2-20 | 7/16-20 | 3/4 | 1.124 | 3/8 | 1/2 | 1 3/4 | 9/16 | 5/8 | 5/8 | 1 | 1 7/8 | 1 3/4 | 3 1/4 | 4 1/8 | 4 5/8 |
| | 3 | 1 | 7/8-14 | 3/4-16 | 1 1/8 | 1.499 | 5/8 | 7/8 | 2 1/2 | 15/16 | 3/4 | 1 | 1 3/8 | 2 1/4 | 2 1/8 | 3 5/8 | 4 1/2 | 5 |
| **2 1/2** | 1 | 5/8 | 1/2-20 | 7/16-20 | 3/4 | 1.124 | 3/8 | 1/2 | 1 3/4 | 9/16 | 5/8 | 5/8 | 1 | 1 15/16 | 1 3/4 | 3 1/4 | 4 1/4 | 4 3/4 |
| | 3 | 1 | 7/8-14 | 3/4-16 | 1 1/8 | 1.499 | 5/8 | 7/8 | 2 1/2 | 15/16 | 3/4 | 1 | 1 3/8 | 2 5/16 | 2 1/8 | 3 5/8 | 4 5/8 | 5 1/8 |
| **3 1/4** | 1 | 1 | 7/8-14 | 3/4-16 | 1 1/8 | 1.499 | 5/8 | 7/8 | 2 1/2 | 15/16 | 3/4 | 3/4 | 1 3/8 | 2 7/16 | 2 1/4 | 4 1/8 | 5 | 5 5/8 |
| | 3 | 1 3/8 | 1 1/4-12 | 1-14 | 1 5/8 | 1.999 | 7/8 | 1 1/8 | 3 1/4 | 1 5/16 | 3/4 | 1 | 1 5/8 | 2 11/16 | 2 1/2 | 4 3/8 | 5 1/4 | 5 7/8 |
| **4** | 1 | 1 | 7/8-14 | 3/4-16 | 1 1/8 | 1.499 | 5/8 | 7/8 | 2 1/2 | 15/16 | 3/4 | 3/4 | 1 3/8 | 2 7/16 | 2 1/4 | 4 1/8 | 5 | 5 5/8 |
| | 3 | 1 3/8 | 1 1/4-12 | 1-14 | 1 5/8 | 1.999 | 7/8 | 1 1/8 | 3 1/4 | 1 5/16 | 3/4 | 1 | 1 5/8 | 2 11/16 | 2 1/2 | 4 3/8 | 5 1/4 | 5 7/8 |

* Cushion not available head end.

▲ Dimension "XI" to be specified by customer.

■ Mounting styles D and DB are not available in 1 1/4" bore.



**Parker Hannifin Corporation**
Actuator Division
Wadsworth, Ohio USA

**No Mount**
Style T
(NFPA MX0)

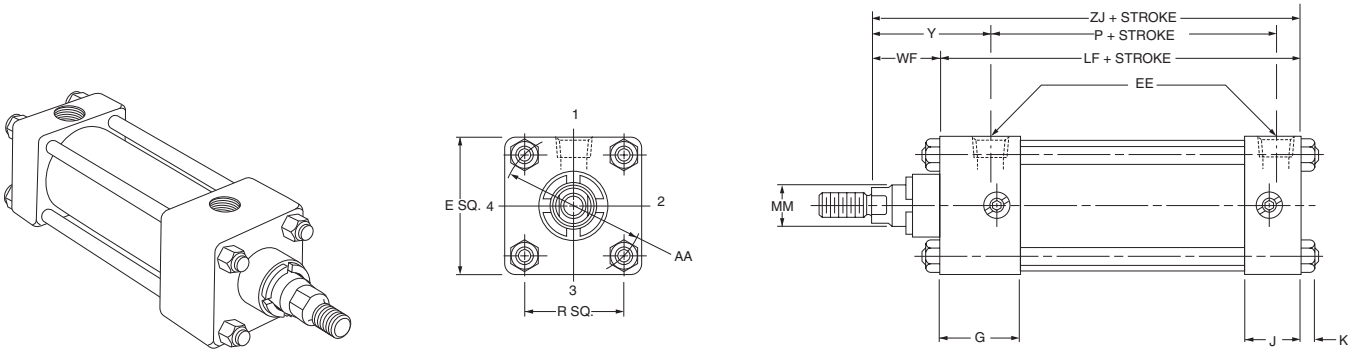


**Head Rectangular Flange Mount** (5" and 6" Bore Sizes)
Style J
(NFPA MF1)

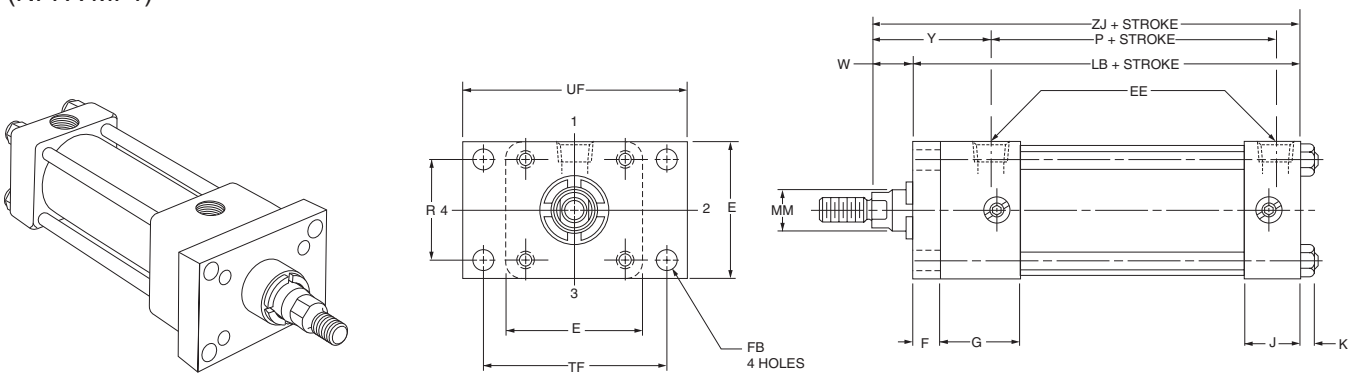


**Cap Rectangular Flange Mount** (5" and 6" Bore Sizes)
Style H
(NFPA MF2)

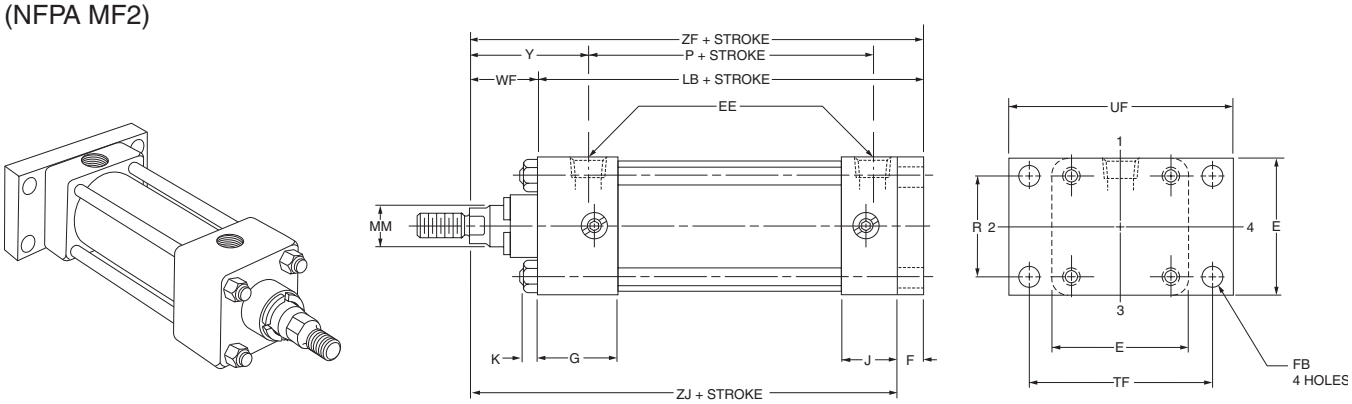




**Parker Hannifin Corporation**
Actuator Division
Wadsworth, Ohio USA

## Rod End Dimensions—Basic Cylinder

Thread Style 4
(NFPA Style SM)
Small Male

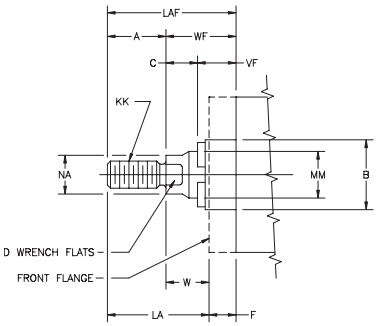


Thread Style 8
(NFPA Style IM)
Intermediate Male

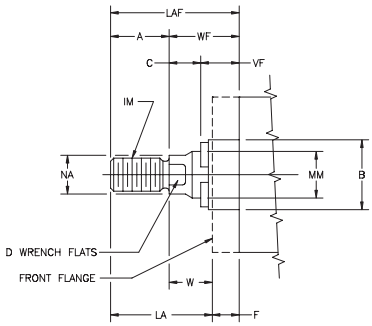


Thread Style 9
(NFPA Style SF)
Short Female

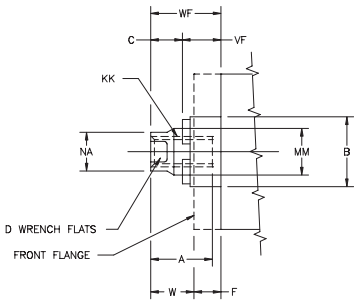


**"Special Thread" Style 3**

Special thread, extension, rod eye, blank, etc., are also available.

To order specify "Style 3" and give desired dimensions for CC or KK, A and W or WF.

If otherwise special, furnish dimensioned sketch.

## Table 1—Envelope and Mounting Dimensions

| Bore | AA | E | EE (NPTF) | F | FB | G | J | K | R | TF | UF | Add Stroke LB | Add Stroke LF | Add Stroke P |
|---|---|---|---|---|---|---|---|---|---|---|---|---|---|---|
| **5** | 5.8 | 5 1/2 | 1/2 | 5/8 | 9/16 | 1.66 | 1.22 | 7/16 | 4.10 | 6 5/8 | 7 5/8 | 5 1/8 | 4 1/2 | 2 7/8 |
| **6** | 6.9 | 6 1/2 | 3/4 | 3/4 | 9/16 | 1.91 | 1.41 | 7/16 | 4.88 | 7 5/8 | 8 5/8 | 5 3/4 | 5 | 3 1/8 |
| **8** | 9.1 | 8 1/2 | 3/4 | 3/4 | — | 1.81 | 1.44 | 9/16 | — | — | — | 5 7/8 | 5 1/8 | 3 1/4 |

## Table 2—Rod Dimensions

## Table 3– Envelope and Mounting Dimensions

| Bore Size | Rod No. | Rod Dia. MM | Thread Style 8 CC | Thread Style 4 & 9 KK | A | B +0.000 -0.002 | C | D | LA | NA | VF | W | WF | Y | Add Stroke ZF | Add Stroke ZJ |
|---|---|---|---|---|---|---|---|---|---|---|---|---|---|---|---|---|
| **5** | 1 | 1 | 7/8-14 | 3/4-16 | 1 1/8 | 1.499 | 5/8 | 7/8 | 1 7/8 | 15/16 | 3/4 | 3/4 | 1 3/8 | 2 7/16 | 6 1/2 | 5 7/8 |
| | 3 | 1 3/8 | 1 1/4-12 | 1-14 | 1 5/8 | 1.999 | 7/8 | 1 1/8 | 2 5/8 | 1 5/16 | 3/4 | 1 | 1 5/8 | 2 11/16 | 6 3/4 | 6 1/8 |
| **6** | 1 | 1 3/8 | 1 1/4-12 | 1-14 | 1 5/8 | 1.999 | 7/8 | 1 1/8 | 2 1/2 | 1 5/16 | 3/4 | 7/8 | 1 5/8 | 2 13/16 | 7 3/8 | 6 5/8 |
| | 3 | 1 3/4 | 1 1/2-12 | 1 1/4-12 | 2 | 2.374 | 13/16 | 1 1/2 | 3 1/8 | 1 11/16 | 1 1/16 | 1 1/8 | 1 7/8 | 3 1/16 | 7 5/8 | 6 7/8 |
| **8** | 1 | 1 3/8 | 1 1/4-12 | 1-14 | 1 5/8 | 1.999 | 7/8 | 1 1/8 | 2 1/2 | 1 5/16 | 3/4 | 7/8 | 1 5/8 | 2 3/4 | — | 6 3/4 |
| | 3 | 1 3/4 | 1 1/2-12 | 1 1/4-12 | 2 | 2.374 | 13/16 | 1 1/2 | 3 1/8 | 1 11/16 | 1 1/16 | 1 1/8 | 1 7/8 | 3 | — | 7 |



**Parker Hannifin Corporation**
Actuator Division
Wadsworth, Ohio USA

C086

## Head Square Mount
Style JB
(NFPA ME3)

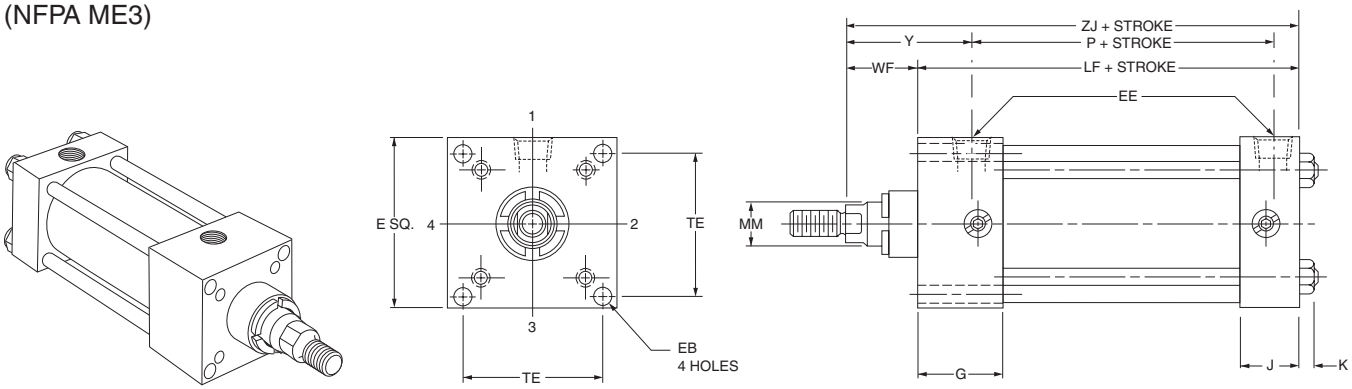


## Cap Square Mount
Style HB
(NFPA ME4)

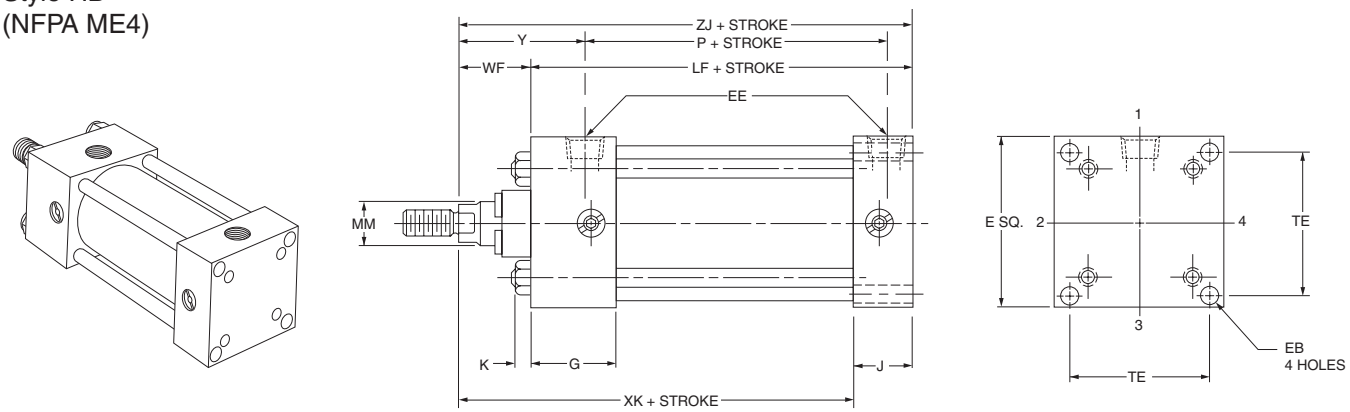




**Parker Hannifin Corporation**
Actuator Division
Wadsworth, Ohio USA

## Rod End Dimensions—Basic Cylinder

Thread Style 4
(NFPA Style SM)
Small Male

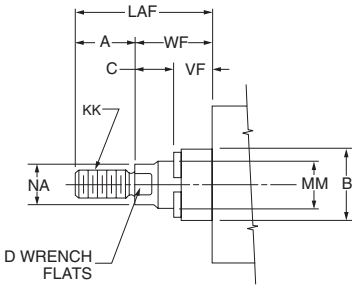


Thread Style 8
(NFPA Style IM)
Intermediate Male

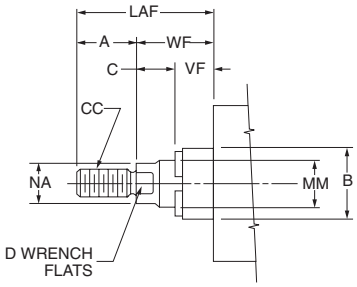


Thread Style 9
(NFPA Style SF)
Short Female

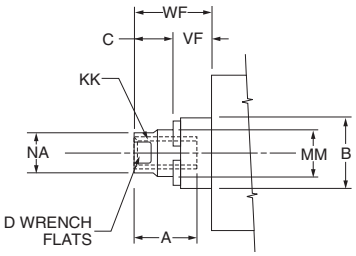


**"Special Thread" Style 3**

Special thread, extension, rod eye, blank, etc., are also available.

To order specify "Style 3" and give desired dimensions for CC or KK, A and W or WF.

If otherwise special, furnish dimensioned sketch.

## Table 1—Envelope and Mounting Dimensions

| Bore | E | EB | EE (NPTF) | G | J | K | TE | Add Sttroke LF | Add Sttroke P |
|---|---|---|---|---|---|---|---|---|---|
| **8** | $8\frac{1}{2}$ | $\frac{11}{16}$ | $\frac{3}{4}$ | 1.81 | 1.44 | $\frac{9}{16}$ | 7.57 | $5\frac{1}{8}$ | $3\frac{1}{4}$ |

## Table 2—Rod Dimensions

| Bore Size | Rod No. | Rod Dia. MM | Thread Style 8 CC | Thread Style 4 & 9 KK | A | B +0.000 -0.002 | C | D | LAF | NA | VF | W | WF | Y | Add Stroke XK | Add Stroke ZJ |
|---|---|---|---|---|---|---|---|---|---|---|---|---|---|---|---|---|
| **8** | 1 | $1\frac{3}{8}$ | $1\frac{1}{4}$-12 | 1-14 | $1\frac{5}{8}$ | 1.999 | $\frac{7}{8}$ | $1\frac{1}{8}$ | $3\frac{1}{4}$ | $1\frac{5}{16}$ | $\frac{3}{4}$ | $\frac{7}{8}$ | $1\frac{5}{8}$ | $2\frac{3}{4}$ | $5\frac{5}{16}$ | $6\frac{3}{4}$ |
| | 3 | $1\frac{3}{4}$ | $1\frac{1}{2}$-12 | $1\frac{1}{4}$-12 | 2 | 2.374 | $\frac{13}{16}$ | $1\frac{1}{2}$ | $3\frac{7}{8}$ | $1\frac{11}{16}$ | $1\frac{1}{16}$ | $1\frac{1}{8}$ | $1\frac{7}{8}$ | 3 | $5\frac{9}{16}$ | 7 |

**Table 3—Envelope and Mounting Dimensions**



**Parker Hannifin Corporation**
Actuator Division
Wadsworth, Ohio USA

C086

## Tie Rods Extended Head End Mount
Style TB
(NFPA MX3)

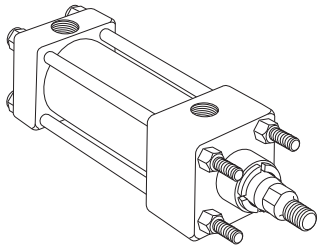

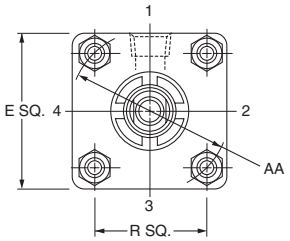


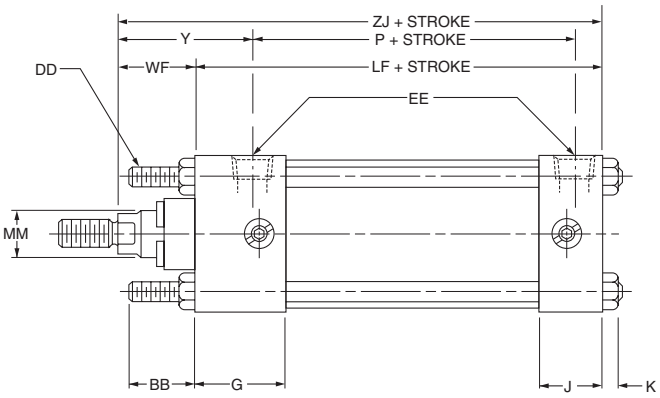


## Tie Rods Extended Cap End Mount
Style TC
(NFPA MX2)

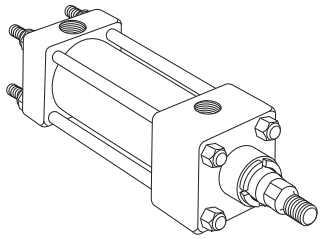

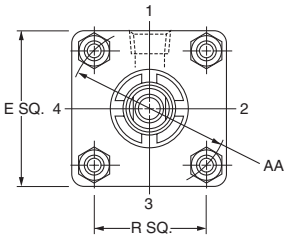


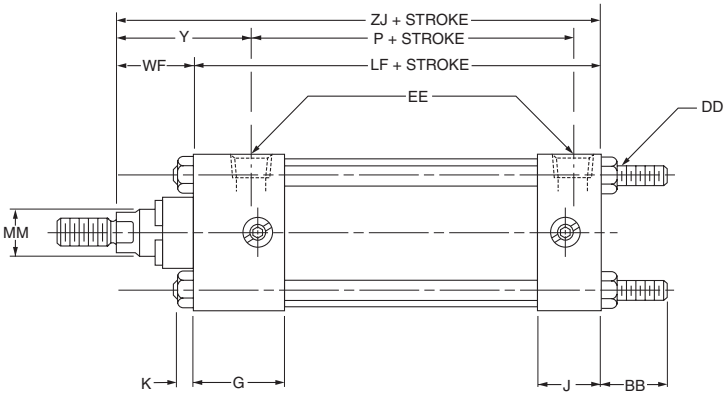


## Tie Rods Extended Both Ends Mount
Style TD
(NFPA MX1)

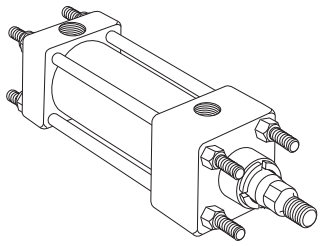

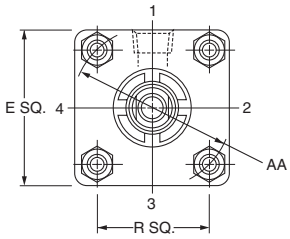


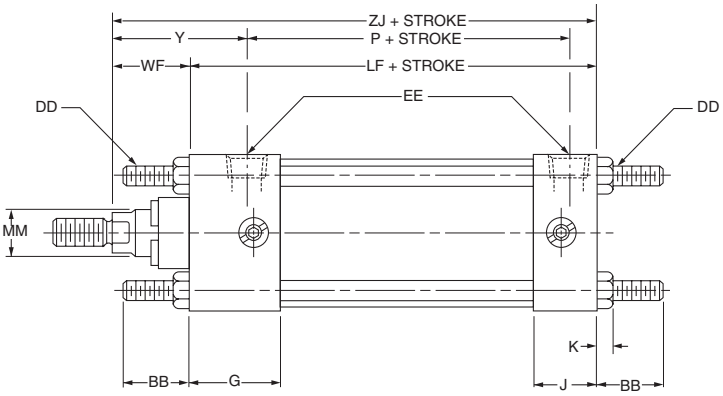


## Sleeve Nut Mount
Style TE
(NFPA MX5)

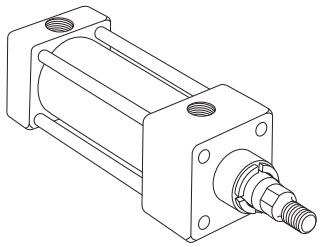

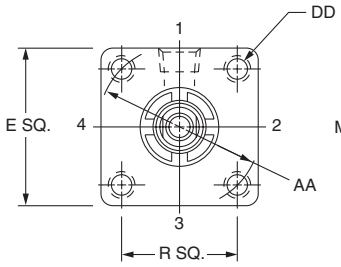


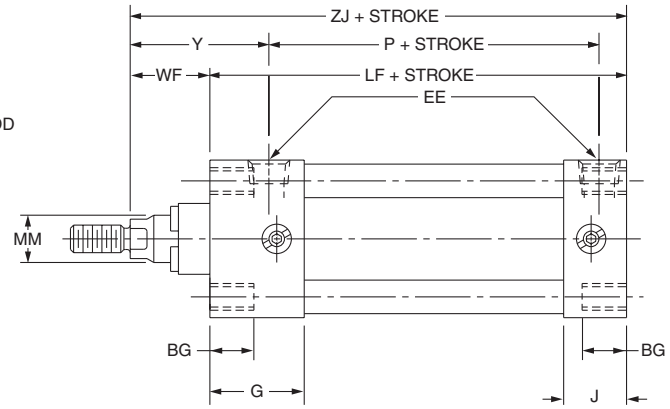




**Parker Hannifin Corporation**
Actuator Division
Wadsworth, Ohio USA

## Rod End Dimensions—Basic Cylinder

Thread Style 4
(NFPA Style SM)
Small Male

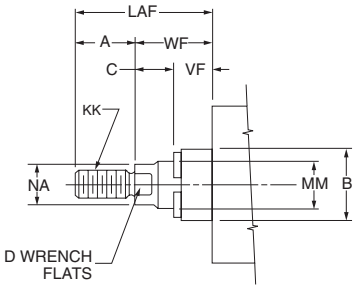


Thread Style 8
(NFPA Style IM)
Intermediate Male

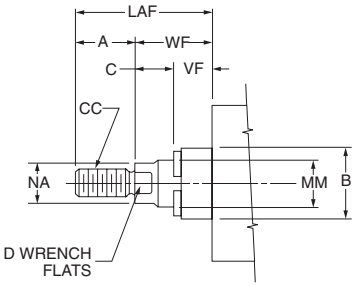


Thread Style 9
(NFPA Style SF)
Short Female

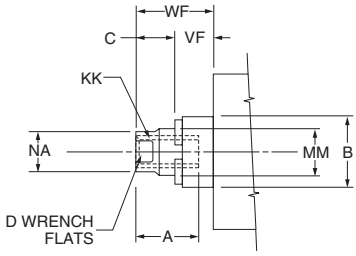


**"Special Thread" Style 3**

Special thread, extension, rod eye, blank, etc., are also available.

To order specify "Style 3" and give desired dimensions for CC or KK, A and W or WF.

If otherwise special, furnish dimensioned sketch.

## Table 1—Envelope and Mounting Dimensions

| Bore | AA | BB | BG | DD | E | EE (NPTF) | G | J | K | R | Add Stroke LF | Add Stroke P |
|---|---|---|---|---|---|---|---|---|---|---|---|---|
| **5** | 5.8 | $1\frac{13}{16}$ | 0.50 | $\frac{1}{2}$–20 | $5\frac{1}{2}$ | $\frac{1}{2}$ | 1.66 | 1.22 | $\frac{7}{16}$ | 4.10 | $4\frac{1}{2}$ | $2\frac{7}{8}$ |
| **6** | 6.9 | $1\frac{13}{16}$ | 0.50 | $\frac{1}{2}$–20 | $6\frac{1}{2}$ | $\frac{3}{4}$ | 1.91 | 1.41 | $\frac{7}{16}$ | 4.88 | 5 | $3\frac{1}{8}$ |
| **8** | 9.1 | $2\frac{5}{16}$ | 0.62 | $\frac{5}{8}$–18 | $8\frac{1}{2}$ | $\frac{3}{4}$ | 1.81 | 1.44 | $\frac{9}{16}$ | 6.44 | $5\frac{1}{8}$ | $3\frac{1}{4}$ |

## Table 2—Rod Dimensions

## Table 3– Envelope and Mounting Dimensions

| Bore Size | Rod No. | Rod Dia. MM | Thread Style 8 CC | Thread Style 4 & 9 KK | A | B +0.000 -0.002 | C | D | LAF | NA | VF | W | WF | Y | Add Stroke ZJ |
|---|---|---|---|---|---|---|---|---|---|---|---|---|---|---|---|
| **5** | 1 | 1 | $\frac{7}{8}$-14 | $\frac{3}{4}$-16 | $1\frac{1}{8}$ | 1.499 | $\frac{5}{8}$ | $\frac{7}{8}$ | $2\frac{1}{2}$ | $\frac{15}{16}$ | $\frac{3}{4}$ | $\frac{3}{4}$ | $1\frac{3}{8}$ | $2\frac{7}{16}$ | $5\frac{7}{8}$ |
| | 3 | $1\frac{3}{8}$ | $1\frac{1}{4}$-12 | 1-14 | $1\frac{5}{8}$ | 1.999 | $\frac{7}{8}$ | $1\frac{1}{8}$ | $3\frac{1}{4}$ | $1\frac{5}{16}$ | $\frac{3}{4}$ | 1 | $1\frac{5}{8}$ | $2\frac{11}{16}$ | $6\frac{1}{8}$ |
| **6** | 1 | $1\frac{3}{8}$ | $1\frac{1}{4}$-12 | 1-14 | $1\frac{5}{8}$ | 1.999 | $\frac{7}{8}$ | $1\frac{1}{8}$ | $3\frac{1}{4}$ | $1\frac{5}{16}$ | $\frac{3}{4}$ | $\frac{7}{8}$ | $1\frac{5}{8}$ | $2\frac{13}{16}$ | $6\frac{5}{8}$ |
| | 3 | $1\frac{3}{4}$ | $1\frac{1}{2}$-12 | $1\frac{1}{4}$-12 | 2 | 2.374 | $\frac{13}{16}$ | $1\frac{1}{2}$ | $3\frac{7}{8}$ | $1\frac{11}{16}$ | $1\frac{1}{16}$ | $1\frac{1}{8}$ | $1\frac{7}{8}$ | $3\frac{1}{16}$ | $6\frac{7}{8}$ |
| **8** | 1 | $1\frac{3}{8}$ | $1\frac{1}{4}$-12 | 1-14 | $1\frac{5}{8}$ | 1.999 | $\frac{7}{8}$ | $1\frac{1}{8}$ | $3\frac{1}{4}$ | $1\frac{5}{16}$ | $\frac{3}{4}$ | $\frac{7}{8}$ | $1\frac{5}{8}$ | $2\frac{3}{4}$ | $6\frac{3}{4}$ |
| | 3 | $1\frac{3}{4}$ | $1\frac{1}{2}$-12 | $1\frac{1}{4}$-12 | 2 | 2.374 | $\frac{13}{16}$ | $1\frac{1}{2}$ | $3\frac{7}{8}$ | $1\frac{11}{16}$ | $1\frac{1}{16}$ | $1\frac{1}{8}$ | $1\frac{7}{8}$ | 3 | 7 |



**Parker Hannifin Corporation**
Actuator Division
Wadsworth, Ohio USA

C086

**Side End Angle Mount**
Style CB*
(NFPA MS1)

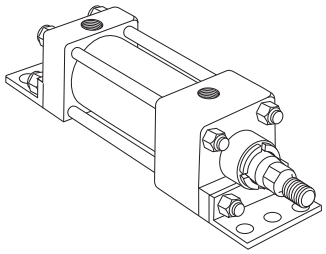

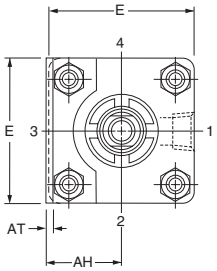


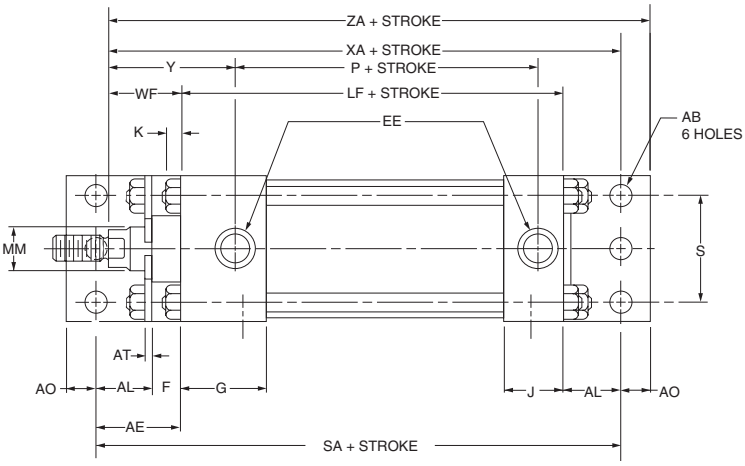


*Maximum recommended pressure of 150 PSI.



**Parker Hannifin Corporation**
Actuator Division
Wadsworth, Ohio USA

## Rod End Dimensions—Basic Cylinder

Thread Style 4
(NFPA Style SM)
Small Male

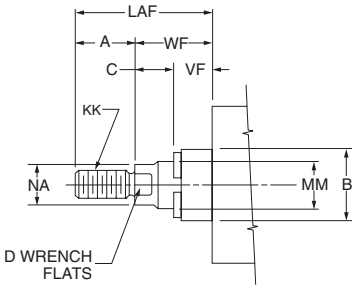


Thread Style 8
(NFPA Style IM)
Intermediate Male

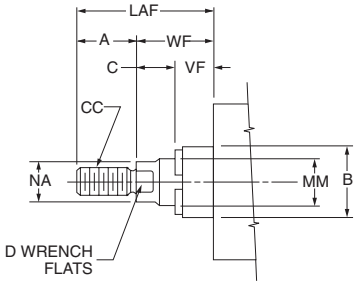


Thread Style 9
(NFPA Style SF)
Short Female

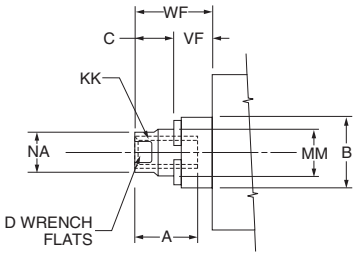


**"Special Thread" Style 3**

Special thread, extension, rod eye, blank, etc., are also available.

To order specify "Style 3" and give desired dimensions for CC or KK, A and W or WF.

If otherwise special, furnish dimensioned sketch.

## Table 1—Envelope and Mounting Dimensions

| Bore | AB | AE | AH | AL | AO | AT | E | EE (NPTF) | F | G | J | K | R | S | Add Stroke LF | Add Stroke P | Add Stroke SA |
|---|---|---|---|---|---|---|---|---|---|---|---|---|---|---|---|---|---|
| **5** | 11/16 | 2 | 2 3/4 | 1 3/8 | 5/8 | 3/16 | 5 1/2 | 1/2 | 5/8 | 1.66 | 1.22 | 7/16 | 4.10 | 4 1/4 | 4 1/2 | 2 7/8 | 7 7/8 |
| **6** | 13/16 | 2 1/8 | 3 1/4 | 1 3/8 | 5/8 | 3/16 | 6 1/2 | 3/4 | 3/4 | 1.91 | 1.41 | 7/16 | 4.88 | 5 1/4 | 5 | 3 1/8 | 8 1/2 |
| **8** | 13/16 | 1 13/16 | 4 1/4 | 1 13/16 | 11/16 | 1/4 | 8 1/2 | 3/4 | — | 1.81 | 1.44 | 9/16 | 6.44 | 7 1/8 | 5 1/8 | 3 1/4 | 8 3/4 |

## Table 2—Rod Dimensions

## Table 3—Envelope and Mounting Dimensions

| Bore Size | Rod No. | Rod Dia. MM | Style 8 CC | Style 4 & 9 KK | A | B +0.000 -0.002 | C | D | LAF | NA | VF | W | WF | Y | Add Stroke XA | Add Stroke ZA |
|---|---|---|---|---|---|---|---|---|---|---|---|---|---|---|---|---|
| **5** | 1 | 1 | 7/8-14 | 3/4-16 | 1 1/8 | 1.499 | 5/8 | 7/8 | 2 1/2 | 15/16 | 3/4 | 3/4 | 1 3/8 | 2 7/16 | 7 1/4 | 7 7/8 |
| | 3 | 1 3/8 | 1 1/4-12 | 1-14 | 1 5/8 | 1.999 | 7/8 | 1 1/8 | 3 1/4 | 1 5/16 | 3/4 | 1 | 1 5/8 | 2 11/16 | 7 1/2 | 8 1/8 |
| **6** | 1 | 1 3/8 | 1 1/4-12 | 1-14 | 1 5/8 | 1.999 | 7/8 | 1 1/8 | 3 1/4 | 1 5/16 | 3/4 | 7/8 1 | 5/8 | 2 13/16 | 8 | 8 5/8 |
| | 3 | 1 3/4 | 1 1/2-12 | 1 1/4-12 | 2 | 2.374 | 13/16 | 1 1/2 | 3 7/8 | 1 11/16 | 1 1/16 | 1 1/8 | 1 7/8 | 3 1/16 | 8 1/4 | 8 7/8 |
| **8** | 1 | 1 3/8 | 1 1/4-12 | 1-14 | 1 5/8 | 1.999 | 7/8 | 1 1/8 | 3 1/4 | 1 5/16 | 3/4 | 7/8 | 1 5/8 | 2 3/4 | 8 9/16 | 9 1/4 |
| | 3 | 1 3/4 | 1 1/2-12 | 1 1/4-12 | 2 | 2.374 | 13/16 | 1 1/2 | 3 7/8 | 1 11/16 | 1 1/16 | 1 1/8 | 1 7/8 | 3 | 8 13/16 | 9 1/2 |



**Parker Hannifin Corporation**
Actuator Division
Wadsworth, Ohio USA

C086

## Side Lug Mount
Style C
(NFPA MS2)

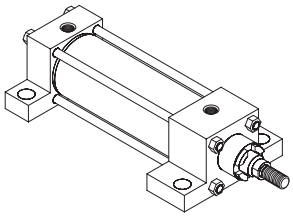

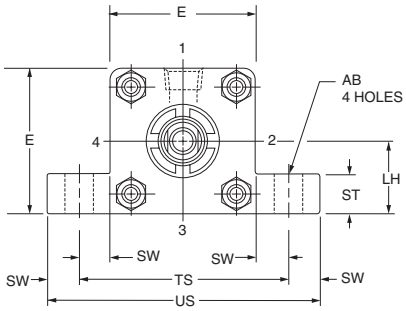


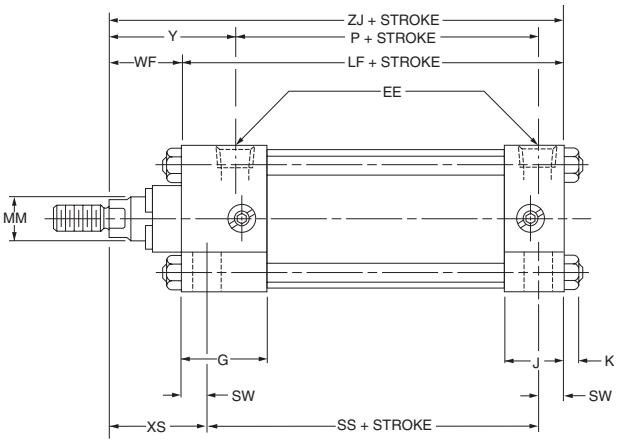


## Side Tap Mount
Style F
(NFPA MS4)

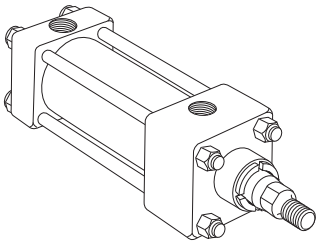

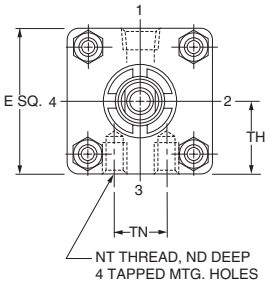


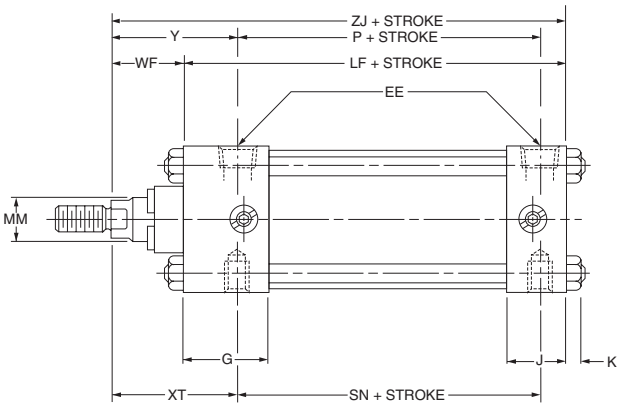




**Parker Hannifin Corporation**
Actuator Division
Wadsworth, Ohio USA

## Rod End Dimensions—Basic Cylinder

Thread Style 4
(NFPA Style SM)
Small Male

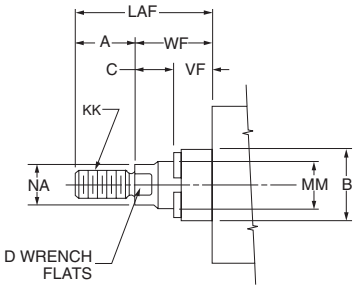


Thread Style 8
(NFPA Style IM)
Intermediate Male

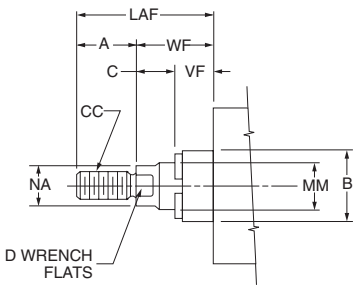


Thread Style 9
(NFPA Style SF)
Short Female

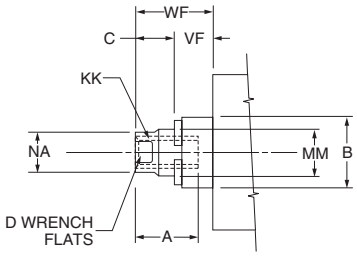


**"Special Thread" Style 3**

Special thread, extension, rod eye, blank, etc., are also available.

To order specify "Style 3" and give desired dimensions for CC or KK, A and WF.

If otherwise special, furnish dimensioned sketch.

## Table 1—Envelope and Mounting Dimensions

| Bore | AB | E | EE (NPTF) | G | J | K | LH ±0.003 | NT | ST | SW | TH ±0.003 | TN | TS | US | Add Stroke LF | Add Stroke P | Add Stroke SN | Add Stroke SS |
|---|---|---|---|---|---|---|---|---|---|---|---|---|---|---|---|---|---|---|
| **5** | 13/16 | 5 1/2 | 1/2 | 1.66 | 1.22 | 7/16 | 2.743 | 5/8-11 | 1 | 11/16 | 2.743 | 2 11/16 | 6 7/8 | 8 1/4 | 4 1/2 | 2 7/8 | 2 7/8 | 3 1/8 |
| **6** | 13/16 | 6 1/2 | 3/4 | 1.91 | 1.41 | 7/16 | 3.243 | 3/4-10 | 1 | 11/16 | 3.243 | 3 1/4 | 7 7/8 | 9 1/4 | 5 | 3 1/8 | 3 1/8 | 3 5/8 |
| **8** | 13/16 | 8 1/2 | 3/4 | 1.81 | 1.44 | 9/16 | 4.243 | 3/4-10 | 1 | 11/16 | 4.243 | 4 1/2 | 9 7/8 | 11 1/4 | 5 1/8 | 3 1/4 | 3 1/4 | 3 3/4 |

## Table 2—Rod Dimensions

## Table 3—Envelope and Mounting Dimensions

| Bore Size | Rod No. | Rod Dia. MM | Thread Style 8 CC | Thread Style 4 & 9 KK | A | B +0.000 -0.002 | C | D | LAF | NA | VF | WF | Y | ND | XS | XT | Add Stroke ZJ |
|---|---|---|---|---|---|---|---|---|---|---|---|---|---|---|---|---|---|
| **5** | 1 | 1 | 7/8-14 | 3/4-16 | 1 1/8 | 1.499 | 5/8 | 7/8 | 2 1/2 | 15/16 | 3/4 | 1 3/8 | 2 7/16 | 15/16 | 2 1/16 | 2 7/16 | 5 7/8 |
| | 3 | 1 3/8 | 1 1/4-12 | 1-14 | 1 5/8 | 1.999 | 7/8 | 1 1/8 | 3 1/4 | 1 5/16 | 3/4 | 1 5/8 | 2 11/16 | 15/16 | 2 5/16 | 2 11/16 | 6 1/8 |
| **6** | 1 | 1 3/8 | 1 1/4-12 | 1-14 | 1 5/8 | 1.999 | 7/8 | 1 1/8 | 3 1/4 | 1 5/16 | 3/4 | 1 5/8 | 2 13/16 | 1 1/8 | 2 5/16 | 2 13/16 | 6 5/8 |
| | 3 | 1 3/4 | 1 1/2-12 | 1 1/4-12 | 2 | 2.374 | 13/16 | 1 1/2 | 3 7/8 | 1 11/16 | 1 1/16 | 1 7/8 | 3 1/16 | 1 1/8 | 2 9/16 | 3 1/16 | 6 7/8 |
| **8** | 1 | 1 3/8 | 1 1/4-12 | 1-14 | 1 5/8 | 1.999 | 7/8 | 1 1/8 | 3 1/4 | 1 5/16 | 3/4 | 1 5/8 | 2 3/4 | 1 1/8 | 2 5/16 | 2 13/16 | 6 3/4 |
| | 3 | 1 3/4 | 1 1/2-12 | 1 1/4-12 | 2 | 2.374 | 13/16 | 1 1/2 | 3 7/8 | 1 11/16 | 1 1/16 | 1 7/8 | 3 | 1 1/8 | 2 9/16 | 3 1/16 | 7 |



**Parker Hannifin Corporation**
Actuator Division
Wadsworth, Ohio USA

C086

## Cap Fixed Clevis
Style BB
(NFPA MP1)

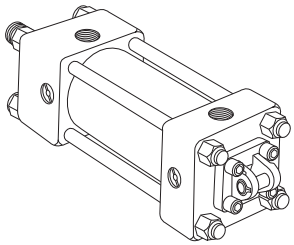

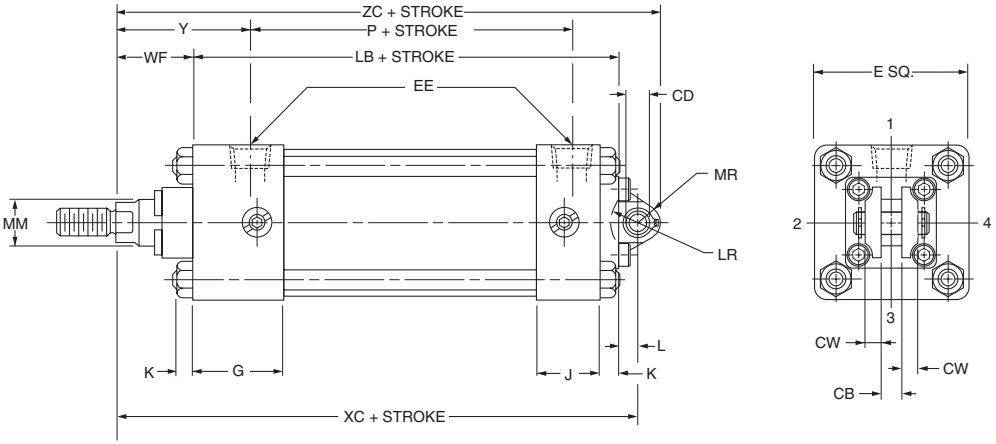


For maximum swivel angle with rear mounting plate for “BB” mounting, see 2MA Series cylinder accessories.

## Cap Detachable Clevis
Style BC
(NFPA MP2)

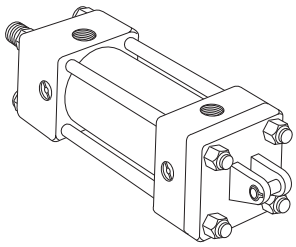

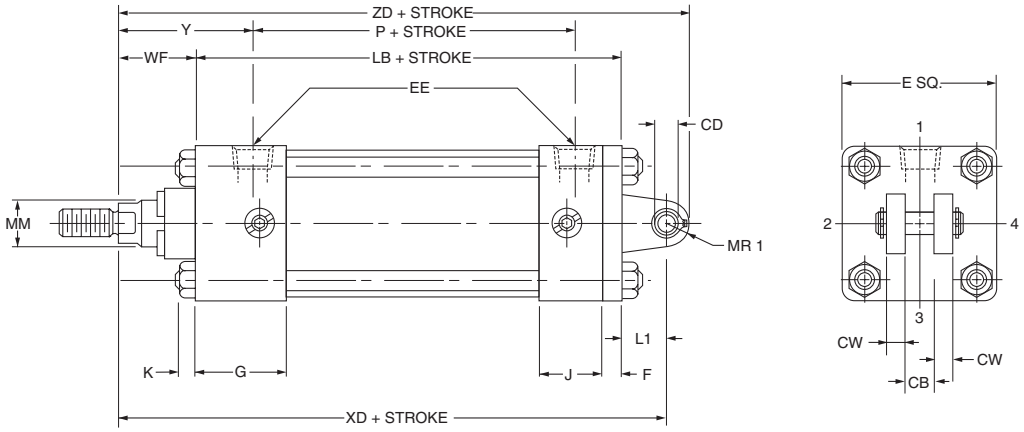


## Cap Detachable Eye Mount
Style BE
(NFPA MP4) 5” & 6” Bore Only

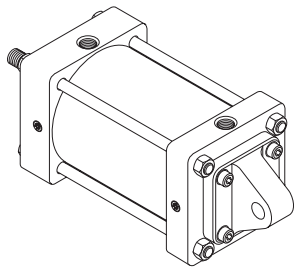

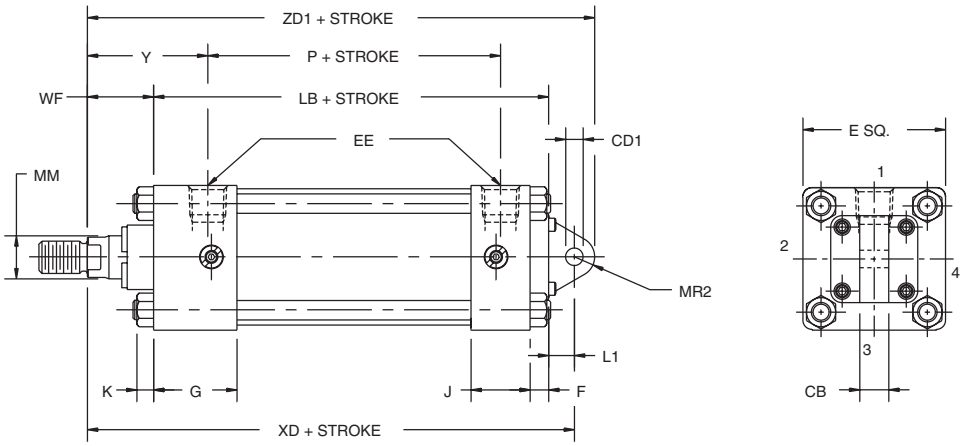




**Parker Hannifin Corporation**
Actuator Division
Wadsworth, Ohio USA

## Rod End Dimensions—Basic Cylinder

Thread Style 4
(NFPA Style SM)
Small Male

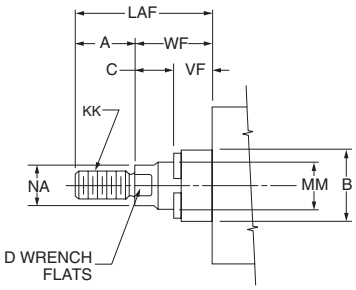


Thread Style 8
(NFPA Style IM)
Intermediate Male

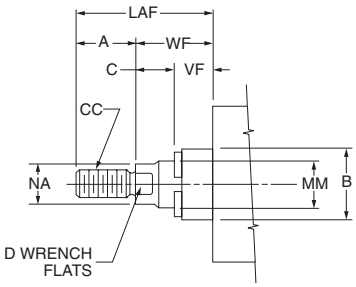


Thread Style 9
(NFPA Style SF)
Short Female

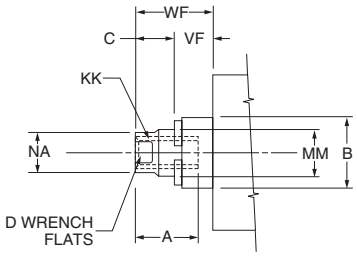


**"Special Thread" Style 3**

Special thread, extension, rod eye, blank, etc., are also available.

To order specify "Style 3" and give desired dimensions for CC or KK, A and WF.

If otherwise special, furnish dimensioned sketch.

## Table 1—Envelope and Mounting Dimensions

| Bore | CB | CD▲ +0.000 -0.002 | CD1▲ +0.002 +0.004 | CW | E | EE (NPTF) | F | G | J | K | L | L1 | LR | MR | MR1 | MR2 | Add Stroke LB | Add Stroke P |
|---|---|---|---|---|---|---|---|---|---|---|---|---|---|---|---|---|---|---|
| **5** | 1 1/4 | .751 | .750 | 5/8 | 5 1/2 | 1/2 | 5/8 | 1.66 | 1.22 | 7/16 | 5/8 | 1 1/4 | 1 | 15/16 | 3/4 | 7/8 | 5 1/8 | 2 7/8 |
| **6** | 1 1/2 | 1.001 | 1.00 | 3/4 | 6 1/2 | 3/4 | 3/4 | 1.91 | 1.41 | 7/16 | 3/4 | 1 1/2 | 1 1/4 | 1 1/8 | 1 | 1 1/8 | 5 3/4 | 3 1/8 |
| **8** | 1 1/2 | 1.001 | — | 3/4 | 8 1/2 | 3/4 | 3/4 | 1.81 | 1.44 | 9/16 | 3/4 | 1 1/2 | 1 1/4 | 1 1/8 | 1 | — | 5 7/8 | 3 1/4 |

▲Dimension CD is pin diameter.

## Table 2—Rod Dimensions

## Table 3—Envelope and Mounting Dimensions

| Bore Size | Rod No. | Rod Dia. MM | Thread Style 8 CC | Thread Style 4 & 9 KK | A | B +0.000 -0.002 | C | D | LAF | NA | VF | WF | Y | Add Stroke XC | Add Stroke XD | Add Stroke ZC | Add Stroke ZD | Add Stroke ZD1 |
|---|---|---|---|---|---|---|---|---|---|---|---|---|---|---|---|---|---|---|
| **5** | 1 | 1 | 7/8-14 | 3/4-16 | 1 1/8 | 1.499 | 5/8 | 7/8 | 2 1/2 | 15/16 | 3/4 | 1 3/8 | 2 7/16 | 7 1/8 | 7 3/4 | 8 1/16 | 8 1/2 | 8 5/8 |
| | 3 | 1 3/8 | 1 1/4-12 | 1-14 | 1 5/8 | 1.999 | 7/8 | 1 1/8 | 3 1/4 | 1 5/16 | 3/4 | 1 5/8 | 2 11/16 | 7 3/8 | 8 | 8 5/16 | 8 3/4 | — |
| **6** | 1 | 1 3/8 | 1 1/4-12 | 1-14 | 1 5/8 | 1.999 | 7/8 | 1 1/8 | 3 1/4 | 1 5/16 | 3/4 | 1 5/8 | 2 13/16 | 8 1/8 | 8 7/8 | 9 1/4 | 9 7/8 | 10 |
| | 3 | 1 3/4 | 1 1/2-12 | 1 1/4-12 | 2 | 2.374 | 13/16 | 1 1/2 | 3 7/8 | 1 11/16 | 1 1/16 | 1 7/8 | 3 1/16 | 8 3/8 | 9 1/8 | 9 1/2 | 10 1/8 | — |
| **8** | 1 | 1 3/8 | 1 1/4-12 | 1-14 | 1 5/8 | 1.999 | 7/8 | 1 1/8 | 3 1/4 | 1 5/16 | 3/4 | 1 5/8 | 2 3/4 | 8 1/4 | 9 | 9 3/8 | 10 | — |
| | 3 | 1 3/4 | 1 1/2-12 | 1 1/4-12 | 2 | 2.374 | 13/16 | 1 1/2 | 3 7/8 | 1 11/16 | 1 1/16 | 1 7/8 | 3 | 8 1/2 | 9 1/4 | 9 5/8 | 10 1/4 | — |



**Parker Hannifin Corporation**
Actuator Division
Wadsworth, Ohio USA

## Head Trunnion Mount
Style D
(NFPA MT1)

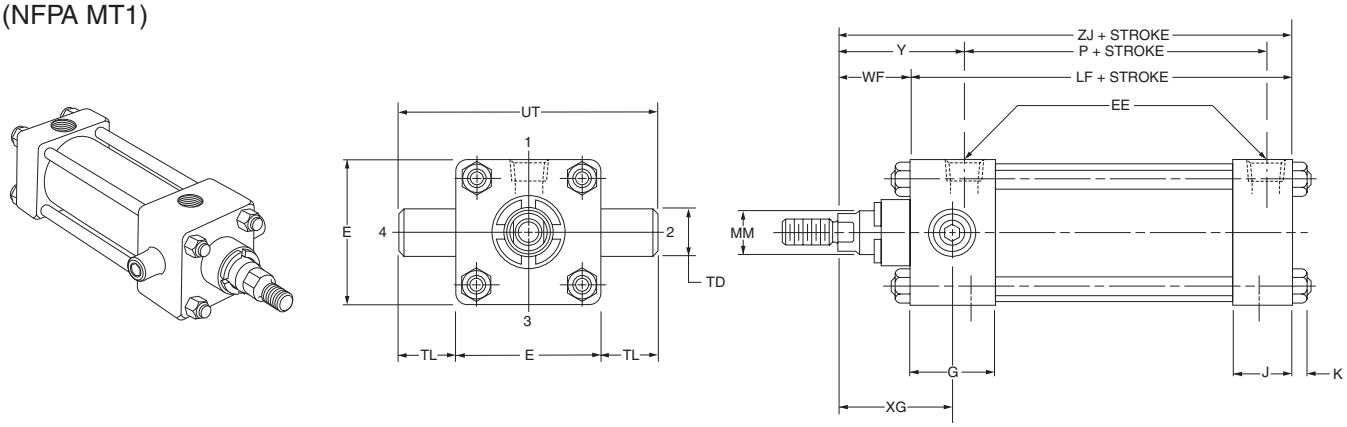


## Cap Trunnion Mount
Style DB
(NFPA MT2)

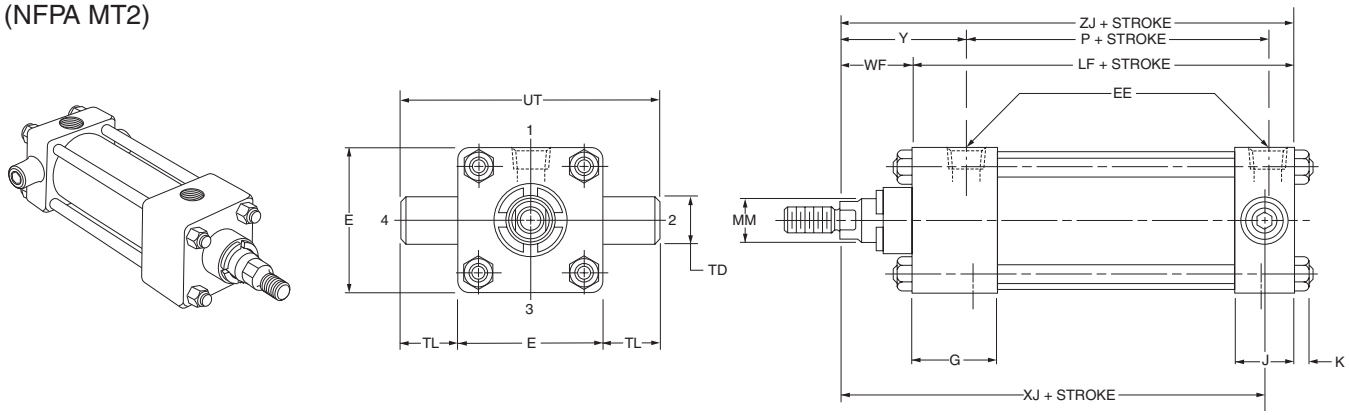


## Intermediate Trunnion Mount
Style DD
(NFPA MT4)

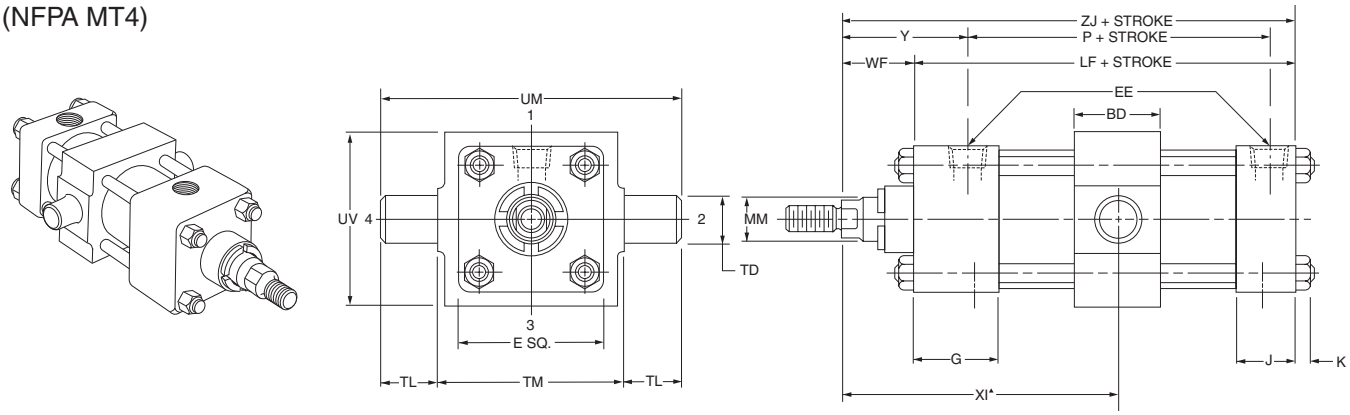


▲Dimension "XI" to be specified by customer.



**Parker Hannifin Corporation**
Actuator Division
Wadsworth, Ohio USA

## Rod End Dimensions—Basic Cylinder

Thread Style 4
(NFPA Style SM)
Small Male

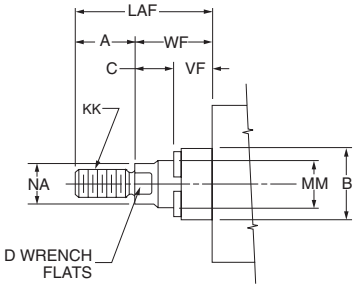


Thread Style 8
(NFPA Style IM)
Intermediate Male

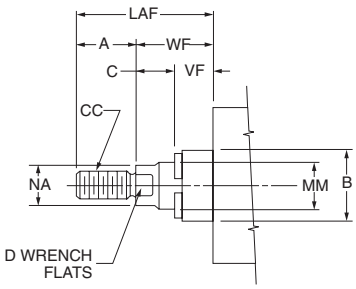


Thread Style 9
(NFPA Style SF)
Short Female

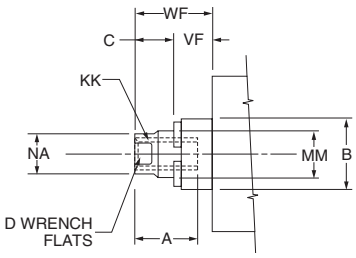


**"Special Thread" Style 3**

Special thread, extension, rod eye, blank, etc., are also available.

To order specify "Style 3" and give desired dimensions for CC or KK, A and WF.

If otherwise special, furnish dimensioned sketch.

## Table 1—Envelope and Mounting Dimensions

| Bore | BD | E | EE (NPTF) | G | J | K | TD +0.000 -0.001 | TL | TM | UM | UT | UV | Add Stroke LF | Add Stroke P | Style DD Min. Stroke |
|---|---|---|---|---|---|---|---|---|---|---|---|---|---|---|---|
| **5** | 2 | 5 1/2 | 1/2 | 1.66 | 1.22 | 7/16 | 1.000 | 1 | 6 1/4 | 8 1/4 | 7 1/2 | 6 | 4 1/2 | 2 7/8 | 3/8 |
| **6** | 2 1/2 | 6 1/2 | 3/4 | 1.91 | 1.41 | 7/16 | 1.375 | 1 3/8 | 7 5/8 | 10 3/8 | 9 1/4 | 7 | 5 | 3 1/8 | 7/8 |
| **8** | 2 1/2 | 8 1/2 | 3/4 | 1.81 | 1.44 | 9/16 | 1.375 | 1 3/8 | 9 3/4 | 12 1/2 | 11 1/4 | 9 1/2 | 5 1/8 | 3 1/4 | 5/8 |

## Table 2—Rod Dimensions

## Table 3—Envelope and Mounting Dimensions

| Bore Size | Rod No. | Rod Dia. MM | Thread Style 8 CC | Thread Style 4 & 9 KK | A | B +0.000 -0.002 | C | D | LAF | NA | VF | WF | Y | XG | ▲ Min. XI | Add Stroke XJ | Add Stroke ZJ |
|---|---|---|---|---|---|---|---|---|---|---|---|---|---|---|---|---|---|
| **5** | 1 | 1 | 7/8-14 | 3/4-16 | 1 1/8 | 1.499 | 5/8 | 7/8 | 2 1/2 | 15/16 | 3/4 | 1 3/8 | 2 7/16 | 2 1/4 | 4 1/16 | 5 1/4 | 5 7/8 |
| | 3 | 1 3/8 | 1 1/4-12 | 1-14 | 1 5/8 | 1.999 | 7/8 | 1 1/8 | 3 1/4 | 1 5/16 | 3/4 | 1 5/8 | 2 11/16 | 2 1/2 | 4 5/16 | 5 1/2 | 6 1/8 |
| **6** | 1 | 1 3/8 | 1 1/4-12 | 1-14 | 1 5/8 | 1.999 | 7/8 | 1 1/8 | 3 1/4 | 1 5/16 | 3/4 | 1 5/8 | 2 13/16 | 2 5/8 | 4 13/16 | 5 7/8 | 6 5/8 |
| | 3 | 1 3/4 | 1 1/2-12 | 1 1/4-12 | 2 | 2.374 | 13/16 | 1 1/2 | 3 7/8 | 1 11/16 | 1 1/16 | 1 7/8 | 3 1/16 | 2 7/8 | 5 1/16 | 6 1/8 | 6 7/8 |
| **8** | 1 | 1 3/8 | 1 1/4-12 | 1-14 | 1 5/8 | 1.999 | 7/8 | 1 1/8 | 3 1/4 | 1 5/16 | 3/4 | 1 5/8 | 2 3/4 | 2 5/8 | 4 3/4 | 6 | 6 3/4 |
| | 3 | 1 3/4 | 1 1/2-12 | 1 1/4-12 | 2 | 2.374 | 13/16 | 1 1/2 | 3 7/8 | 1 11/16 | 1 1/16 | 1 7/8 | 3 | 2 7/8 | 5 | 6 1/4 | 7 |

▲Dimension "XI" to be specified by customer.



**Parker Hannifin Corporation**
Actuator Division
Wadsworth, Ohio USA

## How to Use Double Rod Cylinder Dimensioned Drawings

To determine dimensions for a double rod cylinder, first refer to the desired single rod mounting style cylinder shown on preceding pages of this catalog. After selecting necessary dimensions from that drawing, return to this page and supplement the single rod dimensions with those shown in the drawings and dimension table below. Note that double rod cylinders have a head (Dim. G) at both ends and that dimension LG replaces LF and $P_K$ replaces P, etc.

The double rod dimensions differ from, or are in addition to those for single rod cylinders shown on preceding pages and provide the information needed to completely dimension a double rod cylinder.

On a double rod cylinder, where the two rod ends are different, be sure to clearly state which rod end is to be assembled at which end.

**1¼" to 4" Bores**

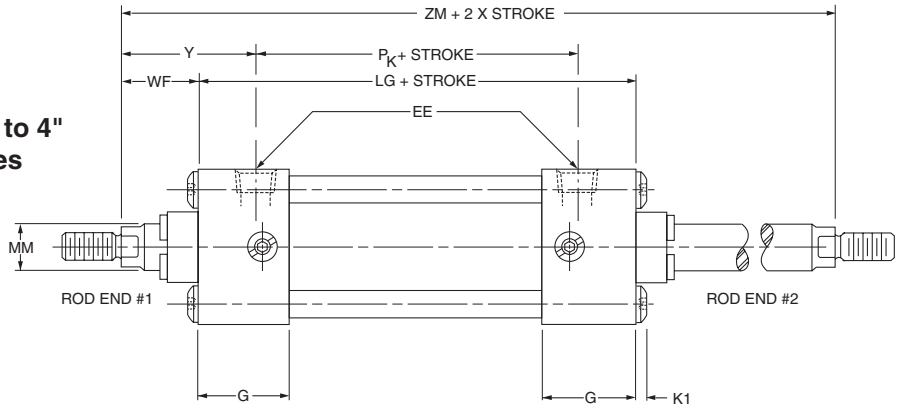


| Mounting Styles for Single Rod Models | Corresponding Mounting Styles for Double Rod Models |
|---|---|
| TB | KTB |
| J [1] | KJ [1] |
| C* | KC* |
| D* | KD* |
| DD | KDD |
| G [2] | KG [2] |
| T | KT |
| TD | KTD |
| F | KF |

* Mounting styles C and D are not available in 1¼" bore.

[1] Not available in 8" bore.

[2] Not available in 5" to 8" bores.

**5" to 8" Bores**

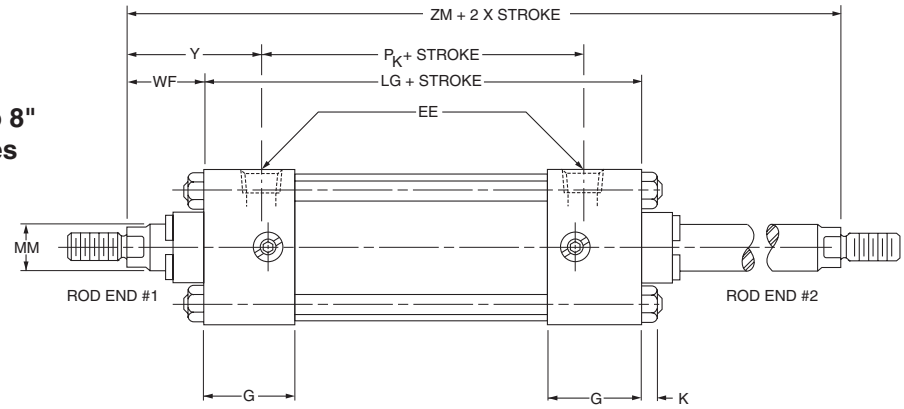


All dimensions are in inches and apply to standard rod sizes only. For alternate rod sizes, determine all envelope dimensions (within LD dim.) as described above and then use appropriate rod end dimensions for proper rod size from single rod cylinder.

| Bore | Rod Dia. MM | Add Stroke | | | | | | | | Add 2X Stroke |
|---|---|---|---|---|---|---|---|---|---|---|
| | | LG | $P_K$ | $SA_K$ | $XA_K$ | $SS_K$ | $SN_K$ | $SE_K$ | $XE_K$ | ZM |
| **1¼** | ½ | 3 13/16 | 2 5/16 | 5 11/16 | 5 3/4 | * | 1 15/16 | 6 1/16 | 5 15/16 | 5 13/16 |
| **1½** | 5/8 | 4 1/8 | 2 3/8 | 6 1/8 | 6 1/8 | 3 3/8 | 2 1/4 | 6 3/8 | 6 1/4 | 6 1/8 |
| **2** | 5/8 | 4 1/8 | 2 3/8 | 6 1/8 | 6 1/8 | 3 3/8 | 2 1/4 | 6 3/4 | 6 7/16 | 6 1/8 |
| **2½** | 5/8 | 4 1/4 | 2 3/8 | 6 1/4 | 6 1/4 | 3 1/2 | 2 3/8 | 7 1/8 | 6 11/16 | 6 1/4 |
| **3¼** | 1 | 4 3/4 | 2 5/8 | 7 1/4 | 7 3/8 | 3 3/4 | 2 5/8 | 7 3/4 | 7 5/8 | 7 1/2 |
| **4** | 1 | 4 3/4 | 2 5/8 | 7 1/4 | 7 3/8 | 3 3/4 | 2 5/8 | 8 | 7 3/4 | 7 1/2 |
| **5** | 1 | 4 15/16 | 2 13/16 | 7 11/16 | 7 11/16 | 3 9/16 | 2 13/16 | — | — | 7 11/16 |
| **6** | 1 3/8 | 5 1/2 | 3 1/8 | 8 1/4 | 8 1/2 | 4 1/8 | 3 1/8 | — | — | 8 3/4 |
| **8** | 1 3/8 | 5 1/2 | 3 1/4 | 9 1/8 | 8 15/16 | 4 1/8 | 3 1/8 | — | — | 8 3/4 |
| **Replaces Dimension** | | **LF** | **P** | **SA** | **XA** | **SS** | **SN** | **SE** | **XE** | **—** |
| **On Single Rod Mounting Styles** | | **All Styles** | | **CB** | | **C** | **F** | **G** | | **All** |

*Mounting styles C and D are not available in 1¼" bore.



**Parker Hannifin Corporation**
Actuator Division
Wadsworth, Ohio USA

C086

## Rod End Dimensions—Basic Cylinder, Hydraulic Option (Series 2ML)

Thread Style 4
(NFPA Style SM)
Small Male

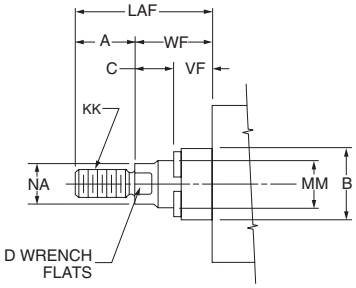


Thread Style 8
(NFPA Style IM)
Intermediate Male

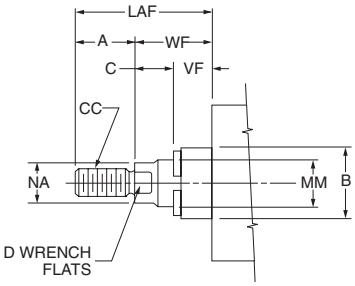


Thread Style 9
(NFPA Style SF)
Short Female

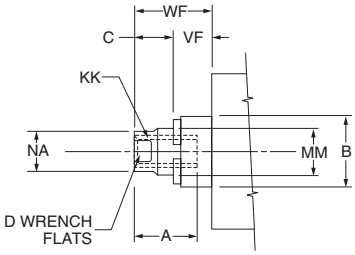


**"Special Thread" Style 3**

Special thread, extension, rod eye, blank, etc., are also available.

To order specify "Style 3" and give desired dimensions for CC or KK, A and W or WF.

If otherwise special, furnish dimensioned sketch.

## Gland Dimensions – Series 2ML Hydraulic Cylinders*

| Bore Size | Rod Dia. MM | A | B +0.000 -0.002 | C | LAF | NA | VF | WF |
|---|---|---|---|---|---|---|---|---|
| 1 1/2 | 5/8 | 3/4 | 1.124 | 5/16 | 1 3/4 | 9/16 | 11/16 | 1 |
| | 1 | 1 1/8 | 1.499 | 9/16 | 2 1/2 | 15/16 | 13/16 | 1 3/8 |
| 2 | 5/8 | 3/4 | 1.124 | 5/16 | 1 3/4 | 9/16 | 11/16 | 1 |
| | 1 | 1 1/8 | 1.499 | 9/16 | 2 1/2 | 15/16 | 13/16 | 1 3/8 |
| 2 1/2 | 5/8 | 3/4 | 1.124 | 5/16 | 1 3/4 | 9/16 | 11/16 | 1 |
| | 1 | 1 1/8 | 1.449 | 9/16 | 2 1/2 | 15/16 | 13/16 | 1 3/8 |
| 3 1/4 | 1 | 1 1/8 | 1.449 | 9/16 | 2 1/2 | 15/16 | 13/16 | 1 3/8 |
| | 1 3/8 | 1 5/8 | 1.999 | 11/16 | 3 1/4 | 1 5/16 | 15/16 | 1 5/8 |
| 4 | 1 | 1 1/8 | 1.449 | 9/16 | 2 1/2 | 15/16 | 13/16 | 1 3/8 |
| | 1 3/8 | 1 5/8 | 1.999 | 11/16 | 3 1/4 | 1 5/16 | 15/16 | 1 5/8 |
| 5 | 1 | 1 1/8 | 1.449 | 9/16 | 2 1/2 | 15/16 | 13/16 | 1 3/8 |
| | 1 3/8 | 1 5/8 | 1.999 | 11/16 | 3 1/4 | 1 5/16 | 15/16 | 1 5/8 |
| 6 | 1 3/8 | 1 5/8 | 1.999 | 11/16 | 3 1/4 | 1 5/16 | 15/16 | 1 5/8 |
| | 1 3/4 | 2 | 2.374 | CONSULT FACTORY | 3 7/8 | 1 11/16 | CONSULT FACTORY | 1 7/8 |
| 8 | 1 3/8 | 1 5/8 | 1.999 | 11/16 | 3 1/4 | 1 5/16 | 15/16 | 1 5/8 |
| | 1 3/4 | 2 | 2.374 | CONSULT FACTORY | 3 7/8 | 1 11/16 | CONSULT FACTORY | 1 7/8 |

*Not available in 1 1/4" bore.



**Parker Hannifin Corporation**
Actuator Division
Wadsworth, Ohio USA

## Parker "Style 55" Piston Rod End

Rod end flange coupling for Parker Series 2MA Pneumatic Cylinders:

- Simplifies alignment
- Reduces assembly time
- Allows full rated pneumatic pressure in push and pull directions
- Available in 5/8" through 1 3/4" piston rod diameters

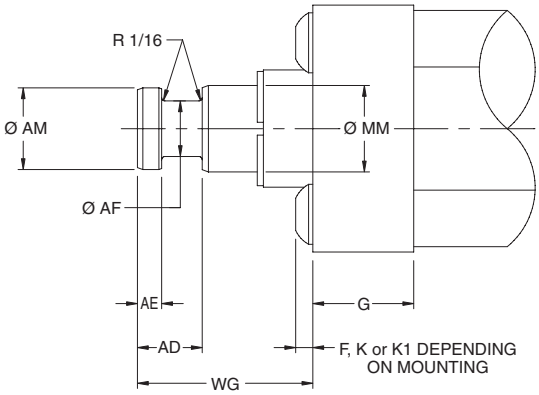


**Series 2MA**

### How To Order

Complete Model Number and place a "55" in the Piston Rod End designator position.

Example: 2.00 J2MAU155 x 12.000

Consult factory for availability of mounting accessories and hardware.

### Dimensions Style 55 Rod End

| MM Rod Dia. | AD | AE | AF | AM | WG |
|---|---|---|---|---|---|
| 5/8 | 5/8 | 1/4 | 3/8 | .57 | 1 3/4 |
| 1 | 15/16 | 3/8 | 11/16 | .95 | 2 3/8 |
| 1 3/8 | 1 1/16 | 3/8 | 7/8 | 1.32 | 2 3/4 |
| 1 3/4 | 1 5/16 | 1/2 | 1 1/8 | 1.70 | 3 1/8 |

See Dimensions pages for F, G and K or K1 per bore size.

## Split Couplers and Weld Plates

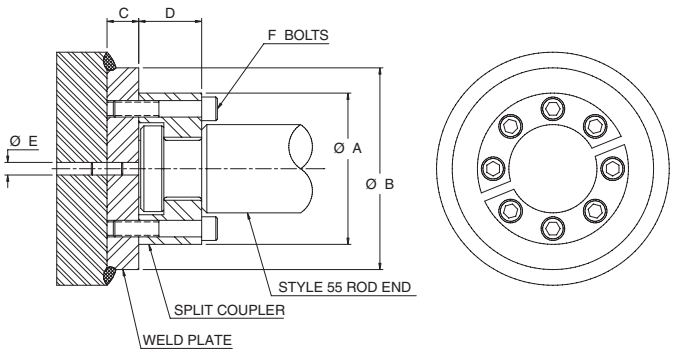


**⚠WARNING:** Piston rod separation from the machine member can result in severe personal injury or even death to nearby personnel. The cylinder user must make sure the weld holding the weld plate to the machine is of sufficient quality and size to hold the intended load. The cylinder user must also make sure the bolts holding split coupler to the weld plate are of sufficient strength to hold the intended load and installed in such a way that they will not become loose during the machine's operation.

NOTE: Screws are not included with split coupler or weld plate.

### Table 1 — Part Numbers and Dimensions

| Rod Dia. | A | B | C | D | E | F | Bolt Size | Bolt Circle | Split Coupler Part No. | Weld Plate Part No. |
|---|---|---|---|---|---|---|---|---|---|---|
| 0.625 | 1.50 | 2.00 | 0.50 | 0.56 | 0.250 | 4 | #10-24 x .94 LG | 1.125 | 147234 0062 | 148174 0062 |
| 1.00 | 2.00 | 2.50 | 0.50 | 0.88 | 0.250 | 6 | .250-20 x 1.25 LG | 1.500 | 147234 0100 | 148174 0100 |
| 1.375 | 2.50 | 3.00 | 0.63 | 1.00 | 0.250 | 6 | .312-18 x 1.50 LG | 2.000 | 147234 0138 | 148174 0138 |
| 1.75 | 3.00 | 4.00 | 0.63 | 1.25 | 0.250 | 8 | .312-18 x 1.75 LG | 2.375 | 147234 0175 | 148174 0175 |



**Parker Hannifin Corporation**
Actuator Division
Wadsworth, Ohio USA

## Metric Rod Threads

Standard Metric Thread Sizes for Piston Rod Thread Type M

| Rod Dia. MM | Styles 4 & 9 KK | Style 8 CC |
|---|---|---|
| 5/8 | M10 x 1.5 | M12 x 1.5 |
| 1 | M20 x 1.5 | M22 x 1.5 |
| 1 3/8 | M26 x 1.5 | M30 x 2.0 |
| 1 3/4 | M33 x 2.0 | M39 x 2.0 |

Note: All other rod end dimensions are standard per catalog

## Check Seal Cushions

### For Increased Productivity and Maximum Performance

The check seal cushion is new and different from ordinary cushion designs. It combines the sealing capabilities of a lipseal for efficient capture of air to effectively cushion and to provide check valve action for quick stroke reversal.

The design also provides “floating cushions” to assure cushion repeatability and long life. At the start of the stroke in each direction, the check valve design allows full flow to piston face with a minimum pressure drop for a maximum power stroke.

Additional benefits of the new check seal cushions are increased productivity and top performance for faster cycle time, minimum wear, easy adjustment and low pressure drop.

The basic cushion design is optional and available on either the head end, cap end or both ends without change in envelope or mounting dimensions. A captive cushion adjusting needle is supplied for easy, precise adjustment on all bore sizes.

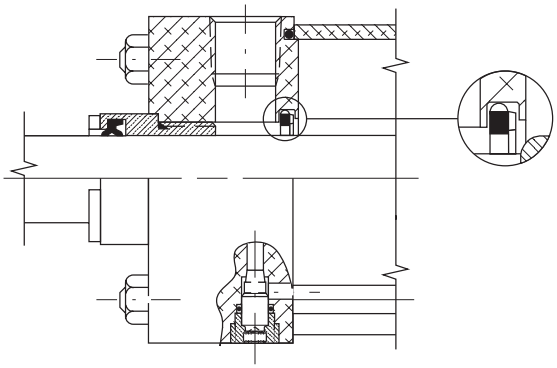

## Bumpers

Parker provides the ultimate in design flexibility by offering two styles of impact dampening bumpers for the 2MA cylinder line in bore sizes ranging from 1½" - 4".

Conventional bumpers can be provided on one or both sides of the piston with a 1/4" stroke loss per bumper. This style of bumper is ideal for applications subjected to high speeds where cycle time may discourage the use of cushions.

Impact dampening bumper seals can be combined with cushions to provide the ideal solution for applications that experience high speed cycling and heavier loads. The bumper seal option combines the features of a low friction, rounded lip seal and impact resistant bumper to provide smooth end of stroke deceleration. With system pressures above 80 PSI, the bumper seal option causes minimal stroke loss.

For additional information regarding the bumper seal option, refer to “Bumper Seal Options” page. For instructions on how to order these options, refer to “How To Order” page.

BUMPER OPTION

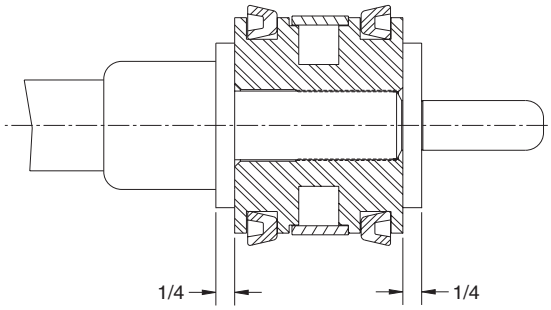


BUMPER SEAL OPTION

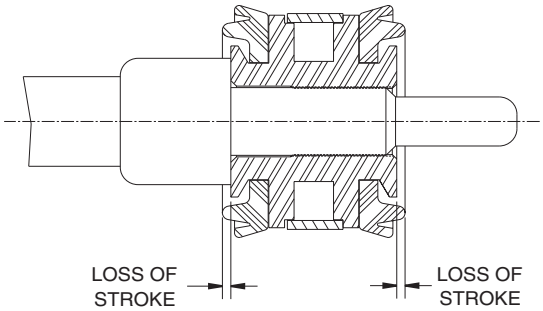




**Parker Hannifin Corporation**
Actuator Division
Wadsworth, Ohio USA

## Bumper Seal Option

Impact dampening Bumper Seals are now optional on all 2MA air cylinders from 1½" to 4" bore. The Bumper Seal piston combines the features of low-friction, rounded lipseals and impact-damping bumpers to provide reduced noise and smoother end-of-stroke deceleration. At pressure greater than 80 PSI, the compressible Buna Nitrile Bumper Seal has minimal effect on stroke loss. When specified, Bumper Seals will be supplied on both ends of the piston, eliminating the need to specify head end or cap end only.

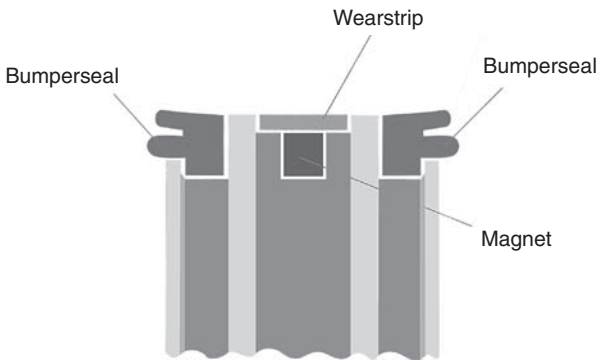


## Summary of Accelerometer Test Results

| Bore Size | Piston Type | Cushioning Efficiency (Maximum G's of Deceleration Force Created) | Cushioning Time (ms) |
|---|---|---|---|
| 1½" | Standard Piston | 13.4 | 22 |
| | Bumper Seal Piston | 5.1 | 22 |
| 2" | Standard Piston | 12.6 | 33 |
| | Bumper Seal Piston | 7.8 | 26 |
| 2½" | Standard Piston | 12.2 | 36 |
| | Bumper Seal Piston | 5.2 | 24 |

## Bumper Seals Reduce Noise

The special profile of the Bumper Seal prevents the piston from noisily banging into the end cap at the end of stroke. Independent testing shows that the Bumper Seal, when combined with cushions, will absorb the final piston inertia and reduce the stroke noise by as much as 20 dB. The Sound Level Comparison graph illustrates the noise-reducing effects of the Bumper Seal piston when combined with cushions.

Impact noise was recorded at a distance of 3 feet from the front of the cylinder, inside a semi-anechoic chamber. Cylinders were operating at 95 PSI.

## Sound Level Comparison

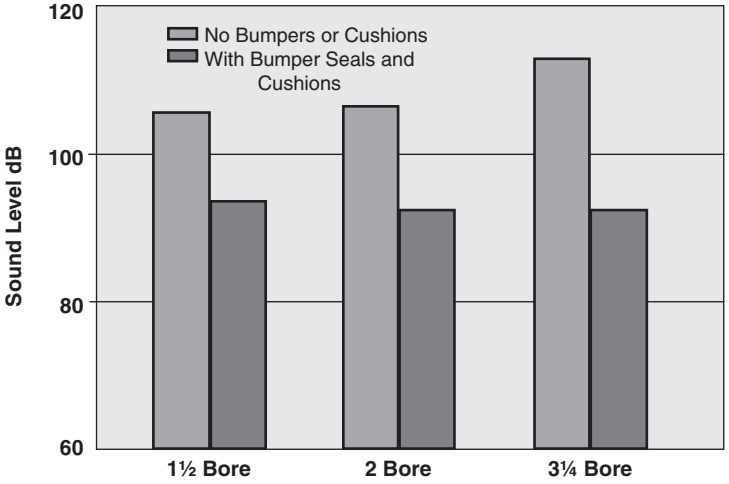


## Bumper Seals have Minimum Effect on Stroke Length

The accompanying chart depicts typical amounts of overall stroke loss incurred at various system pressures. The amount of stroke loss may vary slightly due to design tolerances of: seal size, variance in seal durometer, and compression set associated with cylinder wear. To determine the stroke loss at either end of the cylinder, divide the values by two.

| Pressure (PSI) | Typical Overall Loss of Stroke (inch) by Bore Size | | | | |
|---|---|---|---|---|---|
| | 1½" | 2" | 2½" | 3¼" | 4" |
| 0 | 0.16 | 0.13 | 0.19 | 0.22 | 0.22 |
| 20 | 0.12 | 0.11 | 0.12 | 0.18 | 0.18 |
| 40 | 0.10 | 0.08 | 0.09 | 0.12 | 0.12 |
| 60 | 0.08 | 0.07 | 0.07 | 0.09 | 0.09 |
| 80 | 0.06 | 0.05 | 0.05 | 0.06 | 0.06 |
| 100 | 0.05 | 0.03 | 0.02 | 0.04 | 0.04 |



**Parker Hannifin Corporation**
Actuator Division
Wadsworth, Ohio USA

## Linear Position Sensor for Continuous Position Feedback

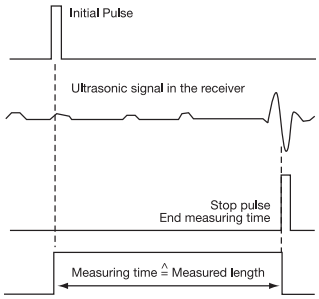


Generation of the ultrasonic torsion pulse in a metallic conductor based on the principle of magnetostriction.

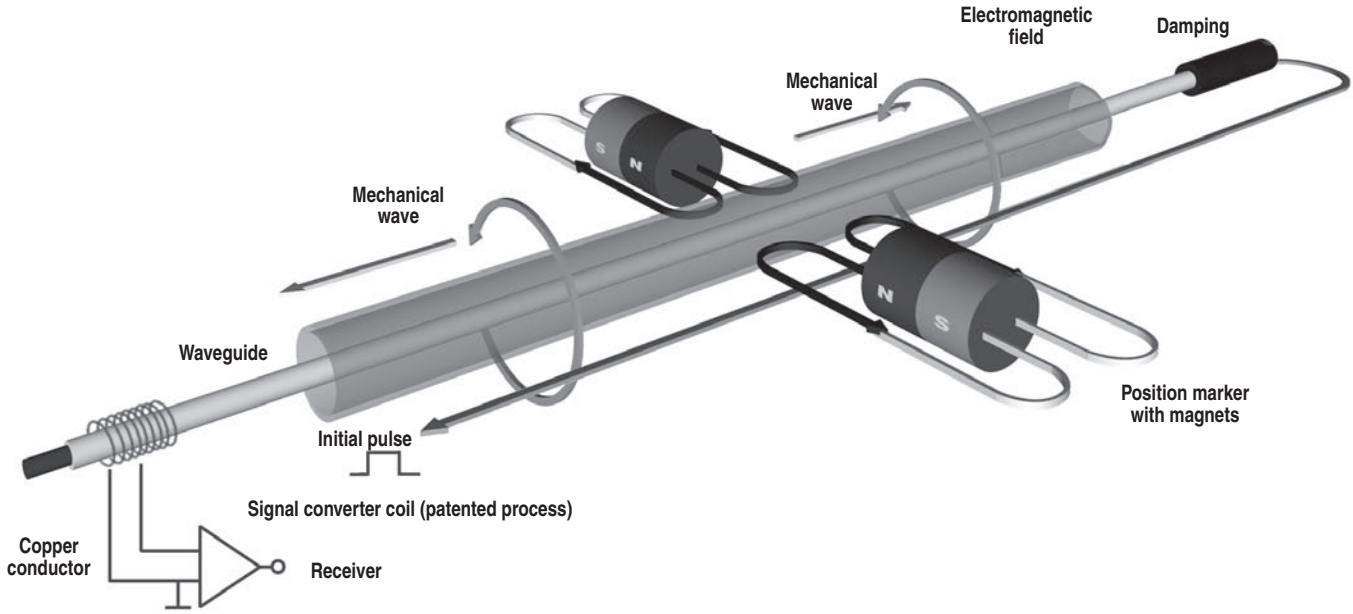


## Principles of Operation

The measuring element ("waveguide"), consists of a special nickel-alloy tube.

A copper conductor is introduced through the length of this tube. The start of measurement is initiated by a short current pulse.

This current generates a circular magnetic field which rotates around the waveguide. A permanent magnet at the point of measurement is used as the marker element, whose lines of field run at right angles to the electromagnetic field. In the area on the waveguide where the two fields intersect, a magneto-strictive effect causes an elastic deformation of the waveguide, which propagates along the wave guide in both directions in the form of a mechanical wave.

The propagation velocity of this wave in the waveguide is 2830 m/s, and is nearly insensitive to environmental effects (e.g., temperature, shock, contamination).

The component of the wave which reaches the far end of the waveguide is damped there, whereas the component which arrives at the signal converter is changed into an electrical signal by reversing the magnetostrictive effect. The wave travel time from its point of origin to the signal converter is directly proportional to the distance between the permanent magnet and the signal converter. A time measurement then allows the distance to be determined with extremely high accuracy.

### Design

The transducers are made to the same safety and reliability standards for use in the harshest conditions:

- The electronics unit is compactly designed using SMD technology. The boards are protected in a space-saving, rugged aluminum extruded housing.
- The waveguide is protected in the extruded aluminum housing.

### Quality

Each and every transducer undergoes a specially designed, computer-controlled testing procedure which includes 100% checking of all specified data.



**Parker Hannifin Corporation**
Actuator Division
Wadsworth, Ohio USA

C086

The drawings below show that the Linear Position Sensor is longer than the cylinder of the same stroke length. The sensor overhang on the head end of the cylinder, as indicated by dimension A, may be eliminated by adding stop tubing, which effectively increases the gross stroke of the cylinder. The recommended stop tube lengths are provided in the table below for each bore size. The examples show that the electrical stroke of the sensor will always match the **net** stroke of the cylinder.

As a result of the limited sensing range of the sensor, it will overhang at the cap end of the cylinder by the amount of dimension B.

## NO STOP TUBE

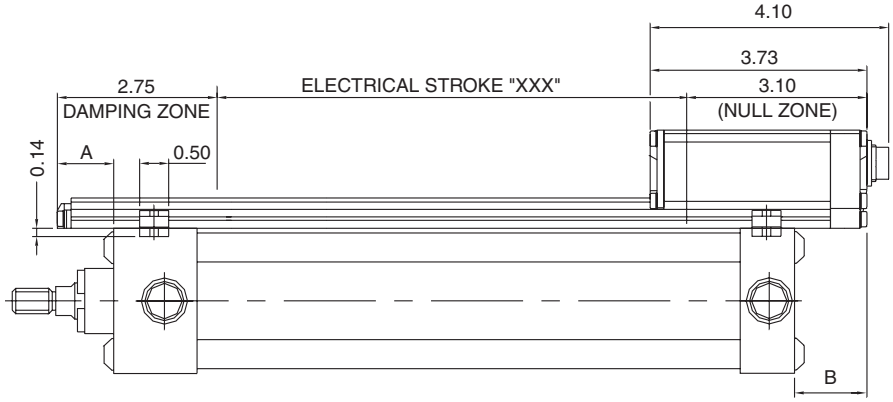


Example A: 12” Stroke cylinder without stop tube equals 12” Electrical Stroke for the Sensor.

## WITH STOP TUBE

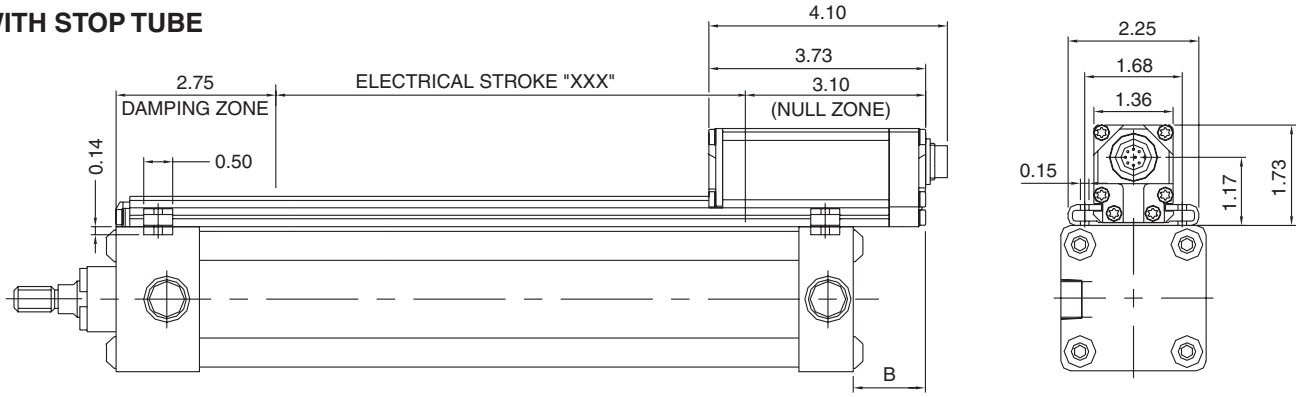


Example B: To eliminate sensor overhang on the head end of a 2.0" bore cylinder, add 1.0" of recommended stop tube length. The cylinder gross stroke becomes 13" and the net stroke remains 12". Specify a sensor with an electrical stroke of 12". Note that the electrical stroke equals cylinder **net** stroke length.

Example C: To eliminate sensor overhang on the head end of a 5.0" bore cylinder, add 0.625" of recommended stop tube length. The cylinder gross stroke becomes 12.625" and the net stroke remains 12". Specify a sensor with an electrical stroke of 12". Note that the electrical stroke equals cylinder **net** stroke length.

| Bore | Rod Code | Rod Diameter | No Stop Tube | | With Stop Tube | | |
|---|---|---|---|---|---|---|---|
| | | | A | B | Stop Tube Length | $A_1$ | B |
| 2 | 1 | 5/8 | 0.95 | 1.3 | 1.0 | 0 | 1.3 |
| | 3 | 1 | | | | | |
| 2 1/2 | 1 | 5/8 | 0.90 | 1.25 | 1.0 | 0 | 1.25 |
| | 3 | 1 | | | | | |
| 3 1/4 | 1 | 1 | 0.64 | 1.0 | 0.75 | 0 | 1.0 |
| | 3 | 1 3/8 | | | | | |
| 4 | 1 | 1 | 0.63 | 0.99 | 0.75 | 0 | 0.99 |
| | 3 | 1 3/8 | | | | | |
| 5 | 1 | 1 | 0.55 | 0.79 | 0.625 | 0 | 0.79 |
| | 3 | 1 3/8 | | | | | |
| 6 | 1 | 1 3/8 | 0.47 | 0.46 | 0.50 | 0 | 0.45 |
| | 3 | 1 3/4 | | | | | |
| 8 | 1 | 1 3/8 | 0.28 | 0.44 | 0.375 | 0 | 0.44 |
| | 3 | 1 3/4 | | | | | |



**Parker Hannifin Corporation**
Actuator Division
Wadsworth, Ohio USA

C086

| | | |
|---|---|---|
| Output signal | analog | analog |
| Transducer interface | **A** | **E** |
| Input interface | analog | analog |

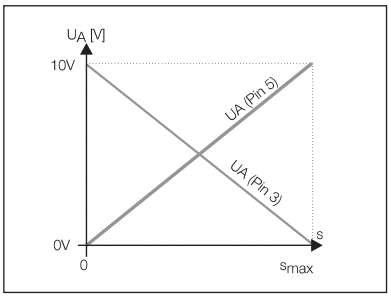


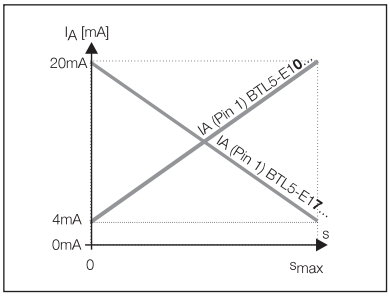


| | | |
|---|---|---|
| Ordering code | BTL5-**A11**-M_ _ _ _-RSU022S32 | BTL5-**E1**_-M_ _ _ _-RSU022S32 |
| Output voltage | **0...10 V** | |
| Output current | | **4...20 mA** |
| Load current | max. 10 mA | |
| max. ripple. | ≤ 5 mV | |
| Load resistance | | ≤ 500 Ohm |
| System resolution | ≤ **0.1 mV** | ≤ **0.2 µA** |

| | | |
|---|---|---|
| Hysteresis | | ≤ 4 µm |
| Repeatability | | ≤ 6 µm (hysteresis + resolution) |
| Output update rate | | STANDARD = 1 ms ≤1400 mm |
| max. non-linearity | | ±100 µm to 500 mm stroke |
| | | ±0.02 % 501...3606 mm stroke |
| Temperature coefficient | Voltage output | [150 µV/°C + (5 ppm/°CxPxU/L)]xDT |
| | Current output | [0.6 µA/°C + (10 ppm/°CxPxI/L)]x DT |
| Shock loading | | 100 g/11 ms per IEC 68-2-27 |
| Vibration | | 12 g, 10...2000 Hz per IEC 68-2-6 |
| Traverse velocity of magnet | | any |
| Operating voltage | | 24 V DC ± 20% |
| Current draw | | ≤150 mA |
| Polarity reversal protected | | yes |
| Overvoltage protection | | Transzorb protection diodes |
| Dielectric constant | | 500 V (Ground to housing) |
| Operating temperature | | –40...185 °F (-40...85°C) |
| Storage temperature | | –40...212 °F (-40...100°C) |

| S32 Pin assignments | Pin | Color | BTL5-**A11**... | BTL5-**E1**...BTL5-**E1**... |
|---|---|---|---|---|
| Output signals | 1 | YE | not used | 4...20 mA 20...4 mA |
| | 2 | GY | signal GND | 0 V output |
| | 3 | PK | 10...0 V | 10...0 V |
| | 5 | GN | 0...10 V | 0...10 V |
| Supply voltage | 6 | BU | GND | GND |
| | 7 | BN | +24 V DC | +24 V DC |
| | 8 | WH | (GND) | (GND) |

Connect shield to housing.

**Specifications subject to change.**

**Please enter code for output signal and nominal stroke in ordering code.**

BTL transducers with analog outputs are available in the ranges of 0...10V, 4...20mA with rising or falling signal.

Ordering Sample:

**BTL5-A11-M_ _ _ _-R-SU 022S32**

**Output signal**
1 increasing and decreasing (for A)
0 increasing
7 decreasing (for E)

**Standard stroke lengths (mm)**



**Parker Hannifin Corporation**
Actuator Division
Wadsworth, Ohio USA

C086

## M Interface

Differential **START/STOP** control-specific interface.

## P Interface

Compatible with BTA processors and various OEM controls. Reliable signal transmission, even over cable lengths up to 500 m (1640ft.) between BTA and BTL, is assured by the especially noise-immune RS485 differential drivers and receivers. Noise signals are effectively suppressed.

| Series | BTL5 Low Profile | BTL5 Low Profile |
|---|---|---|
| Transducer interface | pulse **M** | pulse **P** |
| User interface | pulse **M** | pulse **P** |

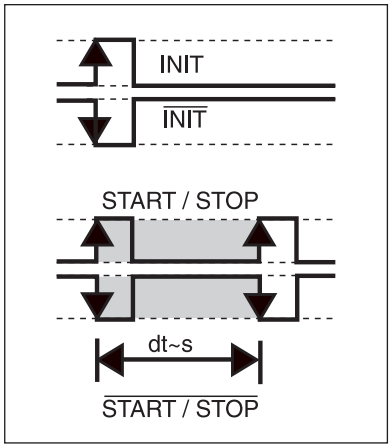


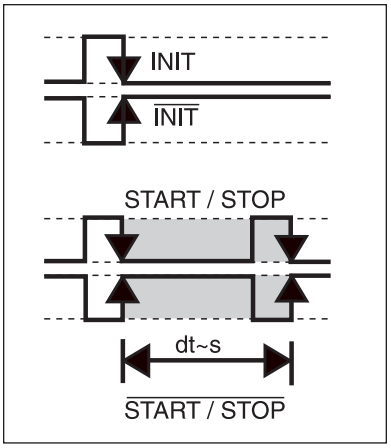


| Ordering code | BTL5-**M**1-M_ _ _ _-RSU022S32 | BTL5-**P**1-M_ _ _ _-RSU022S32 |
|---|---|---|
| System resolution | Process-dependent/control dependent | |
| Repeatability | Hysteresis + Resolution | |
| Resolution | ≤ 2 µm | |
| Hysteresis | ≤ 4 µm | |
| Standard sampling rate | fSTANDARD = 1 kHz ≤1400 mm | |
| max. non-linearity | ±100 µm to 500 mm nominal stroke | |
| | ±0.02 % 501...3750 mm nominal stroke | |
| Temperature coefficient of overall system | (6 µm + 5 ppm x L)/°C | |
| Traverse velocity of magnet | any | |
| Operating voltage | 24 V DC ±20 % or ±15V DC ±2% (optional) | |
| Current draw | ≤100 mA | |
| Operating temperature | –40...185 °F (-40...85°C) | |
| Storage temperature | –40...212 °F (-40...100°C) | |

| S32 Pin assignments | | Pin | Color | BTL5-**M**1-M... | BTL5-**P**1-M... |
|---|---|---|---|---|---|
| Input/output signals | Input | 1 | YE | INIT | INIT |
| | Output | 2 | GY | START/STOP | START/STOP |
| | Input | 3 | PK | INIT | INIT |
| | Output | 5 | GN | START/STOP | START/STOP |
| Supply voltage | | 6 | BU | GND | GND |
| | | 7 | BN | +24 V DC | +24 V DC |
| | | 8 | WH | (GND) | (GND) |

Shield connected to housing

**Specifications subject to change.**

**Please enter code for nominal stroke in ordering code.**

Ordering Sample:

**BTL5-P1-M_ _ _ _-R-SU 022S32**

**Output signal**

**Standard stroke lengths (mm)**



**Parker Hannifin Corporation**
Actuator Division
Wadsworth, Ohio USA

## Sensor Ordering Code

**BTL-5 - A 1 1 - M 0305 - R SU022 S32**

**Output Signal**

| | |
|---|---|
| **A** | 0...10V |
| **E** | 4...20mA |
| **M** | Differential Start/Stop, leading edge active |
| **P** | Differential Start/Stop, trailing edge active |

**Nominal Stroke**

Specify whole mm using 4 digits, i.e. 0305 = 305mm active electrical stroke*

* Electrical stroke = net cylinder stroke.

**Connection Type**

| | |
|---|---|
| **S32** | 8-pin Quick Disconnect Metal Connector |
| **KA05** | Integral Axial Cable (specify cable length in whole meters using 2 digits, i.e. 05 = 5m) |

**Supply Voltage**

| | |
|---|---|
| **1** | 24 V ±20% |

**Housing Geometry**

| | |
|---|---|
| **R** | Low Profile Extrusion |

**Output Signal (Analog only)**

| | |
|---|---|
| **1** | $V_{min}$ or $V_{max}$ at Connector End, i.e. user selectable rising or falling* |
| **0** | $I_{min}$ at Connector End (rising toward opposite end)** |
| **7** | $I_{max}$ at Connector End (falling toward opposite end)** |

* Available only with 0...10V output signal (A).

**Available only with 4...20mA output signal (E).

*Please see page C4 to order 2MA cylinder configuration.*

## Standard Lengths

**Electrical Stroke**

| inches | mm |
|---|---|
| 2 | 0051 |
| 3 | 0077 |
| 4 | 0102 |
| 5 | 0127 |
| 6 | 0152 |
| 7 | 0178 |
| 8 | 0203 |
| 9 | 0230 |
| 10 | 0254 |
| 11 | 0280 |
| 12 | 0305 |
| 13 | 0330 |

| inches | mm |
|---|---|
| 15 | 0381 |
| 16 | 0407 |
| 18 | 0457 |
| 20 | 0508 |
| 22 | 0560 |
| 24 | 0610 |
| 26 | 0661 |
| 28 | 0711 |
| 30 | 0762 |
| 32 | 0813 |
| 36 | 0914 |
| 40 | 1016 |

| inches | mm |
|---|---|
| 42 | 1067 |
| 48 | 1220 |
| 50 | 1270 |
| 60 | 1524 |
| 70 | 1778 |
| 80 | 2032 |
| 90 | 2286 |
| 100 | 2540 |
| 110 | 2794 |
| 120 | 3048 |



**Parker Hannifin Corporation**
Actuator Division
Wadsworth, Ohio USA

## Cylinder Accessories

Rod end accessories can be selected by cylinder rod end thread size from Table A & B below.
Mating parts for rod end accessories are listed just to the right of the knuckle or clevis selected.
Mounting plates for style MP1 & MP4 cylinder mounts are selected by bore size from Table C.

| Rod End Thread Size | TABLE A | | | TABLE B | | | TABLE C | | |
|---|---|---|---|---|---|---|---|---|---|
| | Female Rod Clevis | Mating Parts | | Knuckle | Mating Parts | | Bore Size | Mounting Plates | |
| | | Eye Bracket | Pivot Pin | | Clevis Bracket | Pivot Pin | | For Mtg. Style MP1 Cylinder | For Mtg. Style MP4 Cylinder |
| **5/16-24** | 1458030031 | 1458060031 | – | 1458040031 | 1458050044 | 0856640044 | **1 1/4** | 32-27021 | 32-27020 |
| **7/16-20** | 1458030044 | 1458060050 | 0856640050 | 1458040044 | 1458050050 | 0856640050 | **1 1/2** | 1458060050 | 1458050050 |
| **1/2-20** | 1458030050 | 1458060050 | 0856640050 | 1458040050 | 1458050050 | 0856640050 | **2** | 1458060050 | 1458050050 |
| **3/4-16** | 1458030075 | 1458060075 | 0856640075 | 1458040075 | 1458050075 | 0856640075 | **2 1/2** | 1458060050 | 1458050050 |
| **7/8-14** | 1458030088 | 1458060100 | 0856640100 | 1458040088 | 1458050100 | 0856640100 | **3 1/4** | 1458060075 | 1458050075 |
| **1-14** | 1458030100 | 1458060100 | 0856640100 | 1458040100 | 1458050100 | 0856640100 | **4** | 1458060075 | 1458050075 |
| **1 1/4-12** | 1458030125 | 1458060138 | 0856640138 | 1458040125 | 1458050138 | 0856640138 | **5** | 1458060075 | — |
| **1 1/2-12** | 1458030150 | 1458060175 | 0856640175 | 1458040150 | 1458050175 | 0856640175 | **6** | 1458060100 | — |
| | | | | | | | **8** | 1458060100 | — |

## Corrosion Resistant Accessories (2MAE Applicable)

| Rod End Thread Size | TABLE A | | | TABLE B | | | TABLE C | | |
|---|---|---|---|---|---|---|---|---|---|
| | | Mating Parts | | | Mating Parts | | | Mounting Plates | |
| | Female Rod Clevis | Eye Bracket | Pivot Pin | Knuckle | Clevis Bracket | Pivot Pin | Bore Size | For Mtg. Style BB & BC Cylinder | For Mtg. Style BE Cylinder |
| **7/16-20** | 145803004L | 145806005L | 0872480050 | 145804004L | 145805005L | 0872480050 | **1 1/2** | 145806005L | 145805005L |
| **1/2-20** | 145803005L | 145806005L | 0872480050 | 145804005L | 145805005L | 0872480050 | **2** | 145806005L | 145805005L |
| **3/4-16** | 145803007L | 145806007L | 0872480075 | 145804007L | 145805007L | 0872480075 | **2 1/2** | 145806005L | 145805005L |
| **7/8-14** | 145803008L | 145806010L | 0872480100 | 145804008L | 145805010L | 0872480100 | **3 1/4** | 145806007L | 145805007L |
| **1-14** | 145803010L | 145806010L | 0872480100 | 145804010L | 145805010L | 0872480100 | **4** | 145806007L | 145805007L |
| **1 1/4-12** | 145803012L | 145806013L | 0872480138 | 145804012L | 145805013L | 0872480138 | | | |

## Pivot Pin

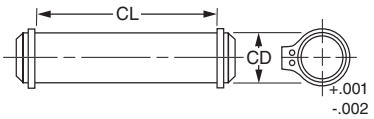


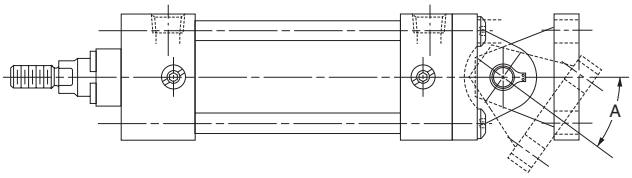


| Symbol | 0856640044 | 0856640050 | 0856640075 | 0856640100 | 0856640138 | 0856640175 |
|---|---|---|---|---|---|---|
| **CD** | 7/16 | 1/2 | 3/4 | 1 | 1 3/8 | 1 3/4 |
| **CL** | 1 5/16 | 1 7/8 | 2 5/8 | 3 1/8 | 4 1/8 | 5 3/16 |
| **Shear Cap. (lbs)** | 6600 | 8600 | 19300 | 34300 | 65000 | 105200 |

**Note:** Pivot Pin must be ordered separately for single lug pivot mounting.

### Maximum Pivot Angle for Rear Clevis Mounts and Accessories

| Bore | 1 1/4 | 1 1/2 | 2 | 2 1/2 | 3 1/4 | 4 | 5 | 6 | 8 |
|---|---|---|---|---|---|---|---|---|---|
| **Angle A** | 55 | 52 | 43 | 29 | 50 | 49 | 45 | 42 | 42 |



**Parker Hannifin Corporation**
Actuator Division
Wadsworth, Ohio USA

## Female Rod Clevis

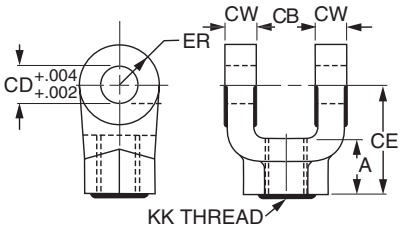


| Symbol | 1458030031* | 1458030044 | 1458030050 | 1458030075 | 1458030088 | 1458030100 | 1458030125 | 1458030150 |
|---|---|---|---|---|---|---|---|---|
| A | 13/16 | 3/4 | 3/4 | 1 1/8 | 1 5/8 | 1 5/8 | 2 | 2 1/4 |
| CB | 11/32 | 3/4 | 3/4 | 1 1/4 | 1 1/2 | 1 1/2 | 2 | 2 1/2 |
| CD | 5/16 | 1/2 | 1/2 | 3/4 | 1 | 1 | 1 3/8 | 1 3/4 |
| CE | 2 1/4 | 1 1/2 | 1 1/2 | 2 1/8 | 2 15/16 | 2 15/16 | 3 3/4 | 4 1/2 |
| CW | 13/64 | 1/2 | 1/2 | 5/8 | 3/4 | 3/4 | 1 | 1 1/4 |
| ER | 19/64 | 1/2 | 1/2 | 3/4 | 1 | 1 | 1 3/8 | 1 3/4 |
| KK | 5/16-24 | 7/16-20 | 1/2-20 | 3/4-16 | 7/8-14 | 1-14 | 1 1/4-12 | 1 1/2-12 |
| Load Capacity (lbs) | 2600 | 4250 | 4900 | 11200 | 18800 | 19500 | 33500 | 45600 |

*Includes Pivot Pin

## Rod Eye Knuckle

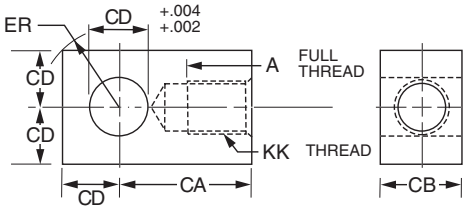


| Symbol | 1458040031 | 1458040044 | 1458040050 | 1458040075 | 1458040088 | 1458040100 | 1458040125 | 1458040150 |
|---|---|---|---|---|---|---|---|---|
| A | 3/4 | 3/4 | 3/4 | 1 1/8 | 1 1/8 | 1 5/8 | 2 | 2 1/4 |
| CA | 1 1/2 | 1 1/2 | 1 1/2 | 2 1/16 | 2 3/8 | 2 13/16 | 3 7/16 | 4 |
| CB | 7/16 | 3/4 | 3/4 | 1 1/4 | 1 1/2 | 1 1/2 | 2 | 2 1/2 |
| CD | 7/16 | 1/2 | 1/2 | 3/4 | 1 | 1 | 1 3/8 | 1 3/4 |
| ER | 19/32 | 23/32 | 23/32 | 1 1/16 | 1 7/16 | 1 7/16 | 1 31/32 | 2 1/2 |
| KK | 5/16-24 | 7/16-20 | 1/2-20 | 3/4-16 | 7/8-14 | 1-14 | 1 1/4-12 | 1 1/2-12 |
| Load Capacity (lbs) | 3300 | 5000 | 5700 | 12100 | 13000 | 21700 | 33500 | 45000 |

## Clevis Bracket

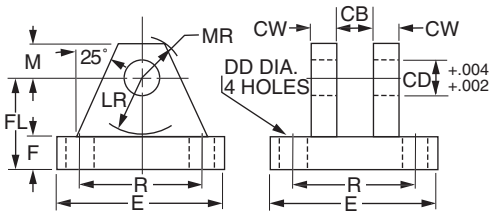


| Symbol | 1458050044 | 32-27020 | 1458050050 | 1458050075 | 1458050100 | 1458050138 | 1458050175 |
|---|---|---|---|---|---|---|---|
| CB | 15/32 | 1 1/64 | 3/4 | 1 1/4 | 1 1/2 | 2 | 2 1/2 |
| CD | 7/16 | .392 | 1/2 | 3/4 | 1 | 1 3/8 | 1 3/4 |
| CW | 3/8 | 3/8 | 1/2 | 5/8 | 3/4 | 1 | 1 1/4 |
| DD | 17/64 | 17/64 | 13/32 | 17/32 | 21/32 | 21/32 | 29/32 |
| E | 2 1/4 | 1 53/64 | 3 1/2 | 5 | 6 1/2 | 7 1/2 | 9 1/2 |
| F | 3/8 | 25/64 | 1/2 | 5/8 | 3/4 | 7/8 | 7/8 |
| FL | 1 | 55/64 | 1 1/2 | 1 7/8 | 2 1/4 | 3 | 3 5/8 |
| LR | 5/8 | 15/32 | 3/4 | 1 3/16 | 1 1/2 | 2 | 2 3/4 |
| M | 3/8 | 25/64 | 1/2 | 3/4 | 1 | 1 3/8 | 1 3/4 |
| MR | 1/2 | 25/64 | 5/8 | 29/32 | 1 1/4 | 1 21/32 | 2 7/32 |
| R | 1.75 | 1.28 | 2.55 | 3.82 | 4.95 | 5.73 | 7.50 |
| Load Capacity (lbs) | 3600 | 2025 | 7300 | 14000 | 19200 | 36900 | 34000 |

## Mounting Plate & Eye Bracket

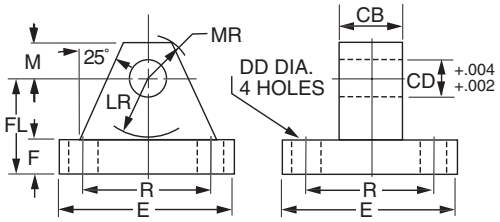


| Symbol | 1458060031 | 32-27021 | 1458060050 | 1458060075 | 1458060100 | 1458060138 | 1458060175 |
|---|---|---|---|---|---|---|---|
| CB | 5/16 | 1 1/64 | 3/4 | 1 1/4 | 1 1/2 | 2 | 2 1/2 |
| CD | 5/16 | .392 | 1/2 | 3/4 | 1 | 1 3/8 | 1 3/4 |
| DD | 17/64 | 17/64 | 13/32 | 17/32 | 21/32 | 21/32 | 29/32 |
| E | 2 1/4 | 1 53/64 | 2 1/2 | 3 1/2 | 4 1/2 | 5 | 6 1/2 |
| F | 3/8 | 25/64 | 3/8 | 5/8 | 7/8 | 7/8 | 1 1/8 |
| FL | 1 | 55/64 | 1 1/8 | 1 7/8 | 2 3/8 | 3 | 3 3/8 |
| LR | 5/8 | 15/32 | 3/4 | 1 1/4 | 1 1/2 | 2 1/8 | 2 1/4 |
| M | 3/8 | 25/64 | 1/2 | 3/4 | 1 | 1 3/8 | 1 3/4 |
| MR | 1/2 | 25/64 | 9/16 | 7/8 | 1 1/4 | 1 5/8 | 2 1/8 |
| R | 1.75 | 1.28 | 1.63 | 2.55 | 3.25 | 3.82 | 4.95 |
| Load Capacity (lbs) | 1700 | 2880 | 4100 | 10500 | 20400 | 21200 | 49480 |



**Parker Hannifin Corporation**
Actuator Division
Wadsworth, Ohio USA

**Parker Hannifin Corporation**
Actuator Division
Wadsworth, Ohio USA