Perform the following steps when dis-assembling, installing mounting kits and re-assembling 2MA Series cylinders

Dis-assembly of cylinder to add Mounting Kit*

1) Un-Torque cylinder mounting fasteners using corner to corner sequence until fasteners are finger tight.

2) Remove all fasteners.

3) Clean mating parts to remove oil, grease and dirt.

4) Fasteners should be clean, dry and burr free.

5) Brush mounting fastener threads thoroughly with anti-seize lubricant.

6) Follow the appropriate procedure below for the desired mounting.

Rear Pivot Mounting Kits - Style BB, BC and BE (Fig. 1)
Place pivot mount over end cap, lining up the four fastener holes in the end cap with the pivot mounting plate. Note that the pivot mount can be rotated allowing for different cylinder port locations. Secure mounting to cylinder cap (finger tight) using the four fasteners. Torque the fasteners to the specifications in the table below.

End Angle Mounting Kit - Style CB (Fig. 2)
The end angles bolt to the front and rear of the cylinder end caps. The spacer plate** provided is to be assembled at the rod end under the angle plate. Line up the two holes of the spacer plate and angle plate with the two fastener holes in the cylinder head. Secure (finger tight) using two fasteners. Repeat this assembly at the opposite end (less spacer). Place the assembly with the end angles down on a flat surface and torque the four fasteners to the specifications shown in the table below.

Flange Mounting Kits - Style J and H Single and Double Rod Cylinders (Fig. 3)
Place rectangular flange plate over appropriate end cap. Line up the four holes in the mounting plate with the four fastener holes in the cylinder end cap. Note that the rectangular mounting plate can be rotated to allow for different port locations. Secure the rectangular mounting plate to the end cap (finger tight) using the four fasteners. Then torque the four fasteners to the specifications shown in the table below.

Side End Lug Mounting Kits - Style G (Fig. 4)
Remove the bottom two fasteners holding the head to the cylinder body. Attach the two longer lugs with the fasteners provided in the kit to the cylinder head as shown. Attach the two shorter lugs to the cylinder cap in a similar fashion. Place the assembly with the lugs down on a flat surface and torque the four fasteners to the specifications shown in the table below.

Re-Assembly and Torquing of Cylinder After Maintenance

The following procedure is recommended to ensure the correct re-assembly of the cylinder.

A) Tighten the mounting fasteners in the opposite corner sequence to approximately 3/4 of final tightening torque.

B) Using a calibrated torque wrench, tighten the mounting fasteners to the final torque listed repeating the opposite corner sequence procedure.

Fig. 1 - Pivot Mounting Kit

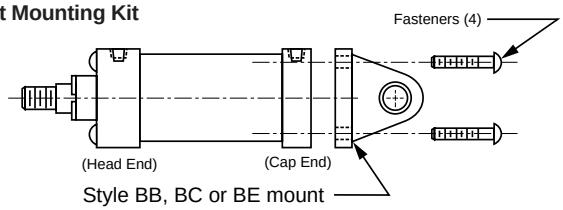

Fig. 2 - End Angle Mounting Kit

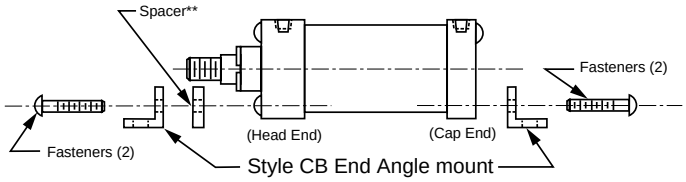

Fig. 3 - Flange Mounting Kit

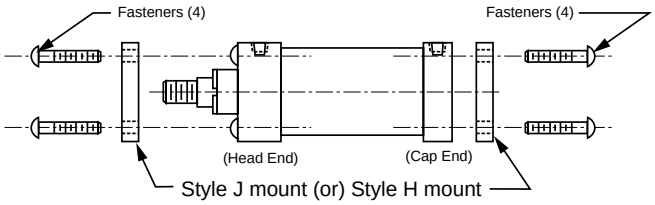

Fig. 4 - Side End Lug Mounting Kit - Style G

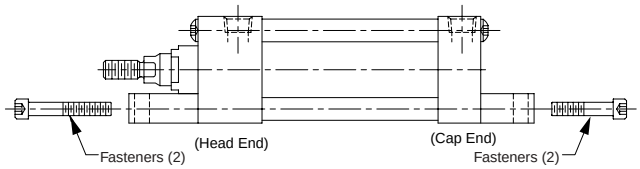

2MA Series Mounting Kits								Minimum Stroke	Fastener Torque	
Bore Size	J(MF1)	H(MF2)	BB(MP1)	BE(MP4)	CB(MS1)	BC(MP2)	G(MS7)			
	Head Rectangular Flange	Cap Rectangular Flange	Cap Clevis	Cap Pivot	Side End Angles	Cap Detachable Clevis	Side End Lug	For customer assembled mounting kits only!	in. lbs.	N - m
	Part No.	Part No.	Part No.	Part No.	Part No.	Part No.	Part No.			
1 1/4"	L074960125	L074960125	–	L074980125	L074990125	L075000125	L075020125	5/8"	32 + 4	3.6 + 0.5
1 1/2"	L074960150	L074960150	L074970150	L074980150	L074990150	L075000150	L075020150	1"	32 + 4	3.6 + 0.5
2"	L074960200	L074960200	L074970200	L074980200	L074990200	L075000200	L075020200	1"	72 + 10	8 + 1
2 1/2"	L074960250	L074960250	L074970250	L074980250	L074990250	L075000250	L075020250	7/8"	72 + 10	8 + 1
3 1/4"	L074960325	L074960325	L074970325	L074980325	L074990325	L075000325	L075020325	1 3/8"	216 + 12	24 + 1.3
4"	L074960400	L074960400	L074970400	L074980400	L074990400	L075000400	L075020400	1 3/8"	216 + 12	24 + 1.3

* Mounting kits on cylinders with stroke lengths shorter than those listed in the table above must be assembled by the factory to ensure proper fastener thread engagement.

** Spacer plate not used for 4" bore or double rod cylinders.

Parker Hannifin Corporation
Actuator Division
Wadsworth, Ohio USA

Gland Seal Kits

(Gland Cartridges & Rod Seals) For 2MA Series Air Cylinders

Pneumatic Service Temperatures:
Nitrile Seals: –10°F. (–23°C.) to +165°F. (+74°C.)
Fluorocarbon Seals: –10°F. (–23°C.) to +250°F. (+121°C.)

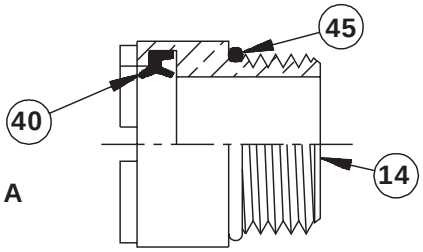

Figure A

Service kits of expendable parts for fluid power cylinders are stocked in principal industrial locations across the U.S.A. and other countries. For prompt delivery and complete information, contact your nearest Parker distributor or office.

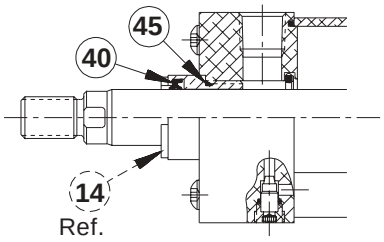

Figure B

ROD SEAL KIT
RK Kit contains 1 each of the following:
symbol #**40**, Rod Lipseal / Wiper.
symbol #**45**, O-Ring, gland to head.

GLAND CARTRIDGE KIT
RG Kit contains 1 each of the following:
symbol #**14**, Gland, threaded cartridge type.
symbol #**40**, Rod Lipseal / Wiper.
symbol #**45**, O-Ring, gland to head.

Servicing the Rod Gland

(Cylinder disassembly is not required)

Fluid leakage around the piston rod (at the gland area) normally indicates a need to replace the gland seals.

The Parker 2MA Series Gland is a unique cartridge design. It is threaded into the cylinder head, and all sizes are removable without disturbing the end cap fasteners.

To Remove the Gland Cartridge

A) Inspect the piston rod to be sure it is free of burrs (or other foreign material) that would prevent sliding the cartridge off the rod.
B) Disconnect any attachments to the piston rod end thread.
C) Lubricate the rod with Lube-A-Cyl.
D) Unscrew the gland cartridge from the head using the appropriate gland and spanner wrench listed below.
E) Slide the cartridge off over the piston rod.
F) Make sure the gland to head O-Ring (symbol #45) is also removed from the assembly.
G) Remove all seals from the gland, inspect the gland (symbol #14) for wear & replace if necessary.

Installation

1) Reinspect the surface of the piston rod for scratches, dents and other surface damage, and make the necessary repairs.
2) Clean and lubricate the surface of the piston rod with Lube-A-Cyl.
3) If replacing complete gland cartridge, proceed to step #6. If gland (symbol #14) is not worn, replace seals only using appropriate rod seal kit (RK) and proceed as follows.
4) Lubricate gland seal groove, new Lipseal / Wiper (symbol #40) and install in gland groove. The seal should be installed orien tated as shown in Figure A above.
5) Install new gland to head o-ring (symbol #45) in position on gland as pictured above. Be careful not to cut the O-Ring.
6) Lubricate all seals (including symbol #45) and inside bearing surfaces of gland with Lube-A-Cyl or clean light oil.
7) Slide the gland cartridge onto the piston rod, squaring it with the threads in the head, and tightening (clockwise) until seated firmly against the head.
8) Torque the gland cartridge to the specifications shown below. **NOTE: Make sure the gland is sufficiently tight. Failure to do so may result in loosening during operation.**

Bore Size	Rod Dia.	Rod No.	RG Rod Gland Cartridge Kit (Consisting of: 1 ea. symbol #14, 40, & 45)		RK Rod Seal Kit (Consisting of: 1 ea. symbol # 40, & 45)		Gland Wrench	Spanner Wrench	Gland to Head Torque Units	
			NITRILE Seals	Fluorocarbon Seals	NITRILE Seals	Fluorocarbon Seals			U.S.A.	Metric
			Part No.	Part No.	Part No.	Part No.	Part No.	Part No.	Ft. Lbs.	Nm
1 1/4"	1/2"	1	RG02MA0051	RG02MA0055	RK02MA0051	RK02MA0055	0695900000	0116760000	35 - 40	47 - 54
1 1/2"	5/8"	1	RG02MA0061	RG02MA0065	RK02MA0061	RK02MA0065	0695900000	0116760000	40 - 45	54 - 61
2"	5/8"	1	RG02MA0061	RG02MA0065	RK02MA0061	RK02MA0065	0695900000	0116760000	40 - 45	54 - 61
	1"	3	RG02MA0101	RG02MA0105	RK02MA0101	RK02MA0105	0695910000	0116760000	45 - 50	61 - 68
2 1/2"	5/8"	1	RG02MA0061	RG02MA0065	RK02MA0061	RK02MA0065	0695900000	0116760000	40 - 45	54 - 61
	1"	3	RG02MA0101	RG02MA0105	RK02MA0101	RK02MA0105	0695910000	0116760000	45 - 50	61 - 68
3 1/4"	1"	1	RG02MA0101	RG02MA0105	RK02MA0101	RK02MA0105	0695910000	0116760000	45 - 50	61 - 68
	1 3/8"	3	RG02MA0131	RG02MA0135	RK02MA0131	RK02MA0135	0695920000	0117030000	75 - 80	102 - 108
4"	1"	1	RG02MA0101	RG02MA0105	RK02MA0101	RK02MA0105	0695910000	0116760000	45 - 50	61 - 68
	1 3/8"	3	RG02MA0131	RG02MA0135	RK02MA0131	RK02MA0135	0695920000	0117030000	75 - 80	102 - 108
5"	1"	1	RG02MA0101	RG02MA0105	RK02MA0101	RK02MA0105	0695910000	0116760000	45 - 50	61 - 68
	1 3/8"	3	RG02MA0131	RG02MA0135	RK02MA0131	RK02MA0135	0695920000	0117030000	75 - 80	102 - 108
6"	1 3/8"	1	RG02MA0131	RG02MA0135	RK02MA0131	RK02MA0135	0695920000	0117030000	75 - 80	102 - 108
	1 3/4"	3	RG02MA0171	RG02MA0175	RK02MA0171	RK02MA0175	0695930000	0116770000	90 - 95	122 - 129
8"	1 3/8"	1	RG02MA0131	RG02MA0135	RK02MA0131	RK02MA0135	0695920000	0117030000	75 - 80	102 - 108
	1 3/4"	3	RG02MA0171	RG02MA0175	RK02MA0171	RK02MA0175	0695930000	0116770000	90 - 95	122 - 129

Parker Hannifin Corporation
Actuator Division
Wadsworth, Ohio USA

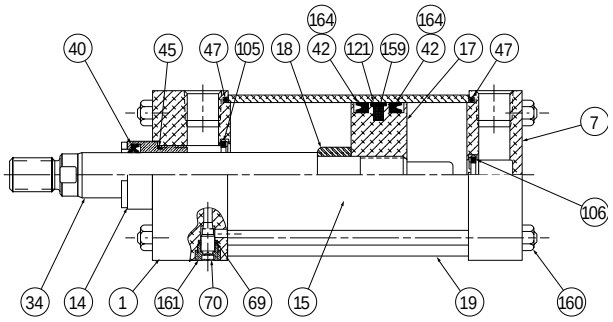

1¼" to 4" Bore Sizes

Symbol Number	Description
1	Head
7	Cap
14	Gland
15	Cylinder Body
17	Piston
18	Cushion Sleeve
19	Tie Rod
23	Tie Rod Nut
34	Piston Rod
40	Rod Wiper – Seal
42	Lip Seal – Piston

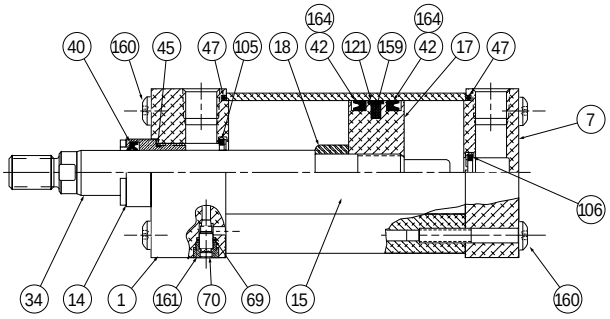

5" to 8" Bore Sizes

Symbol Number	Description
45	O-Ring – Head to Gland
47	O-Ring – End Seal
69*	O-Ring – Needle Valve
70*	Needle Valve
105*	Cushion Check Seal – Head
106*	Cushion Check Seal – Cap
121	Wear Strip
159	Magnetic Ring
160	Fastener – Tie Bolt
161*	Needle Valve – Retainer
164	Bumperseal – Piston

Bore Size	PK		BK	SYMBOL #159	CB		Fastener Bolt/ Tie Rod Torque Units	
	Piston Seal Kit Lipseal Type 2 ea. of Symbol #42		Piston Seal Kit Bumper Seal Type 2 ea. of Symbol #164	Magnetic Ring (if Required)	Cylinder Body End Seal Kit			
	NOTE: Order Magnetic Ring symbol #159 separately if required.				Consisting of: 2 each symbol #47			
	NITRILE Seals	Fluorocarbon Seals	(NITRILE ONLY)	(NITRILE ONLY)	NITRILE Seals	Fluorocarbon Seals		
	Part No.	Part No.	Part No.	Part No.	Part No.	Part No.	U.S.A.	Metric
1¼"	PK1252MA01	PK1252MA05	N/A	1475790032	CB1252MA01	CB1252MA05	32 + 4 inch lbs.	3.6 +0.5 nm
1½"	PK1502MA01	PK1502MA05	BK01502MA1	0865130151	CB1502MA01	CB1502MA05	32 + 4 inch lbs.	3.6 +0.5 nm
2"	PK2002MA01	PK2002MA05	BK02002MA1	0865130200	CB2002MA01	CB2002MA05	72 + 10 inch lbs.	8 +1 nm
2½"	PK2502MA01	PK2502MA05	BK02502MA1	0865130250	CB2502MA01	CB2502MA05	72 + 10 inch lbs.	8 +1 nm
3¼"	PK3202MA01	PK3202MA05	BK03252MA1	0865130325	CB3202MA01	CB3202MA05	216 + 12 inch lbs.	24 +1.3 nm
4"	PK4002MA01	PK4002MA05	BK04002MA1	0865130400	CB4002MA01	CB4002MA05	216 + 12 inch lbs.	24 +1.3 nm
5"	PK5002MA01	PK5002MA05	N/A	0865130500	CB5002MA01	CB5002MA05	30 + 1 ft. lbs.	41 +1 nm
6"	PK6002MA01	PK6002MA05	N/A	0865130600	CB6002MA01	CB6002MA05	35 + 1 ft. lbs.	48 +1 nm
8"	PK8002MA01	PK8002MA05	N/A	0865130800	CB8002MA01	CB8002MA05	80 + 1 ft. lbs.	109 +6 nm

Bore Size	Rod Dia.	Rod No.	(CH) Head (Rod End) Cushion Kit Consisting of: 1 ea. sym. #69, 70, 105 & 161		(CC) Cap End Cushion Kit Consisting of: 1 ea. sym. #69, 70, 106 & 161	
			Class 1 Nitrile Seals	Class 5 Fluorocarbon Seals	Class 1 Nitrile Seals	Class 5 Fluorocarbon Seals
1¼"	½"	1	CH12102MA1	CH12102MA5	CC12502MA1	CC12502MA5
1½"	⅝"	1	CH15102MA1	CH15102MA5	CC15002MA1	CC15002MA5
2"	⅝"	1	CH20102MA1	CH20102MA5	CC20002MA1	CC20002MA5
	1"	3	CH20302MA1	CH20302MA5		
2½"	⅝"	1	CH25102MA1	CH25102MA5	CC25002MA1	CC25002MA5
	1"	3	CH25302MA1	CH25302MA5		
3¼"	1"	1	CH32102MA1	CH32102MA5	CC32002MA1	CC32002MA5
	1⅜"	3	CH32302MA1	CH32302MA5		
4"	1"	1	CH40102MA1	CH40102MA5	CC40002MA1	CC40002MA5
	1⅜"	3	CH40302MA1	CH40302MA5		
5"	1"	1	CH50102MA1	CH50102MA5	CC50002MA1	CC50002MA5
	1⅜"	3	CH50302MA1	CH50302MA5		
6"	1⅜"	1	CH60102MA1	CH60102MA5	CC60002MA1	CC60002MA5
	1¾"	3	CH60302MA1	CH60302MA5		
8"	1⅜"	1	CH80102MA1	CH80102MA5	CC80002MA1	CC80002MA5
	1¾"	3	CH80302MA1	CH80302MA5		

Parker Hannifin Corporation
Actuator Division
Wadsworth, Ohio USA

Piston Seal Kits

(Piston & Cylinder Body Seals) For 2MA Series Air Cylinders

Service kits of expendable parts for fluid power cylinders are stocked in principal industrial locations across the U.S.A. and other countries. For prompt delivery and complete information, contact your nearest Parker distributor or office.

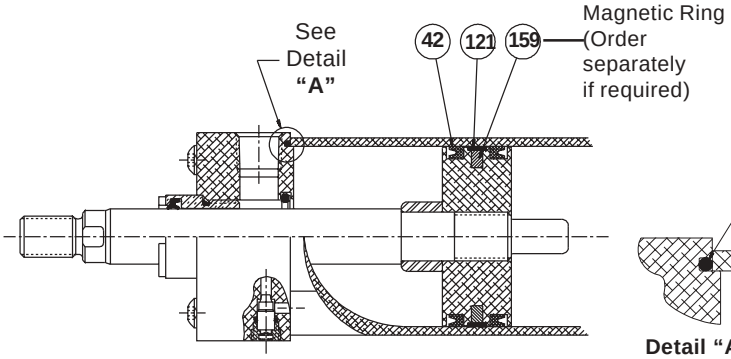

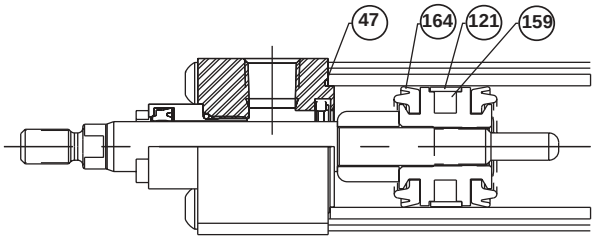

PISTON SEAL KIT
(PK) Kit contains 2 each of the following:
symbol #**42**, Lipseal, piston.
symbol #**47**, O-Ring, cylinder body to head & cap,
1 each - symbol #**121**, Wear Strip - For all sizes - except - 1 1/2" bore Piston Seal Kit contains :
1 each - Flat Wear Strip (5/16" wide) for 1 1/2" bore size cylinders manufactured prior to Feb.1994.
and 1 each - Molded Wear Strip (3/8" wide) for current 1 1/2" bore cylinder piston design.
(See "Servicing the Piston Seals" on opposite side)

CYLINDER BODY END SEAL KIT (CB) Kit contains 2 each of the following: symbol #**47**, O-Ring, cylinder body to head & cap.

PISTON SEAL KIT (with bumper)
(BK) Kit contains:
2 each - symbol **#164**, Bumper Seal, piston.
2 each - symbol **#47**, O-Ring, cylinder body
1 each - symbol **#121**, Wear Strip

Service kits of expendable parts for fluid power cylinders are available for either Class 1, or Class 5 fluid service.

Standard Seals - Class 1 Service are standard, and contain Nitrile seals for standard fluid service. These seals are suitable for use when air is the operating medium.

The recommended operating temperature range for Class 1 seals is: –10° F. (–23° C.) to +165° F. (+74° C.)

Fluorocarbon Seals - Class 5 Service kits contain Fluorocarbon seals and are especially suited for elevated temperature service.
The recommended temperature range for Class 5 seals in the series 2MA cylinder is: –10° F. (–23° C.) to +250° F. (+121° C).

Warning - The piston rod to piston threaded connections are secured with an anaerobic adhesive which is temperature sensitive. Cylinders specified with Fluorocarbon seals are assembled with an anaerobic adhesive having a maximum operating temperature rating of +250° F. (+121° C.). Cylinders specified with other seal compounds are assembled with an anaerobic adhesive having amaximum operating temperature of +165° F. (+74° C.). These temperature limitations are necessary to prevent the possible loosening of the threaded connections. Cylinders originally
manufactured with Class 1 seals that will be exposed to ambient temperatures above +165° F. (+74° C.) must be modified for higher temperature service. Contact the factory immediately and arrange for the piston to rod connection to be properly reassembled to withstand the higher temperature service.

Bore Size	PK		BK	SYMBOL # 159	CB		Fastener Bolt / Tie Rod Torque Units	
	Piston Seal Kit LipSeal Type 2 ea. of Symbol #42		Piston Seal Kit BumperSeal Type 2 ea. of Symbol #164	Magnetic Ring (If Required)	Cylinder Body End Seal Kit			
	NOTE: Order - Magnetic Ring symbol #159 - separately if required				Consisting of: 2 each symbol # 47			
	NITRILE Seals	Fluorocarbon Seals	(NITRILE ONLY)	(NITRILE ONLY)	NITRILE Seals	Fluorocarbon Seals		
	Part No.	Part No.	Part No.	Part No.	Part No.	Part No.	U.S.A.	Metric
1 1/4"	PK1252MA01	PK1252MA05	N/A	1475790032	CB1252MA01	CB1252MA05	32 + 4 in. lbs.	3.6 + 0.5 nm
1 1/2"	PK1502MA01	PK1502MA05	BK01502MA1	0865130151 **	CB1502MA01	CB1502MA05	32 + 4 in. lbs.	3.6 + 0.5 nm
2"	PK2002MA01	PK2002MA05	BK02002MA1	0865130200	CB2002MA01	CB2002MA05	72 + 10 in. lbs.	8 + 1 nm
2 1/2"	PK2502MA01	PK2502MA05	BK02502MA1	0865130250	CB2502MA01	CB2502MA05	72 + 10 in. lbs.	8 + 1 nm
3 1/4"	PK3202MA01	PK3202MA05	BK03252MA1	0865130325	CB3202MA01	CB3202MA05	216 + 12 in. lbs.	24 + 1.3 nm
4"	PK4002MA01	PK4002MA05	BK04002MA1	0865130400	CB4002MA01	CB4002MA05	216 + 12 in. lbs.	24 + 1.3 nm
5"	PK5002MA01	PK5002MA05	N/A	0865130500	CB5002MA01	CB5002MA05	30 + 1 ft. lbs.	41 + 1 nm
6"	PK6002MA01	PK6002MA05	N/A	0865130600	CB6002MA01	CB6002MA05	35 + 1 ft. lbs.	48 + 1 nm
8"	PK8002MA01	PK8002MA05	N/A	0865130800	CB8002MA01	CB8002MA05	80 + 1 ft. lbs.	109 + 6 nm

** Use old style magnet part number 0865130150 for 1 1/2" bore cylinders manufactured prior to Feb. 1994.

Parker Hannifin Corporation
Actuator Division
Wadsworth, Ohio USA

Parker Lube-A-Cyl...

Is recommended for use in air cylinders during normal operation, and particularly when servicing and reassembling cylinders. It is a multi-purpose lubricant in grease form that provides lubrication without deteriorating effects on synthetic seals. It produces a thin film which will not blow out with exhaust air. It provides piston, rod and seal lubrication, and has excellent resistance to water and mechanical breakdown with temperature range of –10° F (–23° C) to +350° F (+177° C). Lube-A-Cyl is packaged in 1.5 oz. tubes, a sufficient quantity for average size air cylinder. One application should last for a period of 6 to 18 months depending upon service. Order by part number 0761630000.

Servicing the Piston Seals

Disassemble the cylinder completely, remove the old seals and clean all the parts. The cylinder bore and piston should then be examined for evidence of scoring. (The light scratch marks usually present on both cylinder bore and piston will generally have no detrimental effects on the performance of the cylinder.)

Apply Parker “Lube-A-Cyl” to O.D. of piston and all grooves. Install one piston Lipseal (sym. # 42) in the groove nearest the rod. The two “lips” of this seal should face toward the rod end of the piston. If required, install the magnetic ring (sym. # 159) in the bottom of the middle groove. (See detail “1” below) Next, install the wear strip (sym. # 121) in the top of the middle groove - (See detail “2” below). **NOTE:** Due to a piston design change, the 1 1/2" bore cylinder Piston Seal Kit contains two piston bearings (sym. # 121). The old style 1 1/2" bore piston bearing (cylinders furnished prior to Feb. 1994) is a 5/16" wide flat wear strip and the new style wear strip is a 3/8" wide molded bearing. To determine which wear strip is correct for the 1 1/2" bore cylinder being serviced, it will be necessary to check the width of the bearing groove on the piston O.D.

Coat the inside of the cylinder body with Parker “Lube-A-Cyl” and insert the piston - cap end first - into the cylinder body as shown in detail “3” below.

Next, turn the cylinder body on its side and push the piston and rod assembly through the barrel just far enough to expose the groove for the second Lipseal. (See detail “4” below.) Be careful not to move the piston too far so as to expose the wear strip (sym. # 121). If the piston should move too far, push the piston and rod assembly completely through the cylinder body and again start the piston from the original end. Now install the second Lipseal (sym. # 42)in the exposed groove with the two “lips” facing away from the rod and pull the piston into the cylinder body.

The piston and rod are securely locked together with anaerobic adhesive. This threaded connection should only be disassembled or reassembled by factory trained personnel.

NOTE: An extreme pressure lubricant (such as molybdlenum disulphate) should be used on the tie rod threads and bearing faces to reduce friction and tie rod twist.

Assemble both cap and head, complete with cylinder body O-Rings (sym. # 47), to each end of the cylinder body. Install end cap fasteners and tighten to appropriate torque, using opposite corner to corner torquing sequence. (See table on side 1). After screws are torqued, firmly torque the rod gland against the head using a gland and spanner wrench. (See Service Bulletin # 0995-M11)

In case of a “DD” - center trunnion - mounted cylinder, care must be taken to prevent binding the cylinder body when repositioning the trunnion collar. The proper method of assembling this type of cylinder is as follows:

After all the piston seals have been installed on the piston and the piston is in the cylinder body, fit the cap with its O-ring (sym. # 47) in position onto the cylinder body. Then "stud" into the trunnion collar the four tie rods that connect the cap to the trunnion collar. Hand tighten the four tie rod nuts at the cap. Distances from the inner face of the cap to the finished face of the trunnion collar should the be made equal at all four tie rods when all four tie rod nuts are in contact with the cap.

When the assembly is ready for final torquing, it may be necessary to adjust the tie rods at the cap when torquing the tie rods at the head in order to position the trunnion collar in its final position.

As a check, to be certain the trunnion mount will not interfere with cylinder operation, move the piston and rod assembly by hand to determine whether there is any tendency for the piston to bind at the spot where the trunnion collar is located. If any binding is noticeable, readjust the tie rods.

For 1 1/2" bore see text above

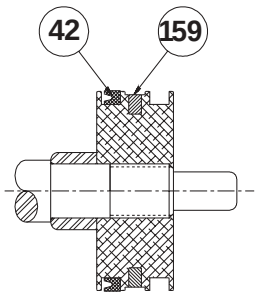

Detail “1”

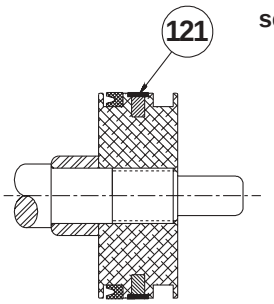

Detail “2”

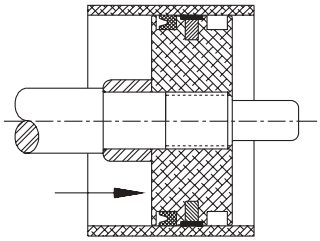

Detail “3”

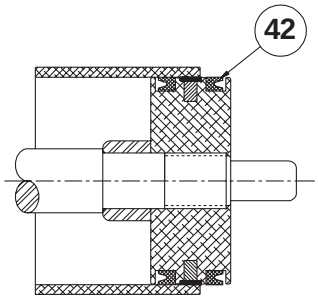

Detail “4”

NOTES

Parker Hannifin Corporation
Actuator Division
Wadsworth, Ohio USA

Gland Seal Kits

(Gland Cartridges & Rod Seals including TS-2000 Rod Seals) For 2ML Series Hydraulic Cylinders

Hydraulic Service Temperatures: –10° F. (–23° C.) to +165° F. (+74° C.)

Figure A

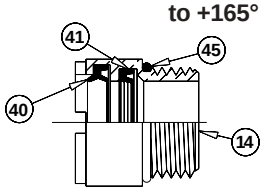

GLAND CARTRIDGE KIT

(RG) Kit contains 1 each of the following:

symbol #**14**, Gland, threaded cartridge type.
symbol #**40**, Rod Wiper.
symbol #**41**, Rod Lipseal.
symbol #**45**, O-Ring, gland to head.

Servicing the Rod Gland

(Cylinder disassembly is not required)

Fluid leakage around the piston rod at the gland area will normally indicate a need to replace the gland seals.

The Parker 2ML Series Gland is a unique cartridge design. It is threaded into the cylinder head and all sizes are removable without disturbing the end cap fasteners.

To Remove the Gland Cartridge

A) Inspect the piston rod to be sure it is free of burrs or other foreign material that would prevent sliding the cartridge off the rod.

B) Disconnect any attachments to the piston rod end thread.

C) Lubricate the rod with clean light oil.

D) Unscrew the gland cartridge from the head using appropriate gland and spanner wrench listed below.

E) Slide the cartridge off over the piston rod.

F) Make sure the gland to head O-Ring (symbol #45) is also removed from the assembly.

G) Remove all seals from the gland, inspect the gland (symbol #14) for wear & replace if necessary.

Service kits of expendable parts for fluid power cylinders are stocked in principal industrial locations across the U.S.A. and other countries. For prompt delivery and complete information, contact your nearest Parker distributor or office.

Figure B

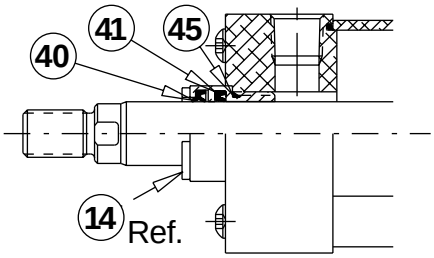

ROD SEAL KIT

(RK) Kit contains 1 each of the following:

symbol #**40**, Rod Wiper.
symbol #**41**, Rod Lipseal.
symbol #**45**, O-Ring, gland to head.

Installation

1) Reinspect the surface of the piston rod for scratches, dents and other surface damage and make the necessary repairs.

2) Clean and lubricate the O.D. of the piston rod with clean light oil.

3) If replacing complete gland cartridge proceed to step #6. If gland (symbol #14) is not worn, replace seals only using appropriate rod seal kit (RK) and proceed as follows.

4) Lubricate the Gland (sym. #14) I.D., new Wiper (sym. #40) & new Lipseal (sym. #41) and install in appropriate gland groove. The seals should be installed orientated as shown in Figure A above.

5) Install new gland to head o-ring (symbol #45) in position on gland as pictured above. Be careful not to cut the O-Ring.

6) Lubricate all seals (including symbol #45) and inside bearing surfaces of gland with clean light oil.

7) Slide the gland cartridge onto the piston rod, squaring it with the threads in the head, and tightening (clockwise) until seated firmly against the head.

8) Torque the gland cartridge to the specifications shown below.
NOTE: Make sure the gland is sufficiently tight. Failure to do so may result in loosening during operation.

Bore Size	Rod Dia.	Rod No.	RG-Rod Gland Cartridge Kit Buna-N (Nitrile) & Polyurethane Consisting of: 1 ea. sym. # 14, 40, 41 & 45 Part No.	RK-Rod Seal Kit Buna-N (Nitrile) & Polyurethane Consisting of: 1 ea. sym. # 40, 41 & 45 Part No.	Gland Wrench Part No.	Spanner Wrench Part No.	Gland To Head Torque Units U.S.A. Ft. Lbs.	Gland To Head Torque Units Metric N.m
1-1/2"	5/8"	1	RG02ML0061	RK02ML0061	0695900000	0116760000	40-45	54-61
2"	5/8"	1	RG02ML0061	RK02ML0061	0695900000	0116760000	40-45	54-61
	1"	3	RG02ML0101	RK02ML0101	0695910000	0116760000	45-50	61-68
2-1/2"	5/8"	1	RG02ML0061	RK02ML0061	0695900000	0116760000	40-45	54-61
	1"	3	RG02ML0101	RK02ML0101	0695910000	0116760000	45-50	61-68
3-1/4"	1"	1	RG02ML0101	RK02ML0101	0695910000	0116760000	45-50	61-68
	1-3/8"	3	RG02ML0131	RK02ML0131	0695920000	0117030000	75-80	102-108
4"	1"	1	RG02ML0101	RK02ML0101	0695910000	0116760000	45-50	61-68
	1-3/8"	3	RG02ML0131	RK02ML0131	0695920000	0117030000	75-80	102-108
5"	1"	1	RG02ML0101	RK02ML0101	0695910000	0116760000	45-50	61-68
	1-3/8"	3	RG02ML0131	RK02ML0131	0695920000	0117030000	75-80	102-108
6"	1-3/8"	1	RG02ML0131	RK02ML0131	0695920000	0117030000	75-80	102-108
	1-3/4"	3	RG02ML0171	RK02ML0171	0695930000	0116770000	90-95	122-129
8"	1-3/8"	1	RG02ML0131	RK02ML0131	0695920000	0117030000	75-80	102-108
	1-3/4"	3	RG02ML0171	RK02ML0171	0695930000	0116770000	90-95	122-129

Parker Hannifin Corporation
Actuator Division
Wadsworth, Ohio USA

Piston Seal Kits

(Piston & Cylinder Body Seals)
For 2ML Series Hydraulic Cylinders

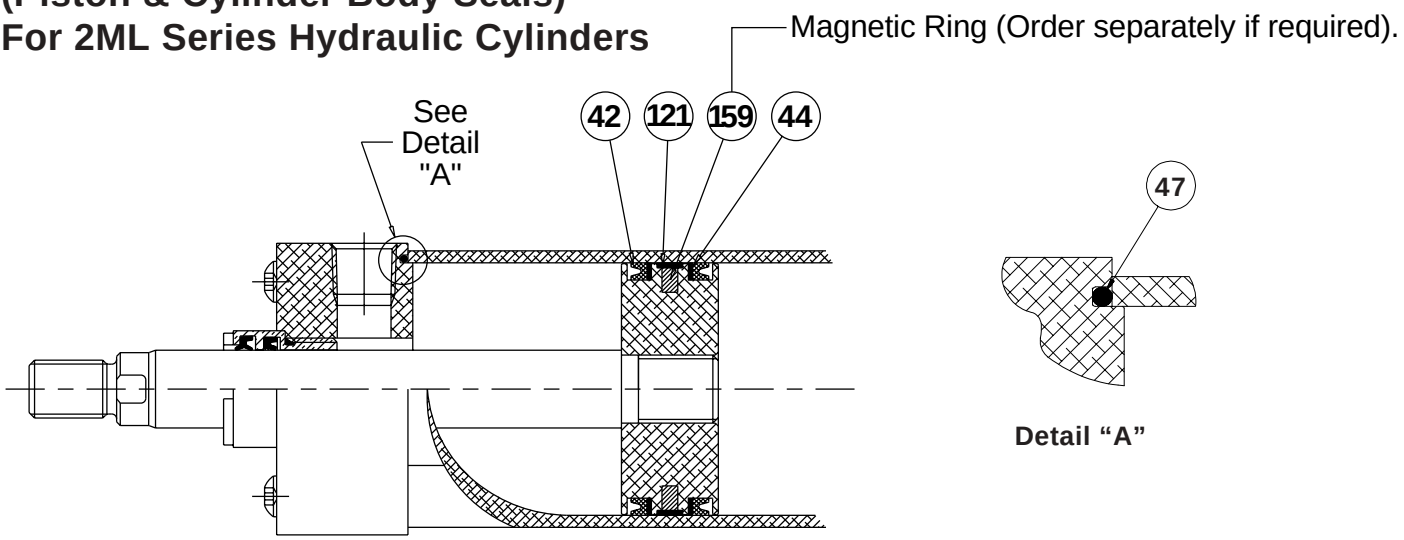

PISTON SEAL KIT
(PK) Kit contains 2 each of the following:
symbol #**42**, Lipseal, piston.
symbol #**44**, Back-Up Washer.
symbol #**47**, O-Ring, cylinder body to head & cap,
1 each - symbol #**121**, Wear Strip
(See "Servicing the Piston Seals" on opposite side)

CYLINDER BODY END SEAL KIT
(CB) Kit contains 2 each of the following:
symbol #**47**, O-Ring, cylinder body to head & cap.

Service kits of expendable parts for fluid power cylinders are stocked in principal industrial locations across the U.S.A. and other countries. For prompt delivery and complete information, contact your nearest Parker distributor or office.

Standard Seals - Class 1 Service are standard, and contain Nitrile seals for standard fluid service. These seals are suitable for use when air is the operating medium.

The recommended operating temperature range for Class 1 seals is: –10° F. (–23° C.) to +165° F. (+74° C.)

Warning - The piston rod to piston threaded connections are secured with an anaerobic adhesive which is temperature sensitive. Cylinders specified with Standard Class 1 seal compounds are assembled with an anaerobic adhesive having a maximum operating temperature of +165° F. (+74° C.). These temperature limitations are necessary to prevent the possible loosening of the threaded connections. Cylinders originally manufactured with Class 1 seals that will be exposed to ambient temperatures above +165° F. (+74° C.) must be modified for higher temperature service. Contact the factory immediately and arrange for the piston to rod connection to be properly reassembled to withstand the higher temperature service.

Bore Size	PK Piston Seal Kit NOTE: Order - Magnetic Ring symbol #159 - separately if required	SYMBOL # 159 Magnetic Ring (If Required)	CB Cylinder Body End Seal Kit Consisting of: 2 each symbol # 47	Fastener Bolt / Tie Rod Torque Units	
	NITRILE Seals	(NITRILE ONLY)	NITRILE Seals		
	Part No.	Part No.	Part No.	U.S.A.	Metric
1 1/2"	PK1502ML01	0865130151	CB1502MA01	32 + 4 in. lbs.	3.6 + 0.5 nm
2"	PK2002ML01	0865130200	CB2002MA01	72 + 10 in. lbs.	8 + 1 nm
2 1/2"	PK2502ML01	0865130250	CB2502MA01	72 + 10 in. lbs.	8 + 1 nm
3 1/4"	PK3202ML01	0865130325	CB3202MA01	216 + 12 in. lbs.	24 + 1.3 nm
4"	PK4002ML01	0865130400	CB4002MA01	216 + 12 in. lbs.	24 + 1.3 nm
5"	PK5002ML01	0865130500	CB5002MA01	30 + 1 ft. lbs.	41 + 1 nm
6"	PK6002ML01	0865130600	CB6002MA01	35 + 1 ft. lbs.	48 + 1 nm
8"	PK8002ML01	0865130800	CB8002MA01	80 + 1 ft. lbs.	109 + 6 nm

Parker Hannifin Corporation
Actuator Division
Wadsworth, Ohio USA

Servicing the Piston Seals

Disassemble the cylinder completely, remove the old seals and clean all the parts. The cylinder bore and piston should then be examined for evidence of scoring. (The light scratch marks usually present on both cylinder bore and piston will generally have no detrimental effects on the performance of the cylinder.)

Apply clean light oil to O.D. of piston and all grooves. Install one piston Lipseal (sym. # 42) & one Back-Up Washer (sym. #44) in the groove nearest the rod. The two “lips” of the Lipseal (sym. #42) should face toward the rod end of the piston and the Back-Up Washer (sym. #44) should be installed in the same piston groove as shown. If required, install the magnetic ring (sym. # 159) in the bottom of the middle groove. (See detail “1” below) Next, install the wear strip (sym. # 121) in the top of the middle groove - (See detail “2” below).

Coat the inside of the cylinder body with clean light oil and insert the piston - cap end first - into the cylinder body as shown in detail “3” below.

Next, turn the cylinder body on its side and push the piston and rod assembly through the barrel just far enough to expose the piston groove for the second Lipseal. (See detail “4” below.) Be careful not to move the piston too far so as to expose the wear strip (sym. # 121). If the piston should move too far, push the piston and rod assembly completely through the cylinder body and again start the piston from the original end. Now install the second Lipseal (sym. # 42) & Back-Up Washer (sym. #44) in the exposed groove with the two “lips” of the Lipseal (sym. #42) facing away from the rod and the Back-Up Washer (sym. #44) positioned as shown. Then pull the piston into the cylinder body.

The piston and rod are securely locked together with anaerobic adhesive. This threaded connection should only be disassembled or reassembled by factory trained personnel.

NOTE: An extreme pressure lubricant (such as molybdlenum disulphate) should be used on the tie rod threads and bearing faces to reduce friction and tie rod twist.

Assemble both cap and head, complete with cylinder body O-Rings (sym. # 47), to each end of the cylinder body. Install end cap fasteners and tighten to appropriate torque, using opposite corner to corner torquing sequence. (See table on side 1). After screws are torqued, firmly torque the rod gland against the head using a gland and spanner wrench. (See Service Bulletin # 0995-M13)

In case of a “DD” - center trunnion - mounted cylinder, care must be taken to prevent binding the cylinder body when repositioning the trunnion collar. The proper method of assembling this type of cylinder is as follows:

After all the piston seals have been installed on the piston and the piston is in the cylinder body, fit the cap with its O-ring (sym. # 47) in position onto the cylinder body. Then "stud" into the trunnion collar the four tie rods that connect the cap to the trunnion collar. Hand tighten the four tie rod nuts at the cap. Distances from the inner face of the cap to the finished face of the trunnion collar should the be made equal at all four tie rods when all four tie rod nuts are in contact with the cap.

When the assembly is ready for final torquing, it may be necessary to adjust the tie rods at the cap when torquing the tie rods at the head in order to position the trunnion collar in its final position.

As a check, to be certain the trunnion mount will not interfere with cylinder operation, move the piston and rod assembly by hand to determine whether there is any tendency for the piston to bind at the spot where the trunnion collar is located. If any binding is noticeable, readjust the tie rods.

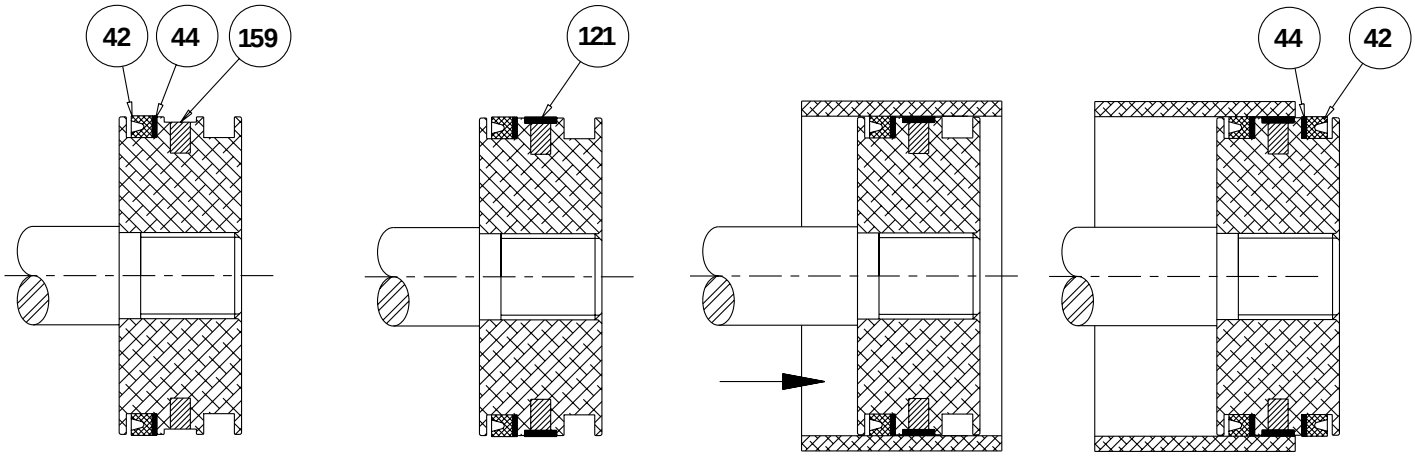

Detail “1” **Detail “2”** **Detail “3”** **Detail “4”**

Parker Hannifin Corporation
Actuator Division
Wadsworth, Ohio USA