2007-12-10

5011670200-DM00

ELC-CODNETM

DeviceNet Network Scanner

Instruction Sheet

⚠ WARNING

- This Instruction Sheet only provides descriptions for electrical specifications, general specifications, installation and wiring.
- ELC-CODNETM is an OPEN-TYPE device and therefore should be installed in an enclosure free of airborne dust, humidity, electric shock and vibration. The enclosure should prevent non-maintenance staff from operating the device (e.g. key or specific tools are required for opening the enclosure) in case any danger or damage happens. DO NOT touch any terminal when the power is switched on.

1 INTRODUCTION

1.1 Model Explanation and Peripherals

Thank you for choosing Eaton Logic Controller (ELC) series products.

Functions:

- ❖ Support Group 2 server device and Group 2 only server device.
- ❖ Support DeviceNet Master and Slave mode.
- ❖ Support explicit connection via Predefined Master/Slave Connection Set (explicit message).
- ❖ Support EDS file configure in ElinkConfigurator software.
- ❖ Support establishing all kinds of connections with Slave: polled, bit-strobed, change of state, cyclic
- ❖ Connection size is flexible from 1 to 380 bytes in the input and output area.

1.2 Product Profile and Outline

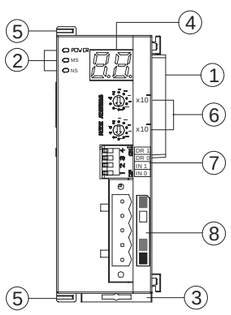

①	Extension port
②	Power, MS, NS LED
③	DIN rail clip
④	Message display
⑤	Extension clip
⑥	Address switch
⑦	Function switch
⑧	DeviceNet connection port

Product Profile: Unit mm [inchs]

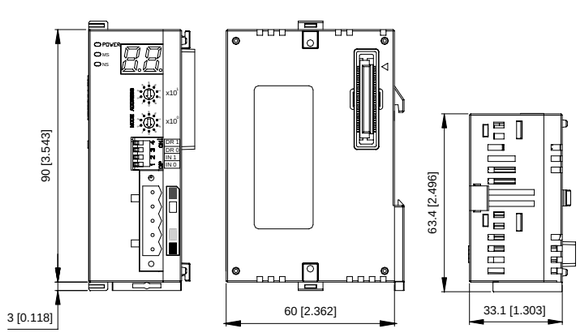

2 STANDARD SPECIFICATIONS

Function Specifications

DeviceNet Connection

Interface	Removable connector (5.08mm)
Transmission	CAN
Transmission cable	2-wire twisted shielded cable with 2-wire bus power cable and drain
Electrical isolation	500V DC

Communication

Message type	I/O polled, bit-strobe, change of state/cyclic
Baud rates	125 Kbps; 250 Kbps; 500 Kbps
Product code	64
Product type	12
Vendor ID	Eaton

Environmental Specifications

Noise immunity	ESD (IEC 61131-2, IEC 61000-4-2): 8KV Air Discharge EFT (IEC 61131-2, IEC 61000-4-4): Power Line: 2KV, Digital I/O: 1KV, Analog & communication I/O: 1KV Damped-Oscillatory Wave: Power Line: 1KV, Digital I/O: 1KV RS (IEC 61131-2, IEC 61000-4-3): 26MHz ~ 1GHz, 10V/m
Environment	Operation: 0ºC ~ 55ºC (temperature); 50 ~ 95% (humidity); pollution degree 2 Storage: -25 ºC ~ 70ºC (temperature); 5 ~ 95% (humidity)
Vibration/shock resistance	Standard: IEC61131-2、IEC 68-2-6 (TEST Fc)/IEC61131-2 & IEC 68-2-27 (TEST Ea)

Electrical Specifications

DeviceNet	Module power voltage: All other power derived from ELC controller power supply
	Network power input: 11 ~ 25V DC; Current: less than 50mA (25V DC)

3 INSTALLATION

3.1 Installing ELC-CODNETM With an ELC Controller

1. Adjust the extension clip on the left side of the controller.
2. Connect the extension port of the controller with ELC-CODNETM as the figure below.
3. Fasten the extension clip.

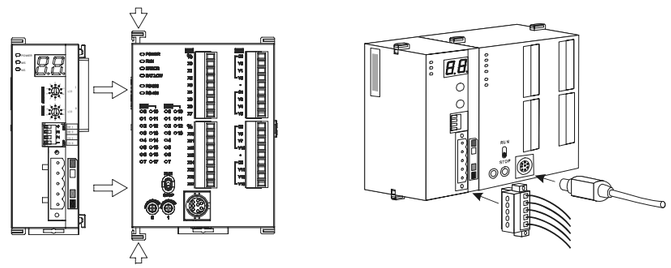

3.2 Pin Definition Of DeviceNet Connection Port

Pin	Signal	Color	Content
1	V-	Black	0 VDC
2	CAN_L	Blue	Signal-
3	Drain	-	Shield
4	CAN_H	White	Signal+
5	V+	Red	24 VDC

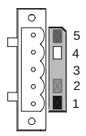

3.3 MAC ID Setting

Switch setting	Content
0…63	Valid DeviceNet MAC ID setting
Others	Invalid DeviceNet MAC ID setting

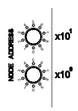

3.4 Function Switch Setting

DR1	DR0	Baud rate
OFF	OFF	125K bps
OFF	ON	250K bps
ON	OFF	500K bps
IN0	Hold the I/O data	
	ON	Hold the input and output buffer data when unit loss the DeviceNet communication
	OFF	Clear the input and output buffer data when unit loss the DeviceNet communication..
IN1	Reserved	

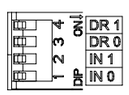

3.5 Connecting ELC-CODNETM Scanner With Slave Devices

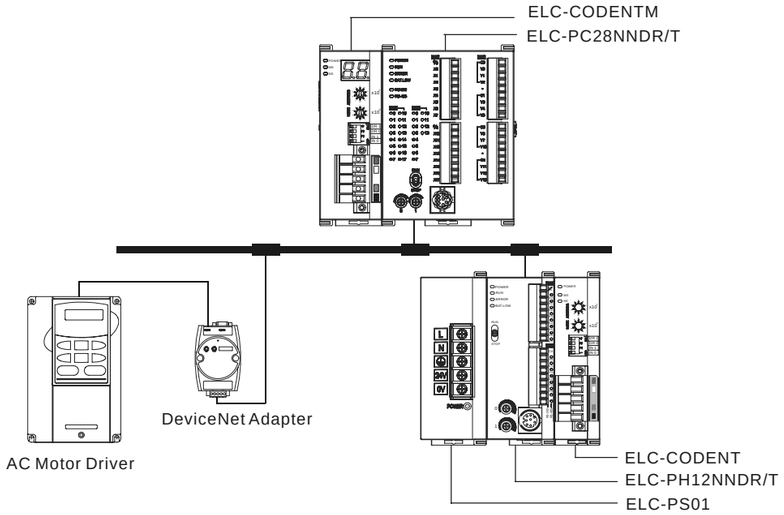

3.6 Cable Length and Baud Rates

The maximum cable length in a segment depends on the transmission speed. DeviceNet communicates at speeds from 125K bps to 500K bps over distances from 100 to 500 meters.

Baud rates (bps)	125K	250K	500K
Length (m)	500	250	100

4 CONFIGURATION

4.1 Access ELC-CODNETM Scanner With ELC

When ELC-CODNETM scanner is connected to the ELC, it will map a data area that maps to ELC-CODNETM scanner in the ELC.

Index of ELC-CODNETM scanner	Mapped D registers	
	Output image table	Input image table
1	D6250 ~ D6497	D6000 ~ D6247
2	D6750 ~ D6997	D6500 ~ D6747
3	D7250 ~ D7497	D7000 ~ D7247
4	D7750 ~ D7997	D7500 ~ D7747
5	D8250 ~ D8497	D8000 ~ D8247
6	D8750 ~ D8997	D8500 ~ D8747
7	D9250 ~ D9497	D9000 ~ D9247
8	D9750 ~ D9997	D9500 ~ D9747

The index of ELC-CODNETM scanner is relative to the processor. The 1st scanner just to the left of the ELC is index number 1. The next scanner to the left is number 2. The others are indexed as 3, 4 …and so on.

4.2 Input and Output Image Tables

The mapping of the scanner input and output image (the 1st scanner):

Output image			Input image		
D register	Image mapping	Length	D register	Image mapping	Length
D6250 ~ D6281	Explicit message program request	32 words	D6000 ~ D6031	Explicit message program response	32 words
D6282 ~ D6285	Bit-Strobed command	4 words	D6032~D6035	Scan list node status indication	4 words
D6286	Reserved	1 word	D6036	Scan module status indication	1 word
D6287 ~ D6476	DeviceNet output data	190 words	D6037 ~ D6226	DeviceNet input data	190 words
D6477 ~ D6497	Reserved for other function (do not use these devices in user program)	21 words	D6227 ~ D6247	Reserved for other function (do not use these devices in user program)	21 words

4.3 Using Explicit Message in Application Program

ELC-CODNETM scanner can use the ELC application program to send an explicit message request and receive explicit message response.

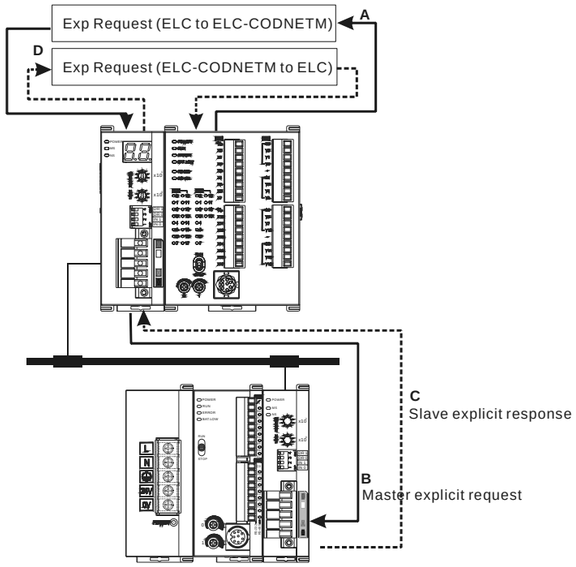

Step A: ELC transfers the explicit message data to ELC-CODNETM scanner.
Step B: ELC-CODNETM scanner sends the explicit request to target devices.
Step C: The target devices process the request and send the response to ELC-CODNETM scanner.
Step D: ELC receives the explicit response data.

4.4 Explicit Message Structure

The explicit message is controlled by the explicit message program request area and explicit message program response area. The two areas are mapped to D registers in ELC.

Output image			Input image		
D register	Image mapping	Length	D register	Image mapping	Length
D6250 ~ D6281	Explicit message program request	32 words	D6000 ~ D6031	Explicit message program response	32 words

The user can move the data of explicit request message to D6250 ~ D6281 and the ELC-CODNETM scanner will send the response data to D6000 ~ D6031. The explicit message request format is shown in the table below.

	D register	Output explicit request	
Message Header	D6250	ReqID	Command
	D6251	Port	Size
	D6252	Service code	MAC ID
Message Data	D6253	Class id	
	D6254	Instance id	
	D6256 ~ D6281	Service data (optional)	

- ReqID: When sending every explicit message, the user has to assign a Request ID for this explicit message. ELC-CODNETM scanner identifies the response message by this ID. Therefore, the user has to change the ID value when completing an explicit message communication for the next transmission.
- Command code: Fixed to 01 for every message transmission.
- Port: Reserved as 0 for every message transmission.
- Size: The size of message data (starting from D6253); Unit: byte.
- Service code: The service code of this explicit message.
- MAC ID: The node address of target devices.

The format of explicit message response:

	Words	Input explicit response	
Message Header	D6000	ReqID	Status
	D6001	Port	Size
	D6002	Service code	MAC ID
Message Data	D6003 ~ D6031	Service response data	

- Status code:

Status code	Description
0	No request transmission
1	Explicit message communication is successful
2	Explicit message communication is in progress
3	Error: No response from target device
4	Error: Command code is invalid
5	Error: The request data size is invalid
6	Error: The response data size is invalid
7	Error: No connection to target device
8-255	Reserved

5 BIT-STROBED COMMAND

5.1 Bit-strobe Principles

Bit-strobe is one of the standard I/O transmission method for DeviceNet. The length of the command is fixed as 8 bytes, i.e. 64 bits. Every bit corresponds to 1 slave.

Device in PLC	Corresponding node in the network					
	b15	b14	b13	… …	b1	b0
D6282	Node15	Node14	Node 13	… …	Node 1	Node 0
D6283	Node 31	Node 30	Node 29	… …	Node 17	Node 16
D6284	Node 47	Node 46	Node 45	… …	Node 33	Node 32
D6285	Node 63	Node 62	Node 61	… …	Node 49	Node 48

In the bit-strobe mode, the master does not send data to the nodes of the slave. However, when the corresponding bit is set as “0”, the node of the slave has to respond with I/O data to the master. When the corresponding bit is set as “1”, the node of the slave does not need to respond with I/O data to the master.

6 NETWORK NODE STATUS INDICATION

6.1 Scan List Node Status Indication

The scan module conducts real-time monitoring on the nodes in the scan list and maps the status of each node to a bit. The user can acquire the status of the node in the network by monitoring the contents in D6032 ~ D6035. See the table below for the devices in the PLC and their corresponding nodes in the network.

Device in PLC	Corresponding network node					
	b15	b14	b13	… …	b1	b0
D6032	Node 15	Node 14	Node 13	… …	Node 1	Node 0
D6033	Node 31	Node 30	Node 29	… …	Node 17	Node 16
D6034	Node 47	Node 46	Node 45	… …	Node 33	Node 32
D6035	Node 63	Node 62	Node 61	… …	Node 49	Node 48

When the node in the scan list is in normal (abnormal) status, its corresponding bit will be Off (On).

6.2 Scan Module Status Indication

The user can acquire the status of the scan module by monitoring D6036. When the scan module is working normally, D6036 = 0. When the scan module is being initialized, the high byte of D6036 = 1 and the low byte of D6036 = 0. When error occurs in the scan module, the high byte of D6036 = 2. See the low bytes of D6036 for error codes.

Device in PLC	Explanation															
	b15	b14	b13	b12	b11	b10	b9	b8	b7	b6	b5	b4	b3	b2	b1	b0
D6036	Status of the scan module (0：normal，1：initialize，2：error)								Error codes of the scan module							

7 TROUBLESHOOTING

7.1 NS LED

NS LED status	Indication	How to correct
OFF	No power or duplicate ID check has not completed	1. Make sure the scanner is powered. 2. Make sure 1 or more nodes are communicating in the network.
Flashing GREEN	No communication	No correction is needed, or refers to digit-indicator.
GREEN	Normal operation	No correction is needed.
Flashing RED	Error in communication	Refer to digit-indicator.
RED	Network error; cannot check duplicate ID; Bus-off (please refer to digit-indicator)	1. Make sure all the devices have their unique address. 2. Check the network for correcting media installation and baud rate.

7.2 MS LED

MS LED status	Indication	How to correct
OFF	No power	Make sure the scanner is powered.
Flashing GREEN	The master is not configured.	Configure the scan list and re-download to the scanner.
GREEN	Normal operation	No correction is needed.
Flashing RED	Some slaves encounter communication error.	Refer to digit-indicator and check the scanner setup.
RED	Internal fault in the scanner module (please refer to digit-indicator)	Check if the configuration is valid. If the internal error still exists, replace the scanner with a new one.

7.3 NS & MS LED

NS LED	MS LED	Indication	How to correct
OFF	OFF	No power	Make sure the scanner is powered.
OFF	GREEN	Duplicate ID check has not completed	Make sure at least 1 node or more are communicating in the network and the baud rate is the same as the setting in ELC-CODNETM.
RED	Flashing RED	No 24V DC power from DeviceNet network	Check if the network cable is correctly connected to ELC-CODNETM. Check the 24V DC network power.
RED	RED	Hardware error and no network power	Go to your manufacturer or distributor for problem-solving.
RED	GREEN	MAC ID detection failure or Bus-off	Change the MAC ID setting and re-power ELC-CODNETM.

7.4 Digit-Indicator LED

Code	Indication	How to correct
0-63	Node address of scanner, normal operation	None
F0	Duplicate MAC ID check failure	Change the address and re-power ELC-CODNETM scanner.
F1	No scan list is active in the module	No slave device in the scan list. Configure and download to the scanner.
F2	Low voltage is detected	Check if the power of the scanner and ELC is normal.
F3	Entering Test Mode	Switch IN1 from ON to OFF and re-power the scanner.
F4	Bus-off detected	Re-power the scanner.
F5	No network power	Make sure the cable is correctly connected and check if the network power is normal.
F6	Internal error; Flash or Ram check error	If the error still exists after a power cycle, replace the scanner.
F7	Internal error; GPIO check error	If the error still exists after a power cycle, replace the scanner.
F8	Error in factory manufacturing	If the error still exists after a power cycle, replace the scanner.
F9	Internal error; EEPROM access failure	If the error still exists after a power cycle, replace the scanner.
E0	Device key parameter does not match scan list table.	Make sure that the device parameter in scan list matches the desired key parameter, including vendor ID, product code, device type and version.
E1	Data size returned does not match scan list.	Re-configure scan list using correct data size.
E2	Slave device in scan list does not exist.	The desired slave device does not exist in the network. Add device to the network.
E3	Module fails to transmit a message	Make sure that the connection is valid and check if the baud rate is correct.
E4	Error detected in the sequence of the fragmented I/O messages from device.	Correct program in the slave device.
E5	Slave device returns error response when the scanner attempts to communicate with it.	Correct program in the slave device.
E6	Data size returned is bigger than expected.	Check slave device configuration and scan list configuration.
E7	Device is checking MAC ID.	None