Parker Series 2A Air Cylinder

When the job calls for reliable, heavy-duty performance, specify Series 2A. A 100,000 psi yield strength chrome-plated, case-hardened piston rod. A 125,000 psi yield strength rod-end stud with rolled threads. 100,000 psi yield strength tie rods. With construction like this, the Parker Series 2A is rated for air service to 250 psi. This is one heavy-duty air cylinder that's really heavy duty.

They're truly premium quality cylinders, factory prelubricated for millions of maintenance-free cycles. And to make sure every cylinder is premium quality, we subject each and every one – not just batch samples – to tough inspection and performance tests. See pages 18 and 19 for the inside story on all the features that make Series 2A the high performance, long lasting choice for all your heavy-duty air applications.

For additional information – call your local Parker Cylinder Distributor.

800.696-6165 www.comoso.com

Series 2A
Heavy Duty Air Cylinders

Standard Specifications

- Heavy Duty Service – ANSI/(NFPA) T3.6.7R2-1996 Specifications and Mounting Dimension Standards
- Standard Construction – Square Head – Tie Rod Design
- Nominal Pressure – Up to 250 PSI Air Service
- Standard Fluid – Filtered Air
- Standard Temperature – -10°F. to +165°F.
- Bore Sizes – 1" through 14" (Larger sizes available)

In line with our policy of continuing product improvement, specifications in this catalog are subject to change.

- Piston Rod Diameter – 1/2" through 5 1/2"
- Mounting Styles – 17 standard styles at various application ratings
- Strokes – Available in any practical stroke length
- Cushions – Optional at either end or both ends of stroke. "Float Check" at cap end.
- Rod Ends – Three Standard Choices – Specials to Order

*See section C, "Operating Fluids and Temperature Range" for higher temperature service.

Note: Series 2A Air Cylinders fully meet ANSI/(NFPA) T3.6.7R2-1996 Specifications and Mounting Dimension Standards for Square Head Industrial Fluid Power Cylinders. Parker Style TB, JB, HB, C, DB, and BB are available in 7" bore size, see page 32.

A

Available Mounting Styles

Tie Rods Extended Head End

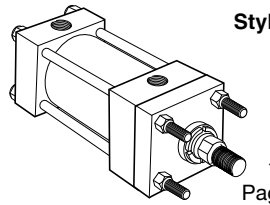

Style TB

1"-6", Page 20
(NFPA MX3) 8"-14", Page 34

Tie Rods Extended Cap End

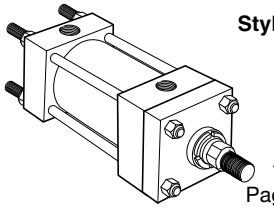

Style TC

1"-6", Page 20
(NFPA MX2) 8"-14", Page 34

Tie Rods Extended Both Ends

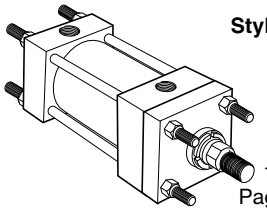

Style TD

1"-6", Page 20
(NFPA MX1) 8"-14", Page 34

Head Rectangular Flange

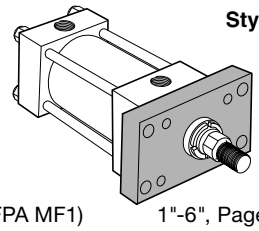

Style J

(NFPA MF1) 1"-6", Page 20

Head Square Flange

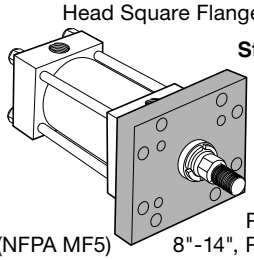

Style JB

1"-6", Page 22
(NFPA MF5) 8"-14", Page 34

Cap Rectangular Flange

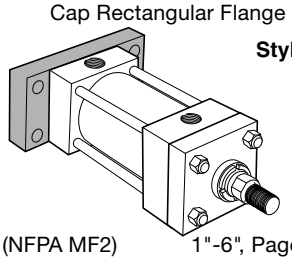

Style H

(NFPA MF2) 1"-6", Page 20

Cap Square Flange

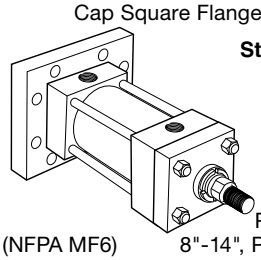

Style HB

1"-6", Page 22
(NFPA MF6) 8"-14", Page 34

Side Lug

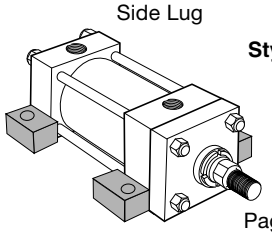

Style C

1"-6", Page 24
(NFPA MS2) 8"-14", Page 36

Centerline Lugs

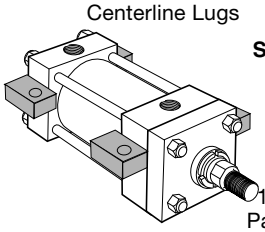

Style E

1 1/2"-6", Page 24
(NFPA MS3) 8"-14", Page 36

Side Tapped

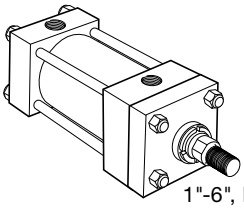

Style F

1"-6", Page 24
(NFPA MS4) 8"-14", Page 38

Side End Angles

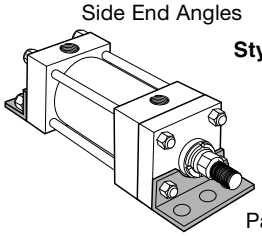

Style CB

1"-6", Page 26
(NFPA MS1) 8"-14", Page 40

Side End Lugs

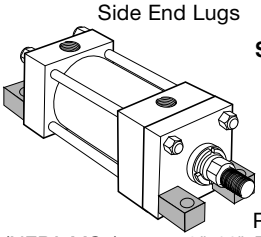

Style G

1"-6", Page 26
(NFPA MS7) 8"-14", Page 38

Cap Fixed Clevis

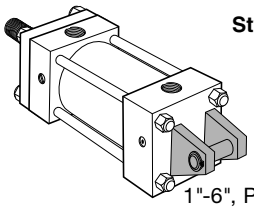

Style BB

1"-6", Page 30
(NFPA MP1) 8"-14", Page 40

Cap Detachable Clevis

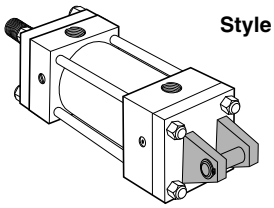

Style BC

(NFPA MP2) 1"-6", Page 30

Head Trunnion

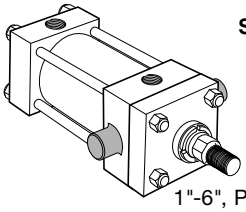

Style D

1"-6", Page 28
(NFPA MT1) 8"-14", Page 42

Cap Trunnion

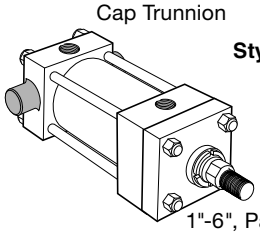

Style DB

1"-6", Page 28
(NFPA MT2) 8"-14", Page 42

Intermediate Fixed Trunnion

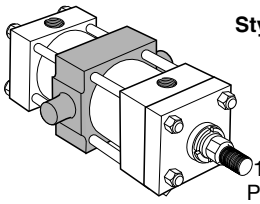

Style DD

1 1/2"-6", Page 28
(NFPA MT4) 8"-14", Page 42

Spherical Bearing

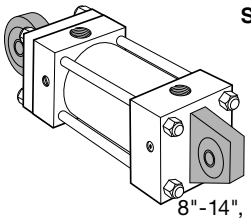

Style SB

1 1/2"-6", Page 44
8"-14", Page 45

Double Rod Cylinders

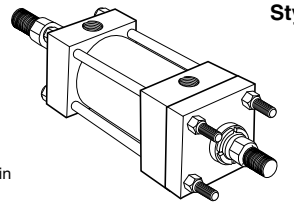

Style KTB Shown

Most of the above illustrated mounting styles are available in double rod cylinders. See Catalog Page 46.

For Cylinder Division Plant Locations – See Page II.

The inside story on why Series 2A is your best choice in heavy duty pneumatic cylinders

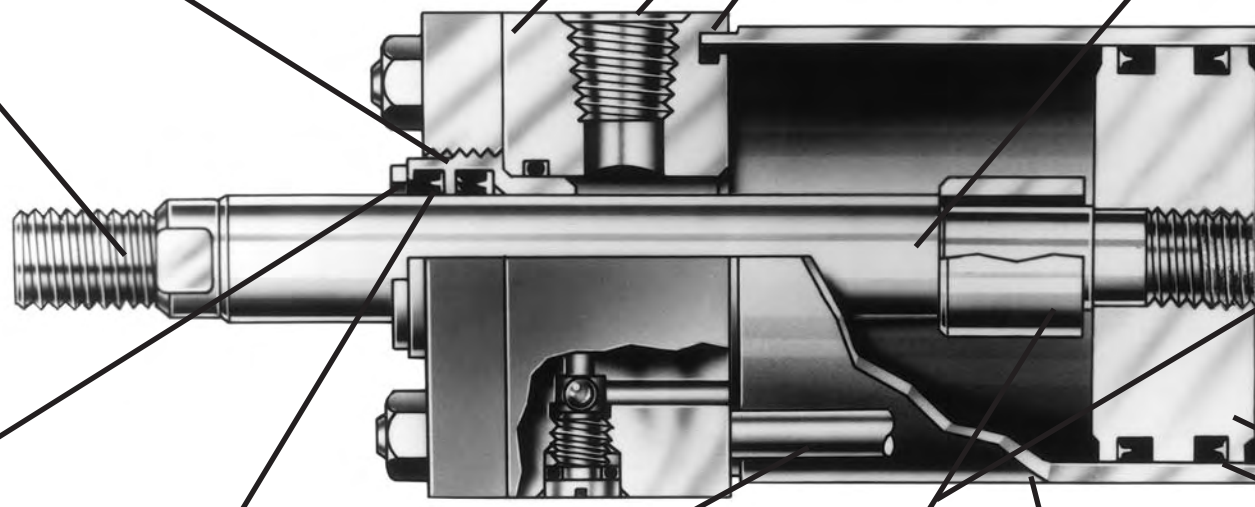

Steel Head – Bored and grooved to provide concentricity for mating parts.

Ports – NPTF ports are standard.

End Seals – Pressure-actuated cylinder body-to-head and cap "O" rings.

Primary Seal – Unique Serrated Lipseal™ is a proven leakproof design, completely self-compensating and self-relieving to withstand variations and conform to mechanical deflection that may occur.

Piston Rod Stud – Furnished on 2" diameter rods and smaller when standard style #4 rod end threads are required or on 1³/₈" diameter rods and smaller when style #8 threads are required. Also available in 2 times the catalog "A" dimension length. Studs have rolled threads and are made from high strength steel. Anaerobic adhesive is used to permanently lock the stud to the piston rod.

"Jewel" Rod Gland Assembly – Externally removable without cylinder disassembly. Long bearing surface is inboard of the seals, assuring positive lubrication from within the cylinder. An "O" ring is used as a seal between gland and head, and also serves as a prevailing torque-type lock.

Secondary Seal – Double-Service Wiperseal™ – acts as a secondary pressure seal on the extend stroke and cleans the rod on the return stroke.

High Strength Tie Rods – Made from 100,000 psi minimum yield steel with rolled threads for added strength.

Adjustable Floating Cushions – Cushions are optional and can be supplied at head end, cap end, or both ends without change in envelope or mounting dimensions.

The Cylinder Body – Hard chrome-plated bore, steel tubing honed to a 15 micro inch finish on 1½" through 14" bore sizes. 1" bore size is aluminum with hard-coated bore.

Adjustable floating cushions

Cushions are optional, and can be supplied at head end, cap end, or both ends without change in envelope or mounting dimensions. All Parker cushions are adjustable.

The Series 2A cylinder design incorporates the longest cushion sleeve and cushion spear that can be provided in the standard envelope without decreasing the rod bearing and piston bearing lengths.

(1) When a cushion is specified at the head end:

a. A self-centering sleeve is furnished on the piston rod assembly.

b. A needle valve is provided that is flush with the side of the head when wide open. It may be identified by the fact that it is socket-keyed. It is located on side number 2, in all mounting styles except D, DB, DD, and E. In these styles it is located on side number 3.

c. A springless check valve is provided that is also flush with the side of the head and is mounted adjacent to the needle valve except on certain bores of mounting style C where it is mounted opposite the needle valve. It may be identified by the fact that it is slotted.

d. The check and needle valves are interchangeable in the head.

(2) When a cushion is specified at the cap end:

a. A cushion spear is provided on the piston rod assembly.

b. A "float check" self-centering bushing is provided which incorporates a large flow check valve for fast "out-stroke" action.

c. A socket-keyed needle valve is provided that is flush with the side of the cap when wide open. It is located on side number 2 in all mounting styles except D, DB, DD, and E. In these styles it is located on side number 3.

For additional information – call your local Parker Cylinder Distributor.

800.696-6165 www.comoso.com

Piston Rod – Medium carbon steel, induction case-hardened, hard chrome-plated and polished to 10 RMS finish. Piston rods are made from 90,000 to 100,000 psi minimum yield material in 1/2" through 4" diameters. Larger diameters vary between 57,000 and 90,000 psi minimum material, depending on rod diameter. The piston thread equals the catalog style #4 rod end thread for each rod diameter to assure proper piston-to-rod thread strength. Two wrench flats are provided for rod end attachment.

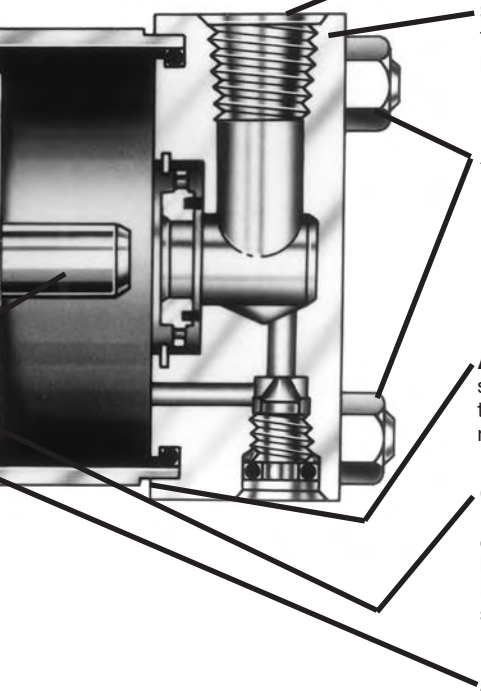

Ports – NPTF ports are standard.

Steel Cap – Bored and grooved to provide concentricity for mating parts.

Alloy Steel Tie Rod Nuts

Align-A-Groove – A 3/16" wide surface machined at each end of the cylinder body. Makes precise mounting quick and easy.

One-Piece Nodular Iron Piston – The wide piston surface contacting cylinder bore reduces bearing loads. Anaerobic adhesive is used to permanently lock and seal the piston to the rod.

Piston Lipseal – Fully dynamic and self-compensating for variations in pressure, mechanical deflections and wear.

The exclusive "Jewel" gland gives you longer cylinder life, better performance and lower costs.

An extra-long inboard bearing surface insures lubrication from within the cylinder. Outboard of the bearing surface are two leakproof seals – The Lipseal and Wiperseal. The serrated Lipseal (primary seal) is completely self-compensating and self-relieving. It adjusts to mechanical deflections or any pressure variation from near-zero to rated operating pressure. The result is positive, no-leak sealing – regardless of conditions.

The Wiperseal does double duty. On the advance stroke, it acts as a secondary pressure seal. On the return, it wipes away any dirt on the rod. This means less wear on bearing surfaces and internal parts. Longer life for working parts. And, less loss of fluid. Plus, you can replace a "Jewel" gland without removing the tie rods or the retainer. Just a few twists with a spanner wrench does the job.

Prelubricated Wearing Surfaces

Parker Series 2A Air Cylinders are factory prelubricated. Lube-A-Cyl applied to seals, piston, cylinder bore, piston rod and gland surfaces provides lubrication for normal operation. Lube-A-Cyl has been field and laboratory tested, and is recommended by Parker for air cylinders where lubricant should remain in the cylinder and not be expelled into the atmosphere.

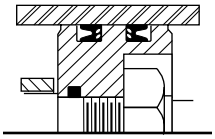

Piston with Retainer Nut – Optional at extra charge.

A

Cushion Length

Cylinder Bore (Inches)	Rod Diameter* (Inches)	Rod Number	Cushion Length (Inches)	
			Head*	Cap
1 1/2	5/8	1	7/8	13/16
	1	2	7/8	13/16
2	5/8	1	7/8	13/16
	1 3/8	2	7/8	13/16
2 1/2	5/8	1	7/8	13/16
	1 3/4	2	7/8	13/16
3 1/4	1	1	1 1/8	1
	2	2	13/16	1
4	1	1	1 1/8	1
	2 1/2	2	13/16	1
5	1	1	1 1/8	1
	3 1/2	2	13/16	1

Cylinder Bore (Inches)	Rod Diameter* (Inches)	Rod Number	Cushion Length (Inches)	
			Head*	Cap
6	1 3/8	1	1 3/8	1 1/4
	4	2	1 1/16	1 1/4
7	1 3/8	1	1 1/16	1 1/4
	2	4	1 1/16	1 1/4
8	1 3/8	1	1 1/16	1 1/4
	5 1/2	2	15/16	1 1/4
10	1 3/4	1	1 5/16	1 3/4
	5 1/2	0	1 3/16	1 3/4
12	2	1	1 5/16	1 3/4
	5 1/2	9	1 3/16	1 3/4
14	2 1/2	1	1 3/4	2
	5 1/2	8	1 11/16	2

*Head end cushions for rod diameters not listed have cushion lengths with the limits shown.
For cushion selection and sizing see Section C.

Tie Rods Extended

Style TB
(NFPA Style MX3)

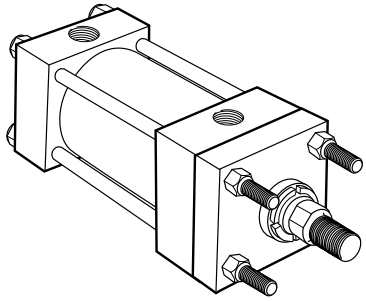

Basic Mounting (T) —
NFPA MX0 — no tie rods extended can be supplied upon request.

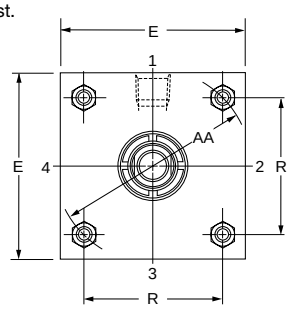

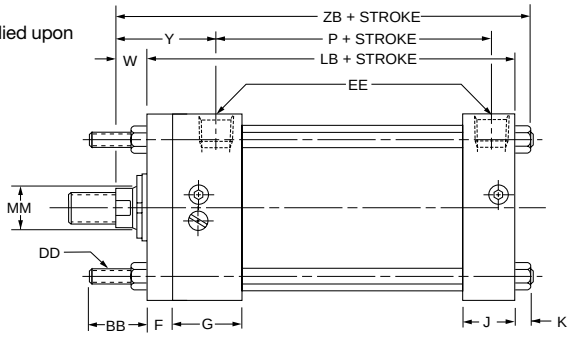

Style TB (NFPA MX3). Head Tie Rods Extended, illustrated: Style TC (NFPA MX2), Cap Tie Rods Extended; and Style TD (NFPA MX1), Both Ends Tie Rods Extended are also available. All "T" styles can be dimensioned from Style TB drawing at right.

Head Rectangular Flange

Style J
(NFPA Style MF1)

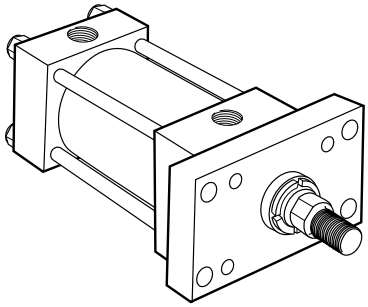

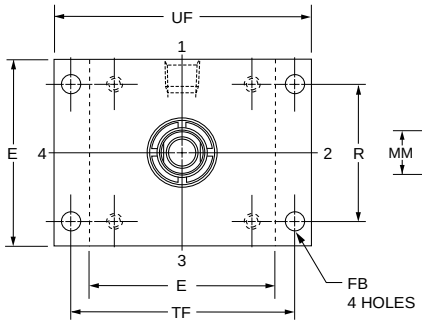

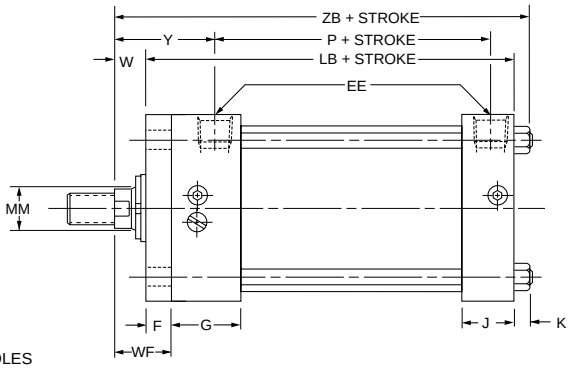

Cap Rectangular Flange

Style H
(NFPA Style MF2)

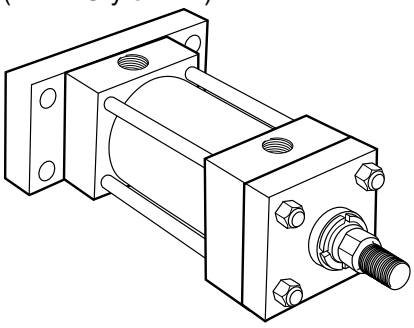

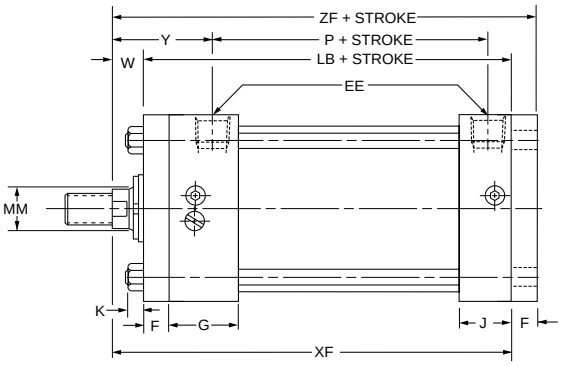

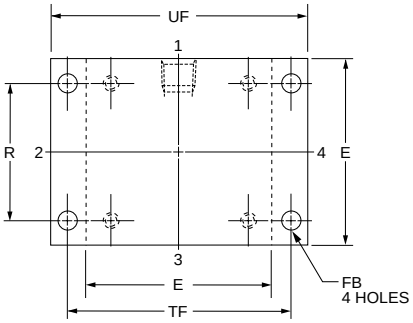

Rod End Dimensions — see table 2

Thread Style 4
(NFPA Style SM)
Small Male

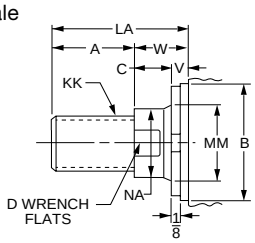

Thread Style 8
(NFPA Style IM)
Intermediate Male

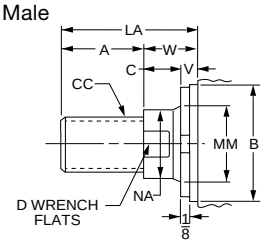

Thread Style 9
(NFPA Style SF)
Small Female

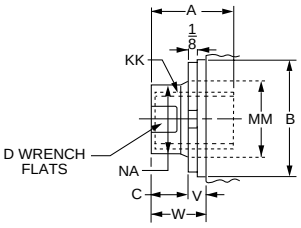

A high strength rod end stud is supplied on thread style 4 through 2" diameter rods and on thread style 8 through 1 3/8" diameter rods. Larger sizes or special rod ends are cut threads. Style 4 rod ends are recommended where the workpiece is secured against the rod shoulder. When the workpiece is not shouldered, style 4 rod ends are recommended through 2" piston rod diameters and style 8 rod ends are recommended on larger diameters. Use style 9 for applications where female rod end threads are required. If rod end is not specified, style 4 will be supplied.

"Special" Thread Style 3

Special thread, extension, rod eye, blank, etc., are also available.

To order, specify "Style 3" and give desired dimensions for CC or KK, A and LA. If otherwise special, furnish dimensioned sketch.

For additional information – call your local Parker Cylinder Distributor.

800.696-6165 www.comoso.com

Table 1—Envelope and Mounting Dimensions

Bore	AA	BB	DD	E	EE NPTF	F	FB	G	J	K	R	TF	UF	Add Stroke LB	Add Stroke P
1*	1.53	3/4	10-24	■	1/4	3/8	1/4	1 1/2	1	3/16	1.08	2	2 1/2	3 7/8	2 1/8
1 1/2	2.02	1	1/4-28	2	3/8**	3/8	5/16	1 1/2	1	1/4	1.43	2 3/4	3 3/8	4	2 1/4
2	2.6	1 1/8	5/16-24	2 1/2	3/8**	3/8	3/8	1 1/2	1	5/16	1.84	3 3/8	4 1/8	4	2 1/4
2 1/2	3.1	1 1/8	5/16-24	3	3/8**	3/8	3/8	1 1/2	1	5/16	2.19	3 7/8	4 5/8	4 1/8	2 3/8
3 1/4	3.9	1 3/8	3/8-24	3 3/4	1/2	5/8	7/16	1 3/4	1 1/4	3/8	2.76	4 11/16	5 1/2	4 7/8	2 5/8
4	4.7	1 3/8	3/8-24	4 1/2	1/2	5/8	7/16	1 3/4	1 1/4	3/8	3.32	5 7/16	6 1/4	4 7/8	2 5/8
5	5.8	1 13/16	1/2-20	5 1/2	1/2	5/8	9/16	1 3/4	1 1/4	7/16	4.10	6 5/8	7 5/8	5 1/8	2 7/8
6	6.9	1 13/16	1/2-20	6 1/2	3/4	3/4	9/16	2	1 1/2	7/16	4.88	7 5/8	8 5/8	5 3/4	3 1/8

* Cushions not available on 1" bore.
** On 1", 1 1/2", 2" and 2 1/2" bore sizes, the head-end (only) pipe thread is not full depth on cylinders with No. 2 rods. Minimum of three full threads available.
■ 1" bore head dimension is 1 3/4" x 1 1/2". See page B20.

Table 2—Rod Dimensions

Table 3 — Envelope and Mounting Dimensions

Bore	Rod No.	Rod Dia. MM	Thread Style 8 CC	Thread Style 4 & 9 KK	Rod Extensions and Pilot Dimensions A	B (+.000 -.002)	C	D	LA	NA	V	W	WF	Y	Add Stroke XF	Add Stroke ZB	Add Stroke ZF
1	1(Std.)	1/2	7/16-20	5/16-24	5/8	.999	3/8	3/8	1 1/4	7/16	1/4	5/8	1	1 15/16	4 1/2	4 11/16	4 7/8
	2	5/8	1/2-20	7/16-20	3/4	1.124	3/8	1/2	1 3/8	9/16	1/4	5/8	1	1 15/16	4 1/2	4 11/16	4 7/8
1 1/2	1(Std.)	5/8	1/2-20	7/16-20	3/4	1.124	3/8	1/2	1 3/8	9/16	1/4	5/8	1	1 15/16	4 5/8	4 7/8	5
	2	1	7/8-14	3/4-16	1 1/8	1.499	1/2	7/8	2 1/8	15/16	1/2	1	1 3/8	2 5/16	5	5 1/4	5 3/8
2	1(Std.)	5/8	1/2-20	7/16-20	3/4	1.124	3/8	1/2	1 3/8	9/16	1/4	5/8	1	1 15/16	4 5/8	4 15/16	5
	2	1 3/8	1 1/4-12	1-14	1 5/8	1.999	5/8	1 1/8	2 7/8	1 5/16	5/8	1 1/4	1 5/8	2 9/16	5 1/4	5 9/16	5 5/8
	3	1	7/8-14	3/4-16	1 1/8	1.499	1/2	7/8	2 1/8	15/16	1/2	1	1 3/8	2 5/16	5	5 5/16	5 3/8
2 1/2	1(Std.)	5/8	1/2-20	7/16-20	3/4	1.124	3/8	1/2	1 3/8	9/16	1/4	5/8	1	1 15/16	4 3/4	5 1/16	5 1/8
	2	1 3/4	1 1/2-12	1 1/4-12	2	2.374	3/4	1 1/2	3 1/2	1 11/16	3/4	1 1/2	1 7/8	2 13/16	5 5/8	5 15/16	6
	3	1	7/8-14	3/4-16	1 1/8	1.499	1/2	7/8	2 1/8	15/16	1/2	1	1 3/8	2 5/16	5 1/8	5 7/16	5 1/2
	4	1 3/8	1 1/4-12	1-14	1 5/8	1.999	5/8	1 1/8	2 7/8	1 5/16	5/8	1 1/4	1 5/8	2 9/16	5 3/8	5 11/16	5 3/4
3 1/4	1(Std.)	1	7/8-14	3/4-16	1 1/8	1.499	1/2	7/8	1 7/8	15/16	1/4	3/4	1 3/8	2 7/16	5 5/8	6	6 1/4
	2	2	1 3/4-12	1 1/2-12	2 1/4	2.624	7/8	1 11/16	3 5/8	1 15/16	1/2	1 3/8	2	3 1/16	6 1/4	6 5/8	6 7/8
	3	1 3/8	1 1/4-12	1-14	1 5/8	1.999	5/8	1 1/8	2 5/8	1 5/16	3/8	1	1 5/8	2 11/16	5 7/8	6 1/4	6 1/2
	4	1 3/4	1 1/2-12	1 1/4-12	2	2.374	3/4	1 1/2	3 1/4	1 11/16	1/2	1 1/4	1 7/8	2 15/16	6 1/8	6 1/2	6 3/4
4	1(Std.)	1	7/8-14	3/4-16	1 1/8	1.499	1/2	7/8	1 7/8	15/16	1/4	3/4	1 3/8	2 7/16	5 5/8	6	6 1/4
	2	2 1/2	2 1/4-12	1 7/8-12	3	3.124	1	2 1/16	4 5/8	2 3/8	5/8	1 5/8	2 1/4	3 5/16	6 1/2	6 7/8	7 1/8
	3	1 3/8	1 1/4-12	1-14	1 5/8	1.999	5/8	1 1/8	2 5/8	1 5/16	3/8	1	1 5/8	2 11/16	5 7/8	6 1/4	6 1/2
	4	1 3/4	1 1/2-12	1 1/4-12	2	2.374	3/4	1 1/2	3 1/4	1 11/16	1/2	1 1/4	1 7/8	2 15/16	6 1/8	6 1/2	6 3/4
	5	2	1 3/4-12	1 1/2-12	2 1/4	2.624	7/8	1 11/16	3 5/8	1 15/16	1/2	1 3/8	2	3 1/16	6 1/4	6 5/8	6 7/8
5	1(Std.)	1	7/8-14	3/4-16	1 1/8	1.499	1/2	7/8	1 7/8	15/16	1/4	3/4	1 3/8	2 7/16	5 7/8	6 5/16	6 1/2
	2	3 1/2	3 1/4-12	2 1/2-12	3 1/2	4.249	1	3	5 1/8	3 3/8	5/8	1 5/8	2 1/4	3 5/16	6 3/4	7 3/16	7 3/8
	3	1 3/8	1 1/4-12	1-14	1 5/8	1.999	5/8	1 1/8	2 5/8	1 5/16	3/8	1	1 5/8	2 11/16	6 1/8	6 9/16	6 3/4
	4	1 3/4	1 1/2-12	1 1/4-12	2	2.374	3/4	1 1/2	3 1/4	1 11/16	1/2	1 1/4	1 7/8	2 15/16	6 3/8	6 13/16	7
	5	2	1 3/4-12	1 1/2-12	2 1/4	2.624	7/8	1 11/16	3 5/8	1 15/16	1/2	1 3/8	2	3 1/16	6 1/2	6 15/16	7 1/8
	6	2 1/2	2 1/4-12	1 7/8-12	3	3.124	1	2 1/16	4 5/8	2 3/8	5/8	1 5/8	2 1/4	3 5/16	6 3/4	7 3/16	7 3/8
	7	3	2 3/4-12	2 1/4-12	3 1/2	3.749	1	2 5/8	5 1/8	2 7/8	5/8	1 5/8	2 1/4	3 5/16	6 3/4	7 3/16	7 3/8
6	1(Std.)	1 3/8	1 1/4-12	1-14	1 5/8	1.999	5/8	1 1/8	2 1/2	1 5/16	1/4	7/8	1 5/8	2 13/16	6 5/8	7 1/16	7 3/8
	2	4	3 3/4-12	3-12	4	4.749	1	3 3/8	5 1/2	3 7/8	1/2	1 1/2	2 1/4	3 7/16	7 1/4	7 11/16	8
	3	1 3/4	1 1/2-12	1 1/4-12	2	2.374	3/4	1 1/2	3 1/8	1 11/16	3/8	1 1/8	1 7/8	3 1/16	6 7/8	7 5/16	7 5/8
	4	2	1 3/4-12	1 1/2-12	2 1/4	2.624	7/8	1 11/16	3 1/2	1 15/16	3/8	1 1/4	2	3 3/16	7	7 7/16	7 3/4
	5	2 1/2	2 1/4-12	1 7/8-12	3	3.124	1	2 1/16	4 1/2	2 3/8	1/2	1 1/2	2 1/4	3 7/16	7 1/4	7 11/16	8
	6	3	2 3/4-12	2 1/4-12	3 1/2	3.749	1	2 5/8	5	2 7/8	1/2	1 1/2	2 1/4	3 7/16	7 1/4	7 11/16	8
	7	3 1/2	3 1/4-12	2 1/2-12	3 1/2	4.249	1	3	5	3 3/8	1/2	1 1/2	2 1/4	3 7/16	7 1/4	7 11/16	8

Head Square Flange

Style JB
(NFPA Style MF5)

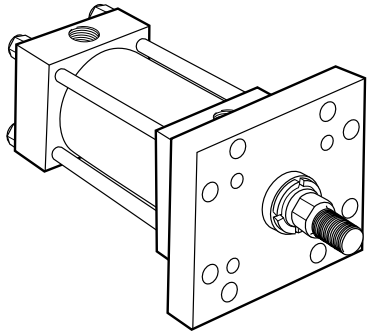

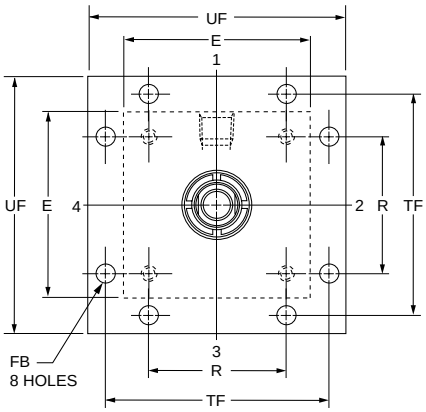

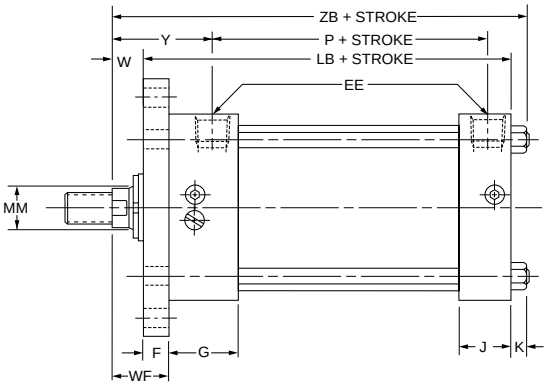

Cap Square Flange

Style HB
(NFPA Style MF6)

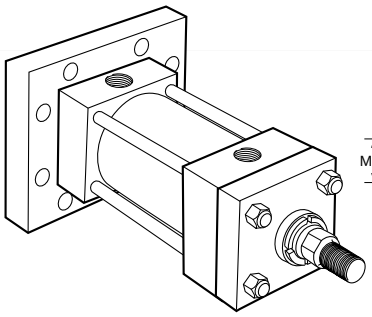

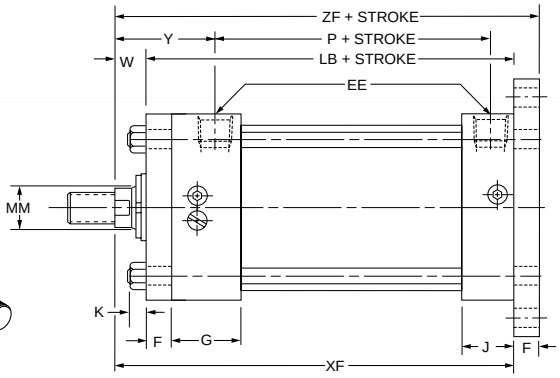

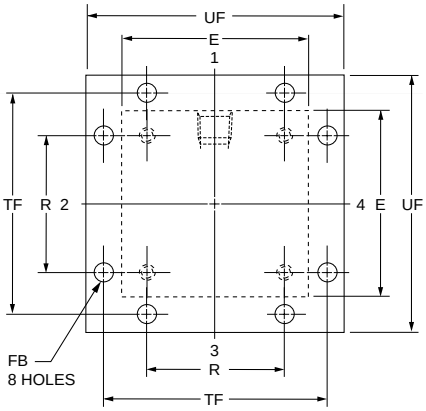

Rod End Dimensions — see table 2

Thread Style 4
(NFPA Style SM)
Small Male

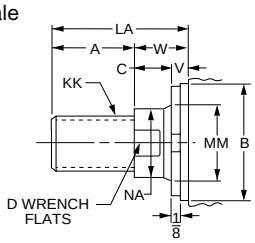

Thread Style 8
(NFPA Style IM)
Intermediate Male

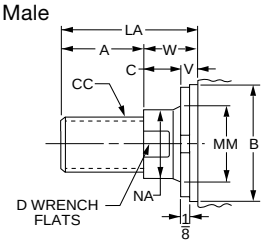

Thread Style 9
(NFPA Style SF)
Small Female

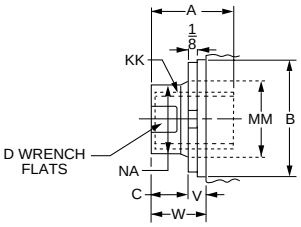

A high strength rod end stud is supplied on thread style 4 through 2" diameter rods and on thread style 8 through 1³/₈" diameter rods. Larger sizes or special rod ends are cut threads. Style 4 rod ends are recommended where the workpiece is secured against the rod shoulder. When the workpiece is not shouldered, style 4 rod ends are recommended through 2" piston rod diameters and style 8 rod ends are recommended on larger diameters. Use style 9 for applications where female rod end threads are required. If rod end is not specified, style 4 will be supplied.

"Special" Thread Style 3

Special thread, extension, rod eye, blank, etc., are also available.

To order, specify "Style 3" and give desired dimensions for CC or KK, A and LA. If otherwise special, furnish dimensioned sketch.

For additional information – call your local Parker Cylinder Distributor.

800.696-6165 www.comoso.com

Table 1—Envelope and Mounting Dimensions

Bore	E	EE NPTF	F	FB	G	J	K	R	TF	UF	Add Stroke LB	Add Stroke P
1*	■	1/4	3/8	1/4	1 1/2	1	3/16	1.08	2	2 1/2	3 7/8	2 1/8
1 1/2	2	3/8**	3/8	5/16	1 1/2	1	1/4	1.43	2 3/4	3 3/8	4	2 1/4
2	2 1/2	3/8**	3/8	3/8	1 1/2	1	5/16	1.84	3 3/8	4 1/8	4	2 1/4
2 1/2	3	3/8**	3/8	3/8	1 1/2	1	5/16	2.19	3 7/8	4 5/8	4 1/8	2 3/8
3 1/4	3 3/4	1/2	5/8	7/16	1 3/4	1 1/4	3/8	2.76	4 11/16	5 1/2	4 7/8	2 5/8
4	4 1/2	1/2	5/8	7/16	1 3/4	1 1/4	3/8	3.32	5 7/16	6 1/4	4 7/8	2 5/8
5	5 1/2	1/2	5/8	9/16	1 3/4	1 1/4	7/16	4.10	6 5/8	7 5/8	5 1/8	2 7/8
6	6 1/2	3/4	3/4	9/16	2	1 1/2	7/16	4.88	7 5/8	8 5/8	5 3/4	3 1/8

* Cushions not available on 1" bore.
** On 1", 1 1/2", 2" and 2 1/2" bore sizes, the head-end (only) pipe thread is not full depth on cylinders with No. 2 rods. Minimum of three full threads available.
■ 1" bore head dimension is 1 3/4" x 1 1/2". See page B20.

Table 2—Rod Dimensions

Table 3 — Envelope and Mounting Dimensions

Bore	Rod No.	Rod Dia. MM	Thread Style 8 CC	Thread Style 4 & 9 KK	Rod Extensions and Pilot Dimensions A	+.000 -.002 B	C	D	LA	NA	V	W	WF	Y	Add Stroke XF	Add Stroke ZB	Add Stroke ZF
1	1(Std.)	1/2	7/16-20	5/16-24	5/8	.999	3/8	3/8	1 1/4	7/16	1/4	5/8	1	1 15/16	4 1/2	4 11/16	4 7/8
	2	5/8	1/2-20	7/16-20	3/4	1.124	3/8	1/2	1 3/8	9/16	1/4	5/8	1	1 15/16	4 1/2	4 11/16	4 7/8
1 1/2	1(Std.)	5/8	1/2-20	7/16-20	3/4	1.124	3/8	1/2	1 3/8	9/16	1/4	5/8	1	1 15/16	4 5/8	4 7/8	5
	2	1	7/8-14	3/4-16	1 1/8	1.499	1/2	7/8	2 1/8	15/16	1/2	1	1 3/8	2 5/16	5	5 1/4	5 3/8
2	1(Std.)	5/8	1/2-20	7/16-20	3/4	1.124	3/8	1/2	1 3/8	9/16	1/4	5/8	1	1 15/16	4 5/8	4 15/16	5
	2	1 3/8	1 1/4-12	1-14	1 5/8	1.999	5/8	1 1/8	2 7/8	1 5/16	5/8	1 1/4	1 5/8	2 9/16	5 1/4	5 9/16	5 5/8
	3	1	7/8-14	3/4-16	1 1/8	1.499	1/2	7/8	2 1/8	15/16	1/2	1	1 3/8	2 5/16	5	5 5/16	5 3/8
2 1/2	1(Std.)	5/8	1/2-20	7/16-20	3/4	1.124	3/8	1/2	1 3/8	9/16	1/4	5/8	1	1 15/16	4 3/4	5 1/16	5 1/8
	2	1 3/4	1 1/2-12	1 1/4-12	2	2.374	3/4	1 1/2	3 1/2	1 11/16	3/4	1 1/2	1 7/8	2 13/16	5 5/8	5 15/16	6
	3	1	7/8-14	3/4-16	1 1/8	1.499	1/2	7/8	2 1/8	15/16	1/2	1	1 3/8	2 5/16	5 1/8	5 7/16	5 1/2
	4	1 3/8	1 1/4-12	1-14	1 5/8	1.999	5/8	1 1/8	2 7/8	1 5/16	5/8	1 1/4	1 5/8	2 9/16	5 3/8	5 11/16	5 3/4
3 1/4	1(Std.)	1	7/8-14	3/4-16	1 1/8	1.499	1/2	7/8	1 7/8	15/16	1/4	3/4	1 3/8	2 7/16	5 5/8	6	6 1/4
	2	2	1 3/4-12	1 1/2-12	2 1/4	2.624	7/8	1 11/16	3 5/8	1 15/16	1/2	1 3/8	2	3 1/16	6 1/4	6 5/8	6 7/8
	3	1 3/8	1 1/4-12	1-14	1 5/8	1.999	5/8	1 1/8	2 5/8	1 5/16	3/8	1	1 5/8	2 11/16	5 7/8	6 1/4	6 1/2
	4	1 3/4	1 1/2-12	1 1/4-12	2	2.374	3/4	1 1/2	3 1/4	1 11/16	1/2	1 1/4	1 7/8	2 15/16	6 1/8	6 1/2	6 3/4
4	1(Std.)	1	7/8-14	3/4-16	1 1/8	1.499	1/2	7/8	1 7/8	15/16	1/4	3/4	1 3/8	2 7/16	5 5/8	6	6 1/4
	2	2 1/2	2 1/4-12	1 7/8-12	3	3.124	1	2 1/16	4 5/8	2 3/8	5/8	1 5/8	2 1/4	3 5/16	6 1/2	6 7/8	7 1/8
	3	1 3/8	1 1/4-12	1-14	1 5/8	1.999	5/8	1 1/8	2 5/8	1 5/16	3/8	1	1 5/8	2 11/16	5 7/8	6 1/4	6 1/2
	4	1 3/4	1 1/2-12	1 1/4-12	2	2.374	3/4	1 1/2	3 1/4	1 11/16	1/2	1 1/4	1 7/8	2 15/16	6 1/8	6 1/2	6 3/4
	5	2	1 3/4-12	1 1/2-12	2 1/4	2.624	7/8	1 11/16	3 5/8	1 15/16	1/2	1 3/8	2	3 1/16	6 1/4	6 5/8	6 7/8
5	1(Std.)	1	7/8-14	3/4-16	1 1/8	1.499	1/2	7/8	1 7/8	15/16	1/4	3/4	1 3/8	2 7/16	5 7/8	6 5/16	6 1/2
	2	3 1/2	3 1/4-12	2 1/2-12	3 1/2	4.249	1	3	5 1/8	3 3/8	5/8	1 5/8	2 1/4	3 5/16	6 3/4	7 3/16	7 3/8
	3	1 3/8	1 1/4-12	1-14	1 5/8	1.999	5/8	1 1/8	2 5/8	1 5/16	3/8	1	1 5/8	2 11/16	6 1/8	6 9/16	6 3/4
	4	1 3/4	1 1/2-12	1 1/4-12	2	2.374	3/4	1 1/2	3 1/4	1 11/16	1/2	1 1/4	1 7/8	2 15/16	6 3/8	6 13/16	7
	5	2	1 3/4-12	1 1/2-12	2 1/4	2.624	7/8	1 11/16	3 5/8	1 15/16	1/2	1 3/8	2	3 1/16	6 1/2	6 15/16	7 1/8
	6	2 1/2	2 1/4-12	1 7/8-12	3	3.124	1	2 1/16	4 5/8	2 3/8	5/8	1 5/8	2 1/4	3 5/16	6 3/4	7 3/16	7 3/8
	7	3	2 3/4-12	2 1/4-12	3 1/2	3.749	1	2 5/8	5 1/8	2 7/8	5/8	1 5/8	2 1/4	3 5/16	6 3/4	7 3/16	7 3/8
6	1(Std.)	1 3/8	1 1/4-12	1-14	1 5/8	1.999	5/8	1 1/8	2 1/2	1 5/16	1/4	7/8	1 5/8	2 13/16	6 5/8	7 1/16	7 3/8
	2	4	3 3/4-12	3-12	4	4.749	1	3 3/8	5 1/2	3 7/8	1/2	1 1/2	2 1/4	3 7/16	7 1/4	7 11/16	8
	3	1 3/4	1 1/2-12	1 1/4-12	2	2.374	3/4	1 1/2	3 1/8	1 11/16	3/8	1 1/8	1 7/8	3 1/16	6 7/8	7 5/16	7 5/8
	4	2	1 3/4-12	1 1/2-12	2 1/4	2.624	7/8	1 11/16	3 1/2	1 15/16	3/8	1 1/4	2	3 3/16	7	7 7/16	7 3/4
	5	2 1/2	2 1/4-12	1 7/8-12	3	3.124	1	2 1/16	4 1/2	2 3/8	1/2	1 1/2	2 1/4	3 7/16	7 1/4	7 11/16	8
	6	3	2 3/4-12	2 1/4-12	3 1/2	3.749	1	2 5/8	5	2 7/8	1/2	1 1/2	2 1/4	3 7/16	7 1/4	7 11/16	8
	7	3 1/2	3 1/4-12	2 1/2-12	3 1/2	4.249	1	3	5	3 3/8	1/2	1 1/2	2 1/4	3 7/16	7 1/4	7 11/16	8

Side Lug

Style C
(NFPA Style MS2)

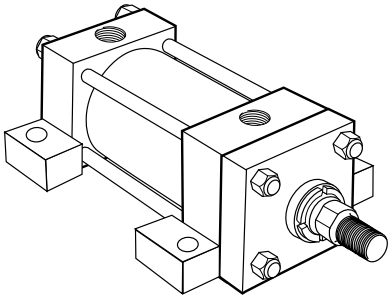

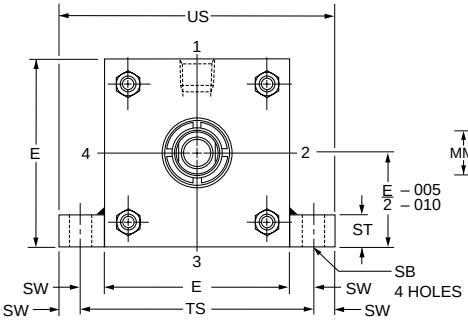

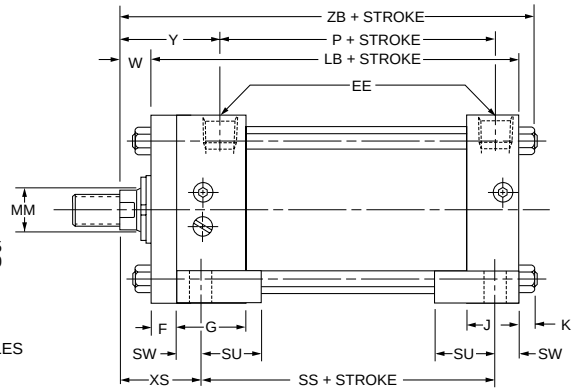

Centerline Lugs

Style E
(NFPA Style MS3)

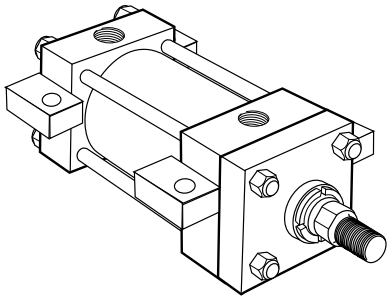

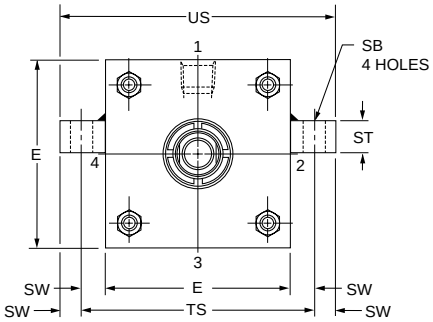

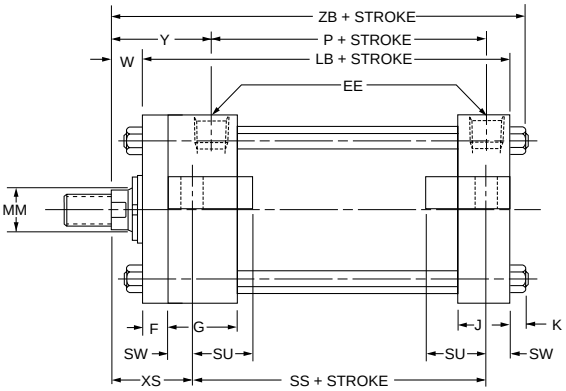

Side Tapped

Style F
(NFPA Style MS4)

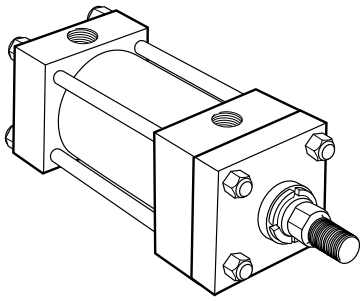

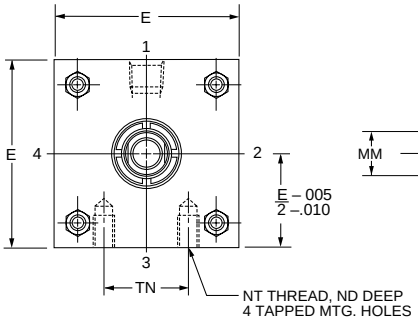

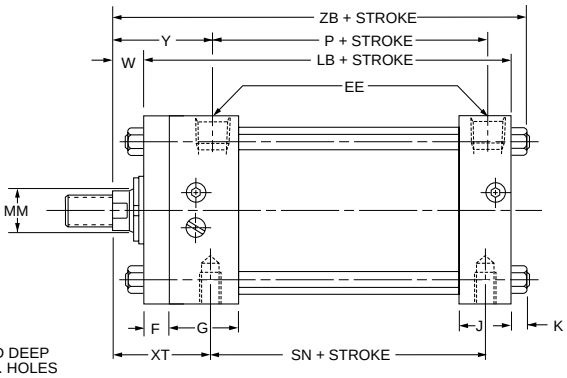

Rod End Dimensions — see table 2

Thread Style 4
(NFPA Style SM)
Small Male

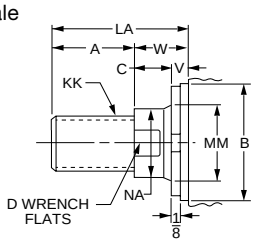

Thread Style 8
(NFPA Style IM)
Intermediate Male

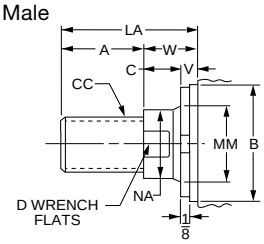

Thread Style 9
(NFPA Style SF)
Small Female

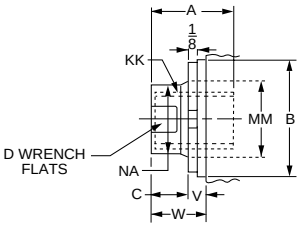

A high strength rod end stud is supplied on thread style 4 through 2" diameter rods and on thread style 8 through 1³/₈" diameter rods. Larger sizes or special rod ends are cut threads. Style 4 rod ends are recommended where the workpiece is secured against the rod shoulder. When the workpiece is not shouldered, style 4 rod ends are recommended through 2" piston rod diameters and style 8 rod ends are recommended on larger diameters. Use style 9 for applications where female rod end threads are required. If rod end is not specified, style 4 will be supplied.

"Special" Thread Style 3

Special thread, extension, rod eye, blank, etc., are also available.

To order, specify "Style 3" and give desired dimensions for CC or KK, A and LA. If otherwise special, furnish dimensioned sketch.

For additional information – call your local Parker Cylinder Distributor.

Table 1—Envelope and Mounting Dimensions

Bore	E	EE NPTF	F	G	J	K	NT	SB•	ST	SU	SW	TN	TS	US	Add Stroke LB	P	SN	SS
1*	■	1/4	3/8	1 1/2	1	3/16	10-24	9/32†	5/16†	3/4†	5/16†	9/16	2 1/8†	2 3/4†	3 7/8	2 1/8	2 1/8	2 7/8†
1 1/2	2	3/8**	3/8	1 1/2	1	1/4	1/4-20	7/16	1/2	15/16	3/8	5/8	2 3/4	3 1/2	4	2 1/4	2 1/4	2 7/8
2	2 1/2	3/8**	3/8	1 1/2	1	5/16	5/16-18	7/16	1/2	15/16	3/8	7/8	3 1/4	4	4	2 1/4	2 1/4	2 7/8
2 1/2	3	3/8**	3/8	1 1/2	1	5/16	3/8-16	7/16	1/2	15/16	3/8	1 1/4	3 3/4	4 1/2	4 1/8	2 3/8	2 3/8	3
3 1/4	3 3/4	1/2	5/8	1 3/4	1 1/4	3/8	1/2-13	9/16	3/4	1 1/4	1/2	1 1/2	4 3/4	5 3/4	4 7/8	2 5/8	2 5/8	3 1/4
4	4 1/2	1/2	5/8	1 3/4	1 1/4	3/8	1/2-13	9/16	3/4	1 1/4	1/2	2 1/16	5 1/2	6 1/2	4 7/8	2 5/8	2 5/8	3 1/4
5	5 1/2	1/2	5/8	1 3/4	1 1/4	7/16	5/8-11	13/16	1	1 9/16	11/16	2 11/16	6 7/8	8 1/4	5 1/8	2 7/8	2 7/8	3 1/8
6	6 1/2	3/4	3/4	2	1 1/2	7/16	3/4-10	13/16	1	1 9/16	11/16	3 1/4	7 7/8	9 1/4	5 3/4	3 1/8	3 1/8	3 5/8

* Cushions not available on 1" bore.
** On 1", 1 1/2", 2" and 2 1/2" bore sizes, the head-end (only) pipe thread is not full depth on cylinders with No. 2 rods. Minimum of three full threads available.
• Upper surface spot-faced for socket head screws.
† Mounting style E not available in 1" bore. ■ 1" bore head dimension is 1 3/4" x 1 1/2". See page B20.

Table 2—Rod Dimensions

Table 3 — Envelope and Mounting Dimensions

Bore	Rod No.	Rod Dia. MM	Thread Style 8 CC	Thread Style 4 & 9 KK	Rod Extensions and Pilot Dimensions A	+.000 -.002 B	C	D	LA	NA	V	W	ND	XS	XT	Y	Add Stroke ZB
1	1(Std.)	1/2	7/16-20	5/16-24	5/8	.999	3/8	3/8	1 1/4	7/16	1/4	5/8	1/4	1 5/16*	1 15/16	1 15/16	4 11/16
	2	5/8	1/2-20	7/16-20	3/4	1.124	3/8	1/2	1 3/8	9/16	1/4	5/8	1/4	1 5/16*	1 15/16	1 15/16	4 11/16
1 1/2	1(Std.)	5/8	1/2-20	7/16-20	3/4	1.124	3/8	1/2	1 3/8	9/16	1/4	5/8	5/16	1 3/8	1 15/16	1 15/16	4 7/8
	2	1	7/8-14	3/4-16	1 1/8	1.499	1/2	7/8	2 1/8	15/16	1/2	1	5/16	1 3/4	2 5/16	2 5/16	5 1/4
2	1(Std.)	5/8	1/2-20	7/16-20	3/4	1.124	3/8	1/2	1 3/8	9/16	1/4	5/8	11/32	1 3/8	1 15/16	1 15/16	4 15/16
	2	1 3/8	1 1/4-12	1-14	1 5/8	1.999	5/8	1 1/8	2 7/8	1 5/16	5/8	1 1/4	11/32	2	2 9/16	2 9/16	5 9/16
	3	1	7/8-14	3/4-16	1 1/8	1.499	1/2	7/8	2 1/8	15/16	1/2	1	11/32	1 3/4	2 5/16	2 5/16	5 5/16
2 1/2	1(Std.)	5/8	1/2-20	7/16-20	3/4	1.124	3/8	1/2	1 3/8	9/16	1/4	5/8	7/16	1 3/8	1 15/16	1 15/16	5 1/16
	2	1 3/4	1 1/2-12	1 1/4-12	2	2.374	3/4	1 1/2	3 1/2	1 11/16	3/4	1 1/2	7/16	2 1/4	2 13/16	2 13/16	5 15/16
	3	1	7/8-14	3/4-16	1 1/8	1.499	1/2	7/8	2 1/8	15/16	1/2	1	7/16	1 3/4	2 5/16	2 5/16	5 7/16
	4	1 3/8	1 1/4-12	1-14	1 5/8	1.999	5/8	1 1/8	2 7/8	1 5/16	5/8	1 1/4	7/16	2	2 9/16	2 9/16	5 11/16
3 1/4	1(Std.)	1	7/8-14	3/4-16	1 1/8	1.499	1/2	7/8	1 7/8	15/16	1/4	3/4	1/2	1 7/8	2 7/16	2 7/16	6
	2	2	1 3/4-12	1 1/2-12	2 1/4	2.624	7/8	1 11/16	3 5/8	1 15/16	1/2	1 3/8	1/2	2 1/2	3 1/16	3 1/16	6 5/8
	3	1 3/8	1 1/4-12	1-14	1 5/8	1.999	5/8	1 1/8	2 5/8	1 5/16	3/8	1	1/2	2 1/8	2 11/16	2 11/16	6 1/4
	4	1 3/4	1 1/2-12	1 1/4-12	2	2.374	3/4	1 1/2	3 1/4	1 11/16	1/2	1 1/4	1/2	2 3/8	2 15/16	2 15/16	6 1/2
4	1(Std.)	1	7/8-14	3/4-16	1 1/8	1.499	1/2	7/8	1 7/8	15/16	1/4	3/4	5/8	1 7/8	2 7/16	2 7/16	6
	2	2 1/2	2 1/4-12	1 7/8-12	3	3.124	1	2 1/16	4 5/8	2 3/8	5/8	1 5/8	5/8	2 3/4	3 5/16	3 5/16	6 7/8
	3	1 3/8	1 1/4-12	1-14	1 5/8	1.999	5/8	1 1/8	2 5/8	1 5/16	3/8	1	5/8	2 1/8	2 11/16	2 11/16	6 1/4
	4	1 3/4	1 1/2-12	1 1/4-12	2	2.374	3/4	1 1/2	3 1/4	1 11/16	1/2	1 1/4	5/8	2 3/8	2 15/16	2 15/16	6 1/2
	5	2	1 3/4-12	1 1/2-12	2 1/4	2.624	7/8	1 11/16	3 5/8	1 15/16	1/2	1 3/8	5/8	2 1/2	3 1/16	3 1/16	6 5/8
5	1(Std.)	1	7/8-14	3/4-16	1 1/8	1.499	1/2	7/8	1 7/8	15/16	1/4	3/4	3/4	2 1/16	2 7/16	2 7/16	6 5/16
	2	3 1/2	3 1/4-12	2 1/2-12	3 1/2	4.249	1	3	5 1/8	3 3/8	5/8	1 5/8	3/4	2 15/16	3 5/16	3 5/16	7 3/16
	3	1 3/8	1 1/4-12	1-14	1 5/8	1.999	5/8	1 1/8	2 5/8	1 5/16	3/8	1	3/4	2 5/16	2 11/16	2 11/16	6 9/16
	4	1 3/4	1 1/2-12	1 1/4-12	2	2.374	3/4	1 1/2	3 1/4	1 11/16	1/2	1 1/4	3/4	2 9/16	2 15/16	2 15/16	6 13/16
	5	2	1 3/4-12	1 1/2-12	2 1/4	2.624	7/8	1 11/16	3 5/8	1 15/16	1/2	1 3/8	3/4	2 11/16	3 1/16	3 1/16	6 15/16
	6	2 1/2	2 1/4-12	1 7/8-12	3	3.124	1	2 1/16	4 5/8	2 3/8	5/8	1 5/8	3/4	2 15/16	3 5/16	3 5/16	7 3/16
	7	3	2 3/4-12	2 1/4-12	3 1/2	3.749	1	2 5/8	5 1/8	2 7/8	5/8	1 5/8	3/4	2 15/16	3 5/16	3 5/16	7 3/16
6	1(Std.)	1 3/8	1 1/4-12	1-14	1 5/8	1.999	5/8	1 1/8	2 1/2	1 5/16	1/4	7/8	7/8	2 5/16	2 13/16	2 13/16	7 1/16
	2	4	3 3/4-12	3-12	4	4.749	1	3 3/8	5 1/2	3 7/8	1/2	1 1/2	7/8	2 15/16	3 7/16	3 7/16	7 11/16
	3	1 3/4	1 1/2-12	1 1/4-12	2	2.374	3/4	1 1/2	3 1/8	1 11/16	3/8	1 1/8	7/8	2 9/16	3 1/16	3 1/16	7 5/16
	4	2	1 3/4-12	1 1/2-12	2 1/4	2.624	7/8	1 11/16	3 1/2	1 15/16	3/8	1 1/4	7/8	2 11/16	3 3/16	3 3/16	7 7/16
	5	2 1/2	2 1/4-12	1 7/8-12	3	3.124	1	2 1/16	4 1/2	2 3/8	1/2	1 1/2	7/8	2 15/16	3 7/16	3 7/16	7 11/16
	6	3	2 3/4-12	2 1/4-12	3 1/2	3.749	1	2 5/8	5	2 7/8	1/2	1 1/2	7/8	2 15/16	3 7/16	3 7/16	7 11/16
	7	3 1/2	3 1/4-12	2 1/2-12	3 1/2	4.249	1	3	5	3 3/8	1/2	1 1/2	7/8	2 15/16	3 7/16	3 7/16	7 11/16

* Mounting style E not available in 1" bore.

Side End Angles

Style CB
(NFPA Style MS1)

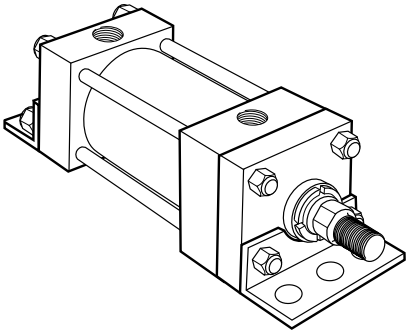

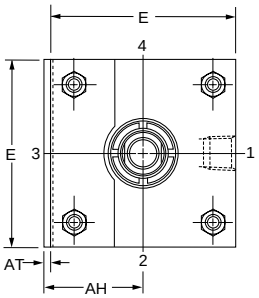

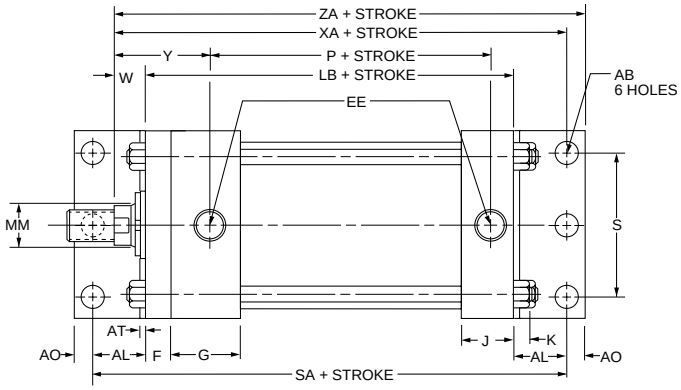

Side End Lugs

Style G
(NFPA Style MS7)

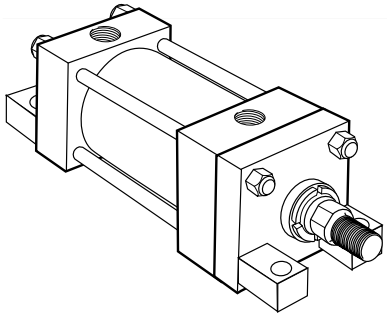

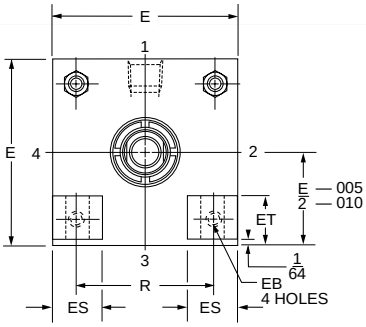

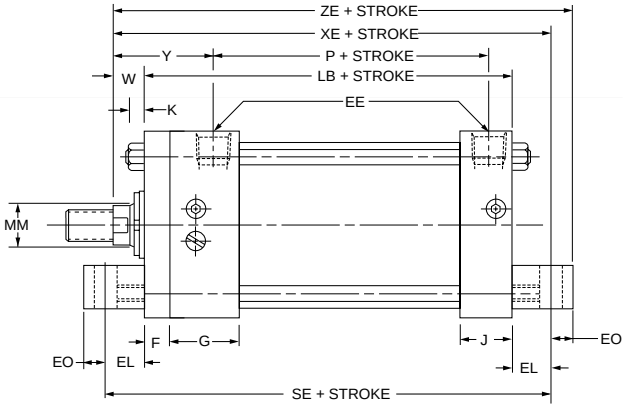

Rod End Dimensions — see table 2

Thread Style 4
(NFPA Style SM)
Small Male

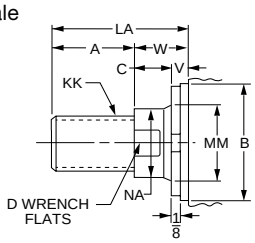

Thread Style 8
(NFPA Style IM)
Intermediate Male

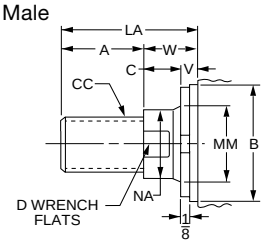

Thread Style 9
(NFPA Style SF)
Small Female

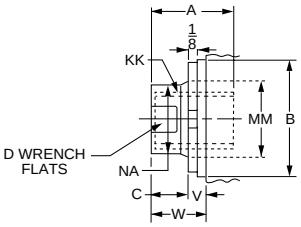

A high strength rod end stud is supplied on thread style 4 through 2" diameter rods and on thread style 8 through 1 3/8" diameter rods. Larger sizes or special rod ends are cut threads. Style 4 rod ends are recommended where the workpiece is secured against the rod shoulder. When the workpiece is not shouldered, style 4 rod ends are recommended through 2" piston rod diameters and style 8 rod ends are recommended on larger diameters. Use style 9 for applications where female rod end threads are required. If rod end is not specified, style 4 will be supplied.

"Special" Thread Style 3

Special thread, extension, rod eye, blank, etc., are also available.

To order, specify "Style 3" and give desired dimensions for CC or KK, A and LA. If otherwise special, furnish dimensioned sketch.

For additional information – call your local Parker Cylinder Distributor.

800.696-6165 www.comoso.com

Table 1—Envelope and Mounting Dimensions

Bore	AB	AH	AL	AO	AT	E	EB	EE NPTF	EL	EO	ES	ET	F	G	J	K	R	S	Add Stroke LB	P	SA	SE
1*	3/8†‡	1†	13/16†	5/16†	1/8†	■	•	1/4	•	•	•	•	3/8	1 1/2	1	3/16	1.08•	15/16†	3 7/8	2 1/8	5 1/2†	•
1 1/2	7/16	1 3/16	1	3/8	1/8	2	5/16	3/8**	3/4	1/4	9/16	17/32	3/8	1 1/2	1	1/4	1.43	1 1/4	4	2 1/4	6	5 1/2
2	7/16	1 7/16	1	3/8	1/8	2 1/2	3/8	3/8**	15/16	5/16	5/8	5/8	3/8	1 1/2	1	5/16	1.84	1 3/4	4	2 1/4	6	5 7/8
2 1/2	7/16	1 5/8	1	3/8	1/8	3	3/8	3/8**	1 1/16	5/16	13/16	25/32	3/8	1 1/2	1	5/16	2.19	2 1/4	4 1/8	2 3/8	6 1/8	6 1/4
3 1/4	9/16	1 15/16	1 1/4	1/2	1/8	3 3/4	7/16	1/2	7/8	3/8	1	15/16	5/8	1 3/4	1 1/4	3/8	2.76	2 3/4	4 7/8	2 5/8	7 3/8	6 5/8
4	9/16	2 1/4	1 1/4	1/2	1/8	4 1/2	7/16	1/2	1	3/8	1 1/4	1 5/32	5/8	1 3/4	1 1/4	3/8	3.32	3 1/2	4 7/8	2 5/8	7 3/8	6 7/8
5	11/16	2 3/4	1 3/8	5/8	3/16	5 1/2	9/16	1/2	1 1/16	1/2	1 3/8	1 3/8	5/8	1 3/4	1 1/4	7/16	4.10	4 1/4	5 1/8	2 7/8	7 7/8	7 1/4
6	13/16	3 1/4	1 3/8	5/8	3/16	6 1/2	9/16	3/4	1	1/2	1 3/4	1 19/32	3/4	2	1 1/2	7/16	4.88	5 1/4	5 3/4	3 1/8	8 1/2	7 3/4

* Cushions not available on 1" bore.
** On 1", 1 1/2", 2" and 2 1/2" bore sizes, the head-end (only) pipe thread is not full depth on cylinders with No. 2 rods. Minimum of three full threads available.
† Mounting style CB available in 1" bore for rod No. 1 only.
‡ Mounting style CB for 1" bore only is furnished with four mounting holes (two each end). Center holes omitted.
■ 1" bore head dimension is 1 3/4" x 1 1/2". See page B20.
• Mounting style G not available in 1" bore.

A

Table 2—Rod Dimensions

Bore	Rod No.	Rod Dia. MM	Thread Style 8 CC	Thread Style 4 & 9 KK	Rod Extensions and Pilot Dimensions A	+.000 -.002 B	C	D	LA	NA	V	W
1	1(Std.)	1/2	7/16-20	5/16-24	5/8	.999	3/8	3/8	1 1/4	7/16	1/4	5/8
	2	5/8	1/2-20	7/16-20	3/4	1.124	3/8	1/2	1 3/8	9/16	1/4	5/8
1 1/2	1(Std.)	5/8	1/2-20	7/16-20	3/4	1.124	3/8	1/2	1 3/8	9/16	1/4	5/8
	2	1	7/8-14	3/4-16	1 1/8	1.499	1/2	7/8	2 1/8	15/16	1/2	1
2	1(Std.)	5/8	1/2-20	7/16-20	3/4	1.124	3/8	1/2	1 3/8	9/16	1/4	5/8
	2	1 3/8	1 1/4-12	1-14	1 5/8	1.999	5/8	1 1/8	2 7/8	1 5/16	5/8	1 1/4
	3	1	7/8-14	3/4-16	1 1/8	1.499	1/2	7/8	2 1/8	15/16	1/2	1
2 1/2	1(Std.)	5/8	1/2-20	7/16-20	3/4	1.124	3/8	1/2	1 3/8	9/16	1/4	5/8
	2	1 3/4	1 1/2-12	1 1/4-12	2	2.374	3/4	1 1/2	3 1/2	1 11/16	3/4	1 1/2
	3	1	7/8-14	3/4-16	1 1/8	1.499	1/2	7/8	2 1/8	15/16	1/2	1
	4	1 3/8	1 1/4-12	1-14	1 5/8	1.999	5/8	1 1/8	2 7/8	1 5/16	5/8	1 1/4
3 1/4	1(Std.)	1	7/8-14	3/4-16	1 1/8	1.499	1/2	7/8	1 7/8	15/16	1/4	3/4
	2	2	1 3/4-12	1 1/2-12	2 1/4	2.624	7/8	1 11/16	3 5/8	1 15/16	1/2	1 3/8
	3	1 3/8	1 1/4-12	1-14	1 5/8	1.999	5/8	1 1/8	2 5/8	1 5/16	3/8	1
	4	1 3/4	1 1/2-12	1 1/4-12	2	2.374	3/4	1 1/2	3 1/4	1 11/16	1/2	1 1/4
4	1(Std.)	1	7/8-14	3/4-16	1 1/8	1.499	1/2	7/8	1 7/8	15/16	1/4	3/4
	2	2 1/2	2 1/4-12	1 7/8-12	3	3.124	1	2 1/16	4 5/8	2 3/8	5/8	1 5/8
	3	1 3/8	1 1/4-12	1-14	1 5/8	1.999	5/8	1 1/8	2 5/8	1 5/16	3/8	1
	4	1 3/4	1 1/2-12	1 1/4-12	2	2.374	3/4	1 1/2	3 1/4	1 11/16	1/2	1 1/4
	5	2	1 3/4-12	1 1/2-12	2 1/4	2.624	7/8	1 11/16	3 5/8	1 15/16	1/2	1 3/8
5	1(Std.)	1	7/8-14	3/4-16	1 1/8	1.499	1/2	7/8	1 7/8	15/16	1/4	3/4
	2	3 1/2	3 1/4-12	2 1/2-12	3 1/2	4.249	1	3	5 1/8	3 3/8	5/8	1 5/8
	3	1 3/8	1 1/4-12	1-14	1 5/8	1.999	5/8	1 1/8	2 5/8	1 5/16	3/8	1
	4	1 3/4	1 1/2-12	1 1/4-12	2	2.374	3/4	1 1/2	3 1/4	1 11/16	1/2	1 1/4
	5	2	1 3/4-12	1 1/2-12	2 1/4	2.624	7/8	1 11/16	3 5/8	1 15/16	1/2	1 3/8
	6	2 1/2	2 1/4-12	1 7/8-12	3	3.124	1	2 1/16	4 5/8	2 3/8	5/8	1 5/8
	7	3	2 3/4-12	2 1/4-12	3 1/2	3.749	1	2 5/8	5 1/8	2 7/8	5/8	1 5/8
6	1(Std.)	1 3/8	1 1/4-12	1-14	1 5/8	1.999	5/8	1 1/8	2 1/2	1 5/16	1/4	7/8
	2	4	3 3/4-12	3-12	4	4.749	1	3 3/8	5 1/2	3 7/8	1/2	1 1/2
	3	1 3/4	1 1/2-12	1 1/4-12	2	2.374	3/4	1 1/2	3 1/8	1 11/16	3/8	1 1/8
	4	2	1 3/4-12	1 1/2-12	2 1/4	2.624	7/8	1 11/16	3 1/2	1 15/16	3/8	1 1/4
	5	2 1/2	2 1/4-12	1 7/8-12	3	3.124	1	2 1/16	4 1/2	2 3/8	1/2	1 1/2
	6	3	2 3/4-12	2 1/4-12	3 1/2	3.749	1	2 5/8	5	2 7/8	1/2	1 1/2
	7	3 1/2	3 1/4-12	2 1/2-12	3 1/2	4.249	1	3	5	3 3/8	1/2	1 1/2

Table 3 — Envelope and Mounting Dimensions

Bore	Rod No.	Y	Add Stroke XA	XE	ZA	ZE
1	1(Std.)	1 15/16	5 5/16*	•	5 5/8*	•
	2	1 15/16	*	•	*	•
1 1/2	1(Std.)	1 15/16	5 5/8	5 3/8	6	5 5/8
	2	2 5/16	6	5 3/4	6 3/8	6
2	1(Std.)	1 15/16	5 5/8	5 9/16	6	5 7/8
	2	2 9/16	6 1/4	6 3/16	6 5/8	6 1/2
	3	2 5/16	6	5 15/16	6 3/8	6 1/4
2 1/2	1(Std.)	1 15/16	5 3/4	5 13/16	6 1/8	6 1/8
	2	2 13/16	6 5/8	6 11/16	7	7
	3	2 5/16	6 1/8	6 3/16	6 1/2	6 1/2
	4	2 9/16	6 3/8	6 7/16	6 3/4	6 3/4
3 1/4	1(Std.)	2 7/16	6 7/8	6 1/2	7 3/8	6 7/8
	2	3 1/16	7 1/2	7 1/8	8	7 1/2
	3	2 11/16	7 1/8	6 3/4	7 5/8	7 1/8
	4	2 15/16	7 3/8	7	7 7/8	7 3/8
4	1(Std.)	2 7/16	6 7/8	6 5/8	7 3/8	7
	2	3 5/16	7 3/4	7 1/2	8 1/4	7 7/8
	3	2 11/16	7 1/8	6 7/8	7 5/8	7 1/4
	4	2 15/16	7 3/8	7 1/8	7 7/8	7 1/2
	5	3 1/16	7 1/2	7 1/4	8	7 5/8
5	1(Std.)	2 7/16	7 1/4	6 15/16	7 7/8	7 7/16
	2	3 5/16	8 1/8	7 13/16	8 3/4	8 5/16
	3	2 11/16	7 1/2	7 3/16	8 1/8	7 11/16
	4	2 15/16	7 3/4	7 7/16	8 3/8	7 15/16
	5	3 1/16	7 7/8	7 9/16	8 1/2	8 1/16
	6	3 5/16	8 1/8	7 13/16	8 3/4	8 5/16
	7	3 5/16	8 1/8	7 13/16	8 3/4	8 5/16
6	1(Std.)	2 13/16	8	7 5/8	8 5/8	8 1/8
	2	3 7/16	8 5/8	8 1/4	9 1/4	8 3/4
	3	3 1/16	8 1/4	7 7/8	8 7/8	8 3/8
	4	3 3/16	8 3/8	8	9	8 1/2
	5	3 7/16	8 5/8	8 1/4	9 1/4	8 3/4
	6	3 7/16	8 5/8	8 1/4	9 1/4	8 3/4
	7	3 7/16	8 5/8	8 1/4	9 1/4	8 3/4

* Mounting style CB available in 1" bore for rod No. 1 only.
• Mounting style G not available in 1" bore.
Caution: When using mounting styles CB and G, check clearance between mounting members and rod attachment or accessory. If necessary, specify longer rod extension to avoid interference with mounting members.

Head Trunnion
Style D
(NFPA Style MT1)

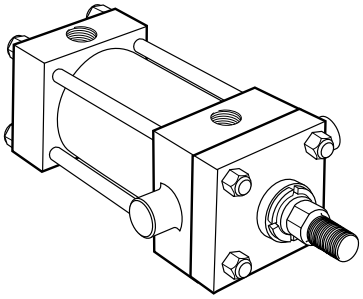

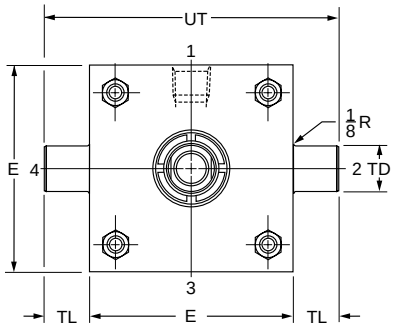

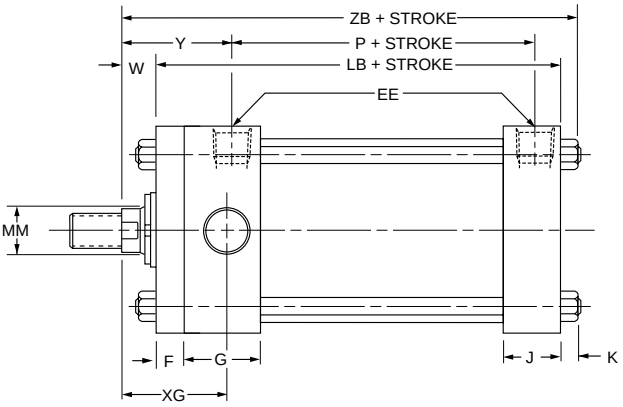

Cap Trunnion
Style DB
(NFPA Style MT2)

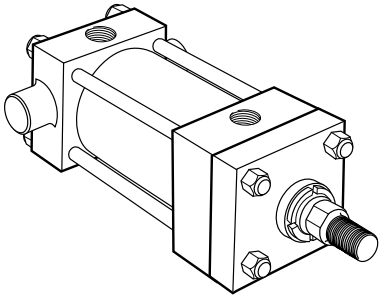

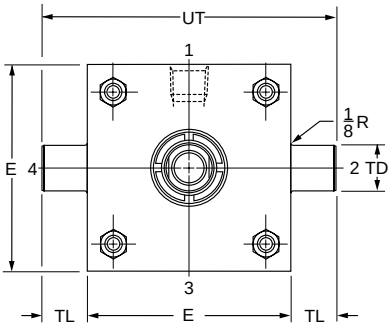

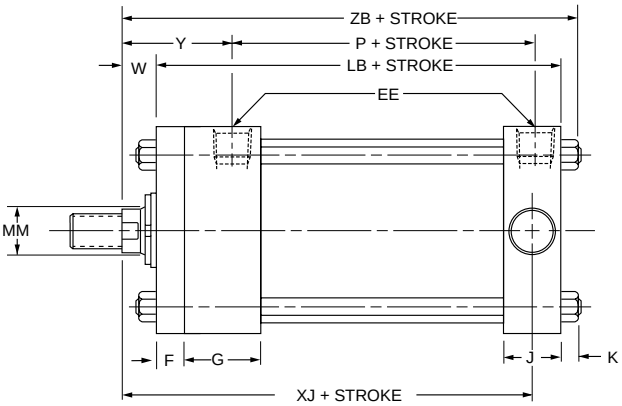

Intermediate Fixed Trunnion
Style DD
(NFPA Style MT4)

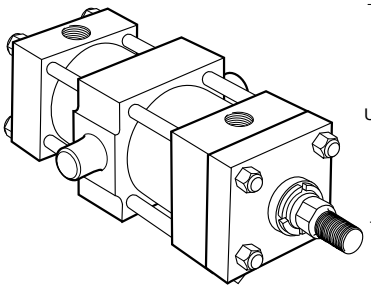

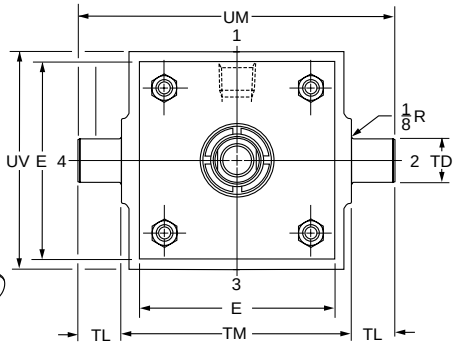

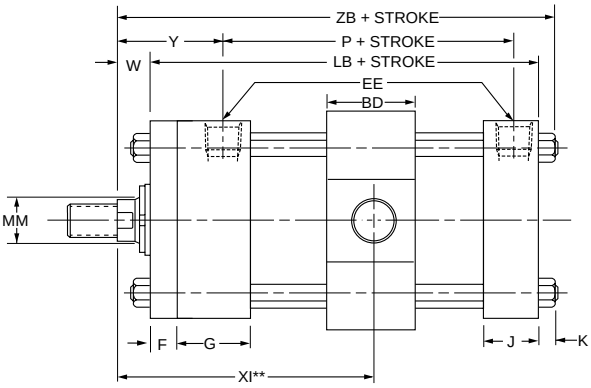

Rod End Dimensions — see table 2

Thread Style 4
(NFPA Style SM)
Small Male

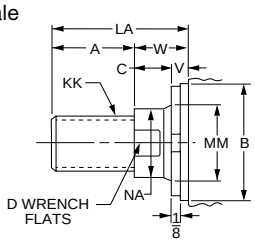

Thread Style 8
(NFPA Style IM)
Intermediate Male

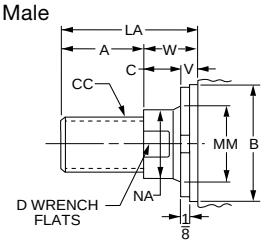

Thread Style 9
(NFPA Style SF)
Small Female

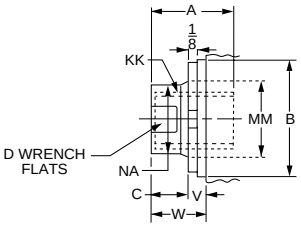

A high strength rod end stud is supplied on thread style 4 through 2" diameter rods and on thread style 8 through 1 3/8" diameter rods. Larger sizes or special rod ends are cut threads. Style 4 rod ends are recommended where the workpiece is secured against the rod shoulder. When the workpiece is not shouldered, style 4 rod ends are recommended through 2" piston rod diameters and style 8 rod ends are recommended on larger diameters. Use style 9 for applications where female rod end threads are required. If rod end is not specified, style 4 will be supplied.

"Special" Thread Style 3
Special thread, extension, rod eye, blank, etc., are also available.

To order, specify "Style 3" and give desired dimensions for CC or KK, A and LA. If otherwise special, furnish dimensioned sketch.

For additional information – call your local Parker Cylinder Distributor.

800.696-6165 www.comoso.com

Table 1—Envelope and Mounting Dimensions

Bore	BD	E	EE NPTF	F	G	J	K	+.000 TD -.001	TL	TM	UM	UT	UV	Add Stroke LB	Add Stroke P	Style DD Min. Stroke
1*	•	■	1/4	3/8	1 1/2	1	3/16	.750•	3/4•	•	•	3	•	3 7/8	2 1/8	•
1 1/2	1 1/4	2	3/8**	3/8	1 1/2	1	1/4	1.000	1	2 1/2	4 1/2	4	2 1/2	4	2 1/4	1/4
2	1 1/2	2 1/2	3/8**	3/8	1 1/2	1	5/16	1.000	1	3	5	4 1/2	3	4	2 1/4	1/2
2 1/2	1 1/2	3	3/8**	3/8	1 1/2	1	5/16	1.000	1	3 1/2	5 1/2	5	3 1/2	4 1/8	2 3/8	3/8
3 1/4	2	3 3/4	1/2	5/8	1 3/4	1 1/4	3/8	1.000	1	4 1/2	6 1/2	5 3/4	4 1/4	4 7/8	2 5/8	7/8
4	2	4 1/2	1/2	5/8	1 3/4	1 1/4	3/8	1.000	1	5 1/4	7 1/4	6 1/2	5	4 7/8	2 5/8	7/8
5	2	5 1/2	1/2	5/8	1 3/4	1 1/4	7/16	1.000	1	6 1/4	8 1/4	7 1/2	6	5 1/8	2 7/8	5/8
6	2 1/2	6 1/2	3/4	3/4	2	1 1/2	7/16	1.375	1 3/8	7 5/8	10 3/8	9 1/4	7	5 3/4	3 1/8	1 1/8

* Cushions not available on 1" bore.
** On 1", 1 1/2", 2" and 2 1/2" bore sizes, the head-end (only) pipe thread is not full depth on cylinders with No. 2 rods. Minimum of three full threads available.
• Mounting style not available in 1" bore.
■1" bore head dimension is 1 3/4" x 1 1/2". See page B20.

Table 2—Rod Dimensions

Bore	Rod No.	Rod Dia. MM	Thread Style 8 CC	Thread Style 4 & 9 KK	Rod Extensions and Pilot Dimensions A	+.000 -.002 B	C	D	LA	NA	V	W
1	1(Std.)	1/2	7/16-20	5/16-24	5/8	.999	3/8	3/8	1 1/4	7/16	1/4	5/8
	2	5/8	1/2-20	7/16-20	3/4	1.124	3/8	1/2	1 3/8	9/16	1/4	5/8
1 1/2	1(Std.)	5/8	1/2-20	7/16-20	3/4	1.124	3/8	1/2	1 3/8	9/16	1/4	5/8
	2	1	7/8-14	3/4-16	1 1/8	1.499	1/2	7/8	2 1/8	15/16	1/2	1
2	1(Std.)	5/8	1/2-20	7/16-20	3/4	1.124	3/8	1/2	1 3/8	9/16	1/4	5/8
	2	1 3/8	1 1/4-12	1-14	1 5/8	1.999	5/8	1 1/8	2 7/8	1 5/16	5/8	1 1/4
	3	1	7/8-14	3/4-16	1 1/8	1.499	1/2	7/8	2 1/8	15/16	1/2	1
2 1/2	1(Std.)	5/8	1/2-20	7/16-20	3/4	1.124	3/8	1/2	1 3/8	9/16	1/4	5/8
	2	1 3/4	1 1/2-12	1 1/4-12	2	2.374	3/4	1 1/2	3 1/2	1 11/16	3/4	1 1/2
	3	1	7/8-14	3/4-16	1 1/8	1.499	1/2	7/8	2 1/8	15/16	1/2	1
	4	1 3/8	1 1/4-12	1-14	1 5/8	1.999	5/8	1 1/8	2 7/8	1 5/16	5/8	1 1/4
3 1/4	1(Std.)	1	7/8-14	3/4-16	1 1/8	1.499	1/2	7/8	1 7/8	15/16	1/4	3/4
	2	2	1 3/4-12	1 1/2-12	2 1/4	2.624	7/8	1 11/16	3 5/8	1 15/16	1/2	1 3/8
	3	1 3/8	1 1/4-12	1-14	1 5/8	1.999	5/8	1 1/8	2 5/8	1 5/16	3/8	1
	4	1 3/4	1 1/2-12	1 1/4-12	2	2.374	3/4	1 1/2	3 1/4	1 11/16	1/2	1 1/4
4	1(Std.)	1	7/8-14	3/4-16	1 1/8	1.499	1/2	7/8	1 7/8	15/16	1/4	3/4
	2	2 1/2	2 1/4-12	1 7/8-12	3	3.124	1	2 1/16	4 5/8	2 3/8	5/8	1 5/8
	3	1 3/8	1 1/4-12	1-14	1 5/8	1.999	5/8	1 1/8	2 5/8	1 5/16	3/8	1
	4	1 3/4	1 1/2-12	1 1/4-12	2	2.374	3/4	1 1/2	3 1/4	1 11/16	1/2	1 1/4
	5	2	1 3/4-12	1 1/2-12	2 1/4	2.624	7/8	1 11/16	3 5/8	1 15/16	1/2	1 3/8
5	1(Std.)	1	7/8-14	3/4-16	1 1/8	1.499	1/2	7/8	1 7/8	15/16	1/4	3/4
	2	3 1/2	3 1/4-12	2 1/2-12	3 1/2	4.249	1	3	5 1/8	3 3/8	5/8	1 5/8
	3	1 3/8	1 1/4-12	1-14	1 5/8	1.999	5/8	1 1/8	2 5/8	1 5/16	3/8	1
	4	1 3/4	1 1/2-12	1 1/4-12	2	2.374	3/4	1 1/2	3 1/4	1 11/16	1/2	1 1/4
	5	2	1 3/4-12	1 1/2-12	2 1/4	2.624	7/8	1 11/16	3 5/8	1 15/16	1/2	1 3/8
	6	2 1/2	2 1/4-12	1 7/8-12	3	3.124	1	2 1/16	4 5/8	2 3/8	5/8	1 5/8
	7	3	2 3/4-12	2 1/4-12	3 1/2	3.749	1	2 5/8	5 1/8	2 7/8	5/8	1 5/8
6	1(Std.)	1 3/8	1 1/4-12	1-14	1 5/8	1.999	5/8	1 1/8	2 1/2	15/16	1/4	7/8
	2	4	3 3/4-12	3-12	4	4.749	1	3 3/8	5 1/2	3 7/8	1/2	1 1/2
	3	1 3/4	1 1/2-12	1 1/4-12	2	2.374	3/4	1 1/2	3 1/8	1 11/16	3/8	1 1/8
	4	2	1 3/4-12	1 1/2-12	2 1/4	2.624	7/8	1 11/16	3 1/2	1 15/16	3/8	1 1/4
	5	2 1/2	2 1/4-12	1 7/8-12	3	3.124	1	2 1/16	4 1/2	2 3/8	1/2	1 1/2
	6	3	2 3/4-12	2 1/4-12	3 1/2	3.749	1	2 5/8	5	2 7/8	1/2	1 1/2
	7	3 1/2	3 1/4-12	2 1/2-12	3 1/2	4.249	1	3	5	3 3/8	1/2	1 1/2

Table 3 — Envelope and Mounting Dimensions

Bore	Rod No.	XG	Min.** XI	Y	Add Stroke XJ	Add Stroke ZB
1	1(Std.)	1 3/4	*	1 15/16	4	4 11/16
	2	1 3/4	*	1 15/16	4	4 11/16
1 1/2	1(Std.)	1 3/4	3 3/16	1 15/16	4 1/8	4 7/8
	2	2 1/8	3 9/16	2 5/16	4 1/2	5 1/4
2	1(Std.)	1 3/4	3 5/16	1 15/16	4 1/8	4 15/16
	2	2 3/8	3 15/16	2 9/16	4 3/4	5 9/16
	3	2 1/8	3 11/16	2 5/16	4 1/2	5 5/16
2 1/2	1(Std.)	1 3/4	3 5/16	1 15/16	4 1/4	5 1/16
	2	2 5/8	4 3/16	2 13/16	5 1/8	5 15/16
	3	2 1/8	3 11/16	2 5/16	4 5/8	5 7/16
	4	2 3/8	3 15/16	2 9/16	4 7/8	5 11/16
3 1/4	1(Std.)	2 1/4	4 3/16	2 7/16	5	6
	2	2 7/8	4 13/16	3 1/16	5 5/8	6 5/8
	3	2 1/2	4 7/16	2 11/16	5 1/4	6 1/4
	4	2 3/4	4 11/16	2 15/16	5 1/2	6 1/2
4	1(Std.)	2 1/4	4 3/16	2 7/16	5	6
	2	3 1/8	5 1/16	3 5/16	5 7/8	6 7/8
	3	2 1/2	4 7/16	2 11/16	5 1/4	6 1/4
	4	2 3/4	4 11/16	2 15/16	5 1/2	6 1/2
	5	2 7/8	4 13/16	3 1/16	5 5/8	6 5/8
5	1(Std.)	2 1/4	4 5/16	2 7/16	5 1/4	6 5/16
	2	3 1/8	5 1/16	3 5/16	6 1/8	7 3/16
	3	2 1/2	4 7/16	2 11/16	5 1/2	6 9/16
	4	2 3/4	4 11/16	2 15/16	5 3/4	6 13/16
	5	2 7/8	4 13/16	3 1/16	5 7/8	6 15/16
	6	3 1/8	5 1/16	3 5/16	6 1/8	7 3/16
	7	3 1/8	5 1/16	3 5/16	6 1/8	7 3/16
6	1(Std.)	2 5/8	4 15/16	2 13/16	5 7/8	7 1/16
	2	3 1/4	5 9/16	3 7/16	6 1/2	7 11/16
	3	2 7/8	5 3/16	3 1/16	6 1/8	7 5/16
	4	3	5 5/16	3 3/16	6 1/4	7 7/16
	5	3 1/4	5 9/16	3 7/16	6 1/2	7 11/16
	6	3 1/4	5 9/16	3 7/16	6 1/2	7 11/16
	7	3 1/4	5 9/16	3 7/16	6 1/2	7 11/16

* Mounting style DD not available in 1" bore.
**Dimension XI to be specified by customer.

Cap Fixed Clevis

Style BB
(NFPA Style MP1)

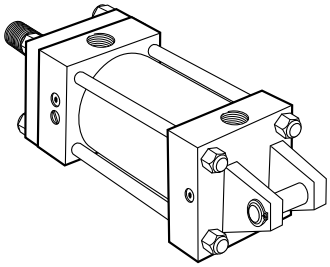

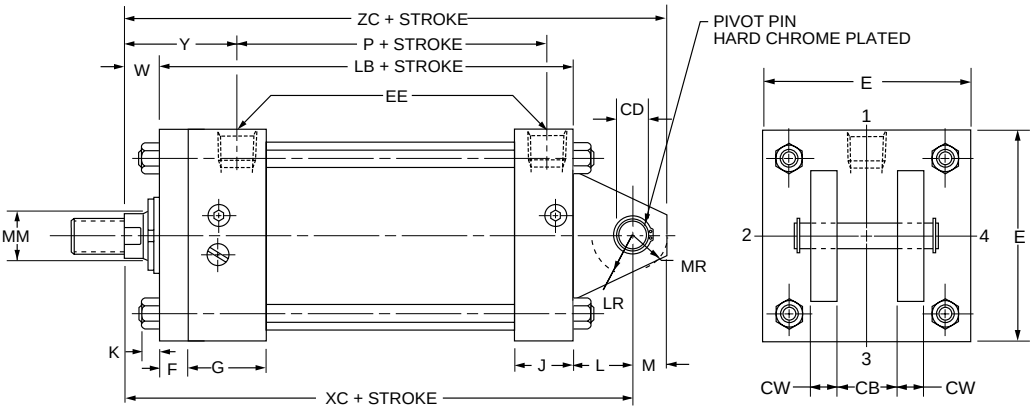

The 1", 4", 5" and 6" bore sizes have tie rod nuts at both ends as shown. Tie rods thread into cap on all other bore sizes.

Cap Detachable Clevis

Style BC
(NFPA Style MP2)

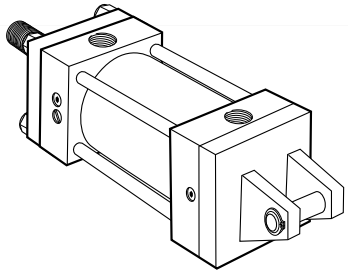

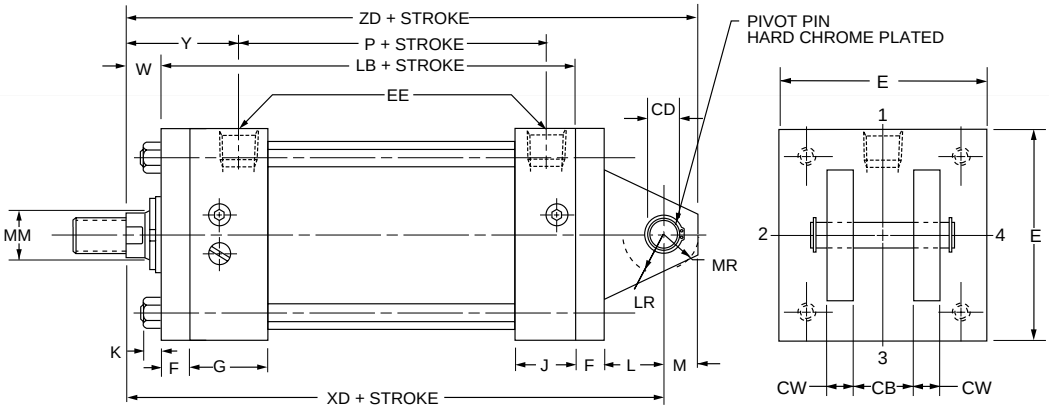

Rod End Dimensions — see table 2

Thread Style 4
(NFPA Style SM)
Small Male

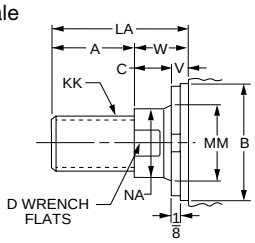

Thread Style 8
(NFPA Style IM)
Intermediate Male

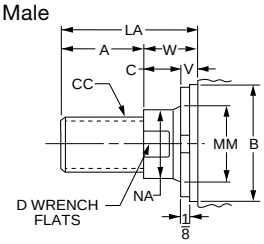

Thread Style 9
(NFPA Style SF)
Small Female

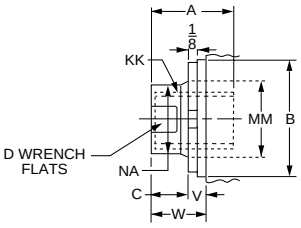

A high strength rod end stud is supplied on thread style 4 through 2" diameter rods and on thread style 8 through 1³/₈" diameter rods. Larger sizes or special rod ends are cut threads. Style 4 rod ends are recommended where the workpiece is secured against the rod shoulder. When the workpiece is not shouldered, style 4 rod ends are recommended through 2" piston rod diameters and style 8 rod ends are recommended on larger diameters. Use style 9 for applications where female rod end threads are required. If rod end is not specified, style 4 will be supplied.

"Special" Thread Style 3

Special thread, extension, rod eye, blank, etc., are also available.

To order, specify "Style 3" and give desired dimensions for CC or KK, A and LA. If otherwise special, furnish dimensioned sketch.

For additional information – call your local Parker Cylinder Distributor.

800.696-6165 www.comoso.com

Table 1—Envelope and Mounting Dimensions

Bore	CB	+.000 CD• -.002	CW	E	EE NPTF	F	G	J	K	L	LR	M	MR	Add Stroke LB	Add Stroke P
1*	†	.441†	†	■	1/4	3/8	1 1/2	1	3/16	1/2†	1/2†	7/16†	1/2†	3 7/8	2 1/8
1 1/2	3/4	.501	1/2	2	3/8**	3/8	1 1/2	1	1/4	3/4	3/4	1/2	5/8	4	2 1/4
2	3/4	.501	1/2	2 1/2	3/8**	3/8	1 1/2	1	5/16	3/4	3/4	1/2	5/8	4	2 1/4
2 1/2	3/4	.501	1/2	3	3/8**	3/8	1 1/2	1	5/16	3/4	3/4	1/2	5/8	4 1/8	2 3/8
3 1/4	1 1/4	.751	5/8	3 3/4	1/2	5/8	1 3/4	1 1/4	3/8	1 1/4	1	3/4	15/16	4 7/8	2 5/8
4	1 1/4	.751	5/8	4 1/2	1/2	5/8	1 3/4	1 1/4	3/8	1 1/4	1	3/4	15/16	4 7/8	2 5/8
5	1 1/4	.751	5/8	5 1/2	1/2	5/8	1 3/4	1 1/4	7/16	1 1/4	1	3/4	15/16	5 1/8	2 7/8
6	1 1/2	1.001	3/4	6 1/2	3/4	3/4	2	1 1/2	7/16	1 1/2	1 1/4	1	1 3/16	5 3/4	3 1/8

* Cushions not available on 1" bore.
** On 1", 1 1/2", 2" and 2 1/2" bore sizes, the head-end (only) pipe thread is not full depth on cylinders with No. 2 rods. Minimum of three full threads available.
† In 1" bore size model only, a single eye mounting, 7/16" thick, is used. Dimension CD (.441") is hole diameter – pin not supplied.
• Dimension CD is pin diameter except in 1" bore. ■1" bore head dimension is 1 3/4" x 1 1/2". See page B20.

Table 2—Rod Dimensions

Table 3 — Envelope and Mounting Dimensions

Bore	Rod No.	Rod Dia. MM	Thread Style 8 CC	Thread Style 4 & 9 KK	Rod Extensions and Pilot Dimensions A	+.000 -.002 B	C	D	LA	NA	V	W	Y	Add Stroke XC	Add Stroke XD	Add Stroke ZC	Add Stroke ZD
1	1(Std.)	1/2	7/16-20	5/16-24	5/8	.999	3/8	3/8	1 1/4	7/16	1/4	5/8	1 15/16	5	5 3/8	5 7/16	5 13/16
	2	5/8	1/2-20	7/16-20	3/4	1.124	3/8	1/2	1 3/8	9/16	1/4	5/8	1 15/16	5	5 3/8	5 7/16	5 13/16
1 1/2	1(Std.)	5/8	1/2-20	7/16-20	3/4	1.124	3/8	1/2	1 3/8	9/16	1/4	5/8	1 15/16	5 3/8	5 3/4	5 7/8	6 1/4
	2	1	7/8-14	3/4-16	1 1/8	1.499	1/2	7/8	2 1/8	15/16	1/2	1	2 5/16	5 3/4	6 1/8	6 1/4	6 5/8
2	1(Std.)	5/8	1/2-20	7/16-20	3/4	1.124	3/8	1/2	1 3/8	9/16	1/4	5/8	1 15/16	5 3/8	5 3/4	5 7/8	6 1/4
	2	1 3/8	1 1/4-12	1-14	1 5/8	1.999	5/8	1 1/8	2 7/8	1 5/16	5/8	1 1/4	2 9/16	6	6 3/8	6 1/2	6 7/8
	3	1	7/8-14	3/4-16	1 1/8	1.499	1/2	7/8	2 1/8	15/16	1/2	1	2 5/16	5 3/4	6 1/8	6 1/4	6 5/8
2 1/2	1(Std.)	5/8	1/2-20	7/16-20	3/4	1.124	3/8	1/2	1 3/8	9/16	1/4	5/8	1 15/16	5 1/2	5 7/8	6	6 3/8
	2	1 3/4	1 1/2-12	1 1/4-12	2	2.374	3/4	1 1/2	3 1/2	1 11/16	3/4	1 1/2	2 13/16	6 3/8	6 3/4	6 7/8	7 1/4
	3	1	7/8-14	3/4-16	1 1/8	1.499	1/2	7/8	2 1/8	15/16	1/2	1	2 5/16	5 7/8	6 1/4	6 3/8	6 3/4
	4	1 3/8	1 1/4-12	1-14	1 5/8	1.999	5/8	1 1/8	2 7/8	1 5/16	5/8	1 1/4	2 9/16	6 1/8	6 1/2	6 5/8	7
3 1/4	1(Std.)	1	7/8-14	3/4-16	1 1/8	1.499	1/2	7/8	1 7/8	15/16	1/4	3/4	2 7/16	6 7/8	7 1/2	7 5/8	8 1/4
	2	2	1 3/4-12	1 1/2-12	2 1/4	2.624	7/8	1 11/16	3 5/8	1 15/16	1/2	1 3/8	3 1/16	7 1/2	8 1/8	8 1/4	8 7/8
	3	1 3/8	1 1/4-12	1-14	1 5/8	1.999	5/8	1 1/8	2 5/8	1 5/16	3/8	1	2 11/16	7 1/8	7 3/4	7 7/8	8 1/2
	4	1 3/4	1 1/2-12	1 1/4-12	2	2.374	3/4	1 1/2	3 1/4	1 11/16	1/2	1 1/4	2 15/16	7 3/8	8	8 1/8	8 3/4
4	1(Std.)	1	7/8-14	3/4-16	1 1/8	1.499	1/2	7/8	1 7/8	15/16	1/4	3/4	2 7/16	6 7/8	7 1/2	7 5/8	8 1/4
	2	2 1/2	2 1/4-12	1 7/8-12	3	3.124	1	2 1/16	4 5/8	2 3/8	5/8	1 5/8	3 5/16	7 3/4	8 3/8	8 1/2	9 1/8
	3	1 3/8	1 1/4-12	1-14	1 5/8	1.999	5/8	1 1/8	2 5/8	1 5/16	3/8	1	2 11/16	7 1/8	7 3/4	7 7/8	8 1/2
	4	1 3/4	1 1/2-12	1 1/4-12	2	2.374	3/4	1 1/2	3 1/4	1 11/16	1/2	1 1/4	2 15/16	7 3/8	8	8 1/8	8 3/4
	5	2	1 3/4-12	1 1/2-12	2 1/4	2.624	7/8	1 11/16	3 5/8	1 15/16	1/2	1 3/8	3 1/16	7 1/2	8 1/8	8 1/4	8 7/8
5	1(Std.)	1	7/8-14	3/4-16	1 1/8	1.499	1/2	7/8	1 7/8	15/16	1/4	3/4	2 7/16	7 1/8	7 3/4	7 7/8	8 1/2
	2	3 1/2	3 1/4-12	2 1/2-12	3 1/2	4.249	1	3	5 1/8	3 3/8	5/8	1 5/8	3 5/16	8	8 5/8	8 3/4	9 3/8
	3	1 3/8	1 1/4-12	1-14	1 5/8	1.999	5/8	1 1/8	2 5/8	1 5/16	3/8	1	2 11/16	7 3/8	8	8 1/8	8 3/4
	4	1 3/4	1 1/2-12	1 1/4-12	2	2.374	3/4	1 1/2	3 1/4	1 11/16	1/2	1 1/4	2 15/16	7 5/8	8 1/4	8 3/8	9
	5	2	1 3/4-12	1 1/2-12	2 1/4	2.624	7/8	1 11/16	3 5/8	1 15/16	1/2	1 3/8	3 1/16	7 3/4	8 3/8	8 1/2	9 1/8
	6	2 1/2	2 1/4-12	1 7/8-12	3	3.124	1	2 1/16	4 5/8	2 3/8	5/8	1 5/8	3 5/16	8	8 5/8	8 3/4	9 3/8
	7	3	2 3/4-12	2 1/4-12	3 1/2	3.749	1	2 5/8	5 1/8	2 7/8	5/8	1 5/8	3 5/16	8	8 5/8	8 3/4	9 3/8
6	1(Std.)	1 3/8	1 1/4-12	1-14	1 5/8	1.999	5/8	1 1/8	2 1/2	1 5/16	1/4	7/8	2 13/16	8 1/8	8 7/8	9 1/8	9 7/8
	2	4	3 3/4-12	3-12	4	4.749	1	3 3/8	5 1/2	3 7/8	1/2	1 1/2	3 7/16	8 3/4	9 1/2	9 3/4	10 1/2
	3	1 3/4	1 1/2-12	1 1/4-12	2	2.374	3/4	1 1/2	3 1/8	1 11/16	3/8	1 1/8	3 1/16	8 3/8	9 1/8	9 3/8	10 1/8
	4	2	1 3/4-12	1 1/2-12	2 1/4	2.624	7/8	1 11/16	3 1/2	1 15/16	3/8	1 1/4	3 3/16	8 1/2	9 1/4	9 1/2	10 1/4
	5	2 1/2	2 1/4-12	1 7/8-12	3	3.124	1	2 1/16	4 1/2	2 3/8	1/2	1 1/2	3 7/16	8 3/4	9 1/2	9 3/4	10 1/2
	6	3	2 3/4-12	2 1/4-12	3 1/2	3.749	1	2 5/8	5	2 7/8	1/2	1 1/2	3 7/16	8 3/4	9 1/2	9 3/4	10 1/2
	7	3 1/2	3 1/4-12	2 1/2-12	3 1/2	4.249	1	3	5	3 3/8	1/2	1 1/2	3 7/16	8 3/4	9 1/2	9 3/4	10 1/2

Tie Rods Extended
Style TB
(NFPA Style MX3)

Style TB (NFPA MX3) Head Tie Rods Extended, illustrated: Style TC (NFPA MX2), Cap Tie Rods Extended; and Style TD (NFPA MX1), Both Ends Tie Rods Extended are also available. All "T" styles can be dimensioned from Style TB drawing at right.

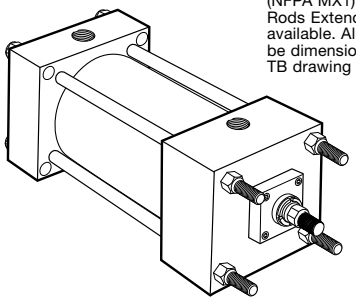

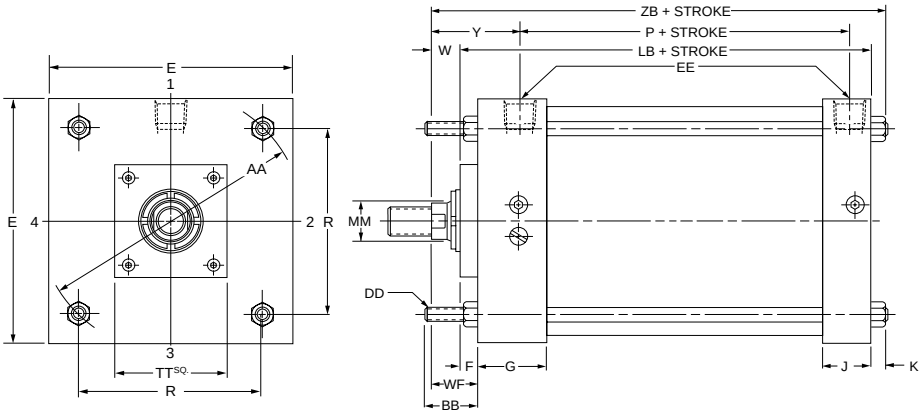

Head Square Flange
Style JB
(NFPA Style ME3)

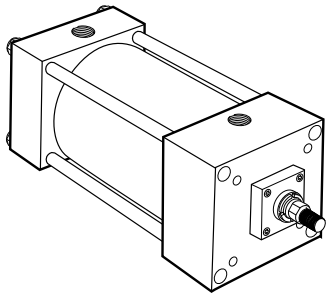

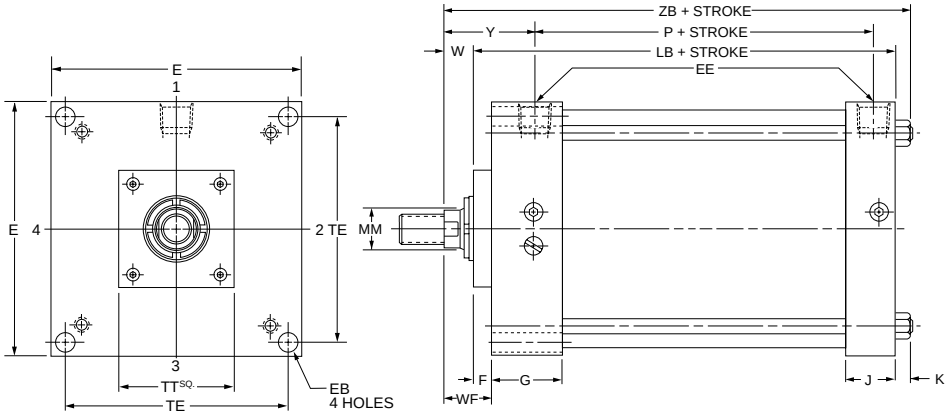

Cap Square Flange
Style HB
(NFPA Style ME4)

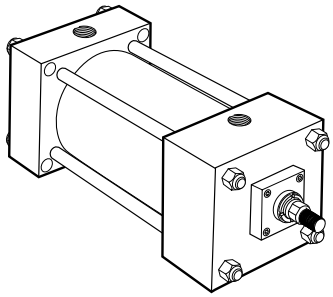

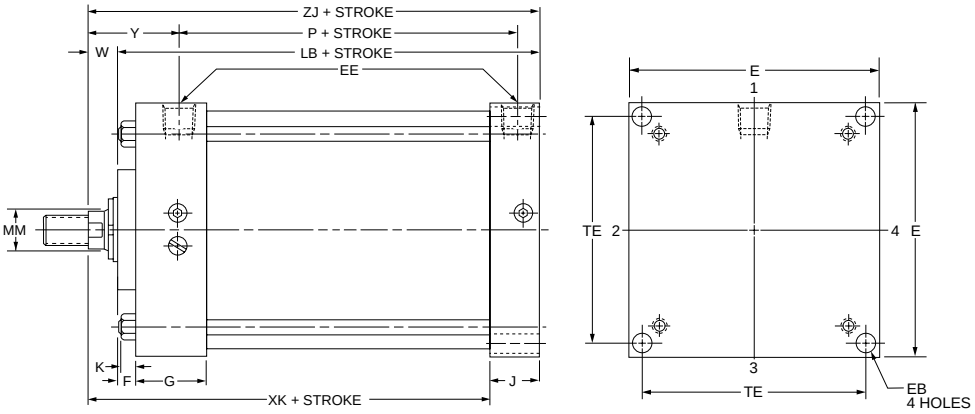

Rod End Dimensions — see table 2

Thread Style 4
(NFPA Style SM)
Small Male

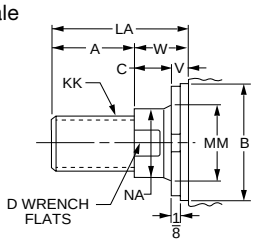

Thread Style 8
(NFPA Style IM)
Intermediate Male

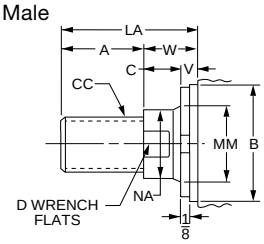

Thread Style 9
(NFPA Style SF)
Small Female

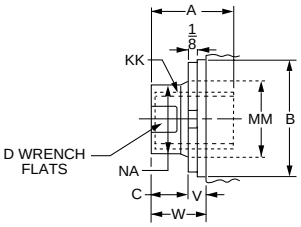

A high strength rod end stud is supplied on thread style 4 through 2" diameter rods and on thread style 8 through 1 3/8" diameter rods. Larger sizes or special rod ends are cut threads. Style 4 rod ends are recommended where the workpiece is secured against the rod shoulder. When the workpiece is not shouldered, style 4 rod ends are recommended through 2" piston rod diameters and style 8 rod ends are recommended on larger diameters. Use style 9 for applications where female rod end threads are required. If rod end is not specified, style 4 will be supplied.

"Special" Thread Style 3

Special thread, extension, rod eye, blank, etc., are also available.

To order, specify "Style 3" and give desired dimensions for CC or KK, A and LA. If otherwise special, furnish dimensional sketch.

For additional information – call your local Parker Cylinder Distributor.

Series 2A
Heavy Duty Air Cylinders

Side Lug, Side Tapped, Cap Trunnion, Head Trunnion, Cap Fixed Clevis Mountings 7" Bore Size

Side Lug
Style C
(NFPA Style MS2)

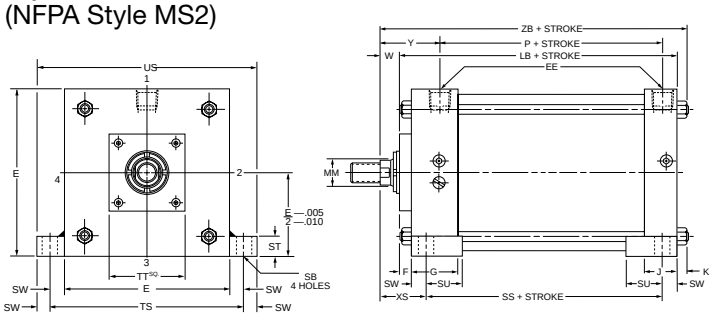

Side Tapped
Style F
(NFPA Style MS4)

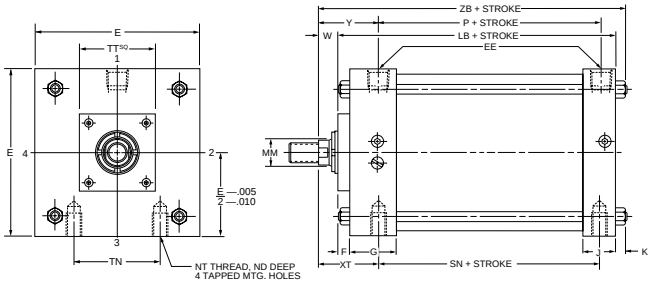

Cap Trunnion
Style DB
(NFPA Style MT2)

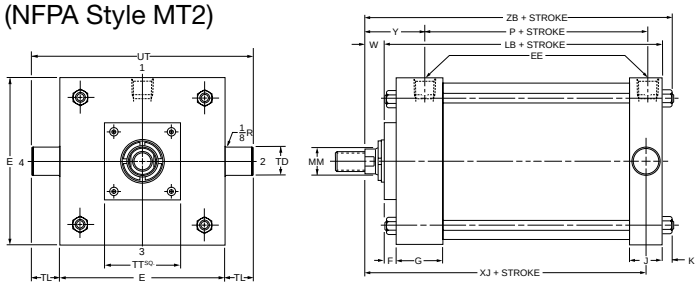

Head Trunnion
Style D
(NFPA Style MT1)

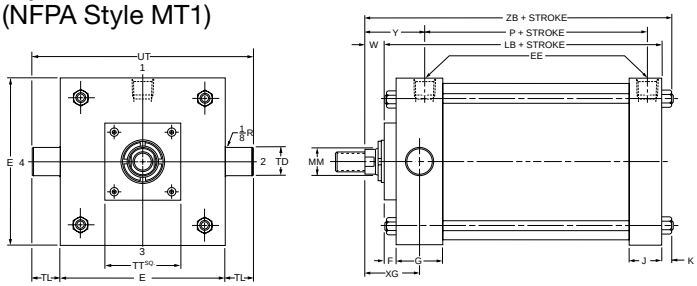

Cap Fixed Clevis
Style BB
(NFPA Style MP1)

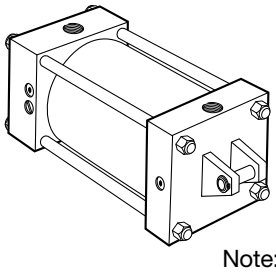

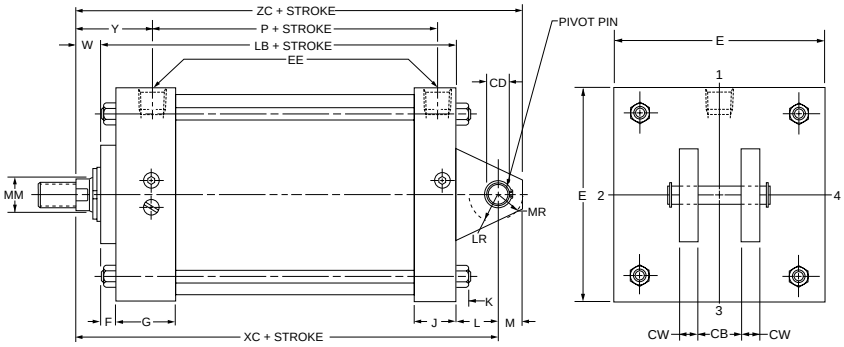

Note: Other mounting styles and double rod end cylinders are available on request. Consult factory for details.

Table 1—Envelope and Mounting Dimensions

Bore	AA	BB	CB	+.000 CD -.002	CW	DD	E	EB	EE	F	G	J	K	L	LR	M	MR	ND	NT	R	SB	ST	SU	SW	+.000 TD -.001	TE	TL	TN	TS	US	UT	Add Stroke LB	P	SN	SS
7	8.1	2 5/16	1 1/2	1.001	3/4	5/8-18	7 1/2	9/16	3/4	3/4	2	1 1/2	9/16	1 1/2	1 1/4	1	1 3/16	1 1/8	3/4-10	5.73	13/16	1	1 9/16	11/16	1.375	6 3/4	1 3/8	3 1/2	8 7/8	10 1/4	10 1/4	5 7/8	3 1/4	3 1/4	3 3/4

Table 2—Rod Dimensions

Bore	Rod No.	Rod Dia. MM	Thread: Style 8 CC	Thread: Style 4 & 9 KK	Rod Extensions and Pilot Dimensions: A	+.000 -.002 B	C	D	LA	NA	V	W	WF	Y
7	1	1 3/8	1 1/4-12	1-14	1 5/8	1.999	5/8	1 1/8	2 1/2	1 5/16	1/4	7/8	1 5/8	2 13/16
	3	1 3/4	1 1/2-12	1 1/4-12	2	2.374	3/4	1 1/2	3 1/8	1 11/16	3/8	1 1/8	1 7/8	3 1/16
	4	2	1 3/4-12	1 1/2-12	2 1/4	2.624	7/8	1 11/16	3 1/2	1 15/16	3/8	1 1/4	2	3 3/16

Table 3 — Envelope and Mounting Dimensions

Bore	TT	XG	XS	XT	Add Stroke: XC	XJ	XK	ZB	ZC	ZJ
7	4	2 5/8	2 5/16	2 13/16	8 1/4	6	5 1/4	7 5/16	9 1/4	6 3/4
	4	2 7/8	2 9/16	3 1/16	8 1/2	6 1/4	5 1/2	7 9/16	9 1/2	7
	4	3	2 11/16	3 3/16	8 5/8	6 3/8	5 5/8	7 11/16	9 5/8	7 1/8

Tie Rods Extended
Style TB
(NFPA Style MX3)

Style TB (NFPA MX3) Head Tie Rods Extended, illustrated: Style TC (NFPA MX2), Cap Tie Rods Extended; and Style TD (NFPA MX1), Both Ends Tie Rods Extended are also available. All "T" styles can be dimensioned from Style TB drawing at right.

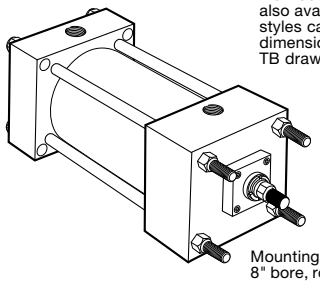

Mounting styles TB & TD not offered in 8" bore, rod codes #2, 9 and 0.

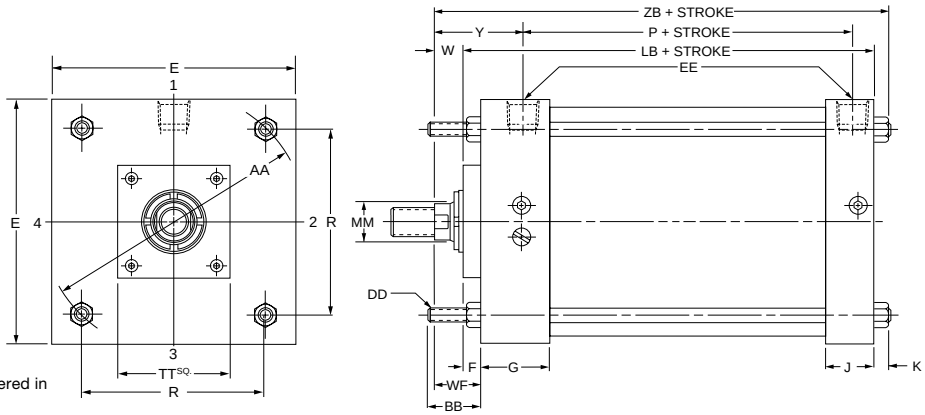

Head Square Flange
Style JB
(NFPA Style ME3)

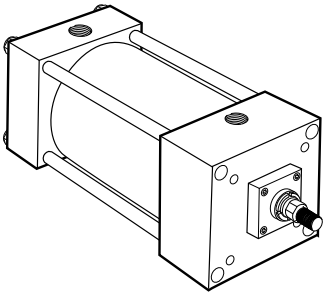

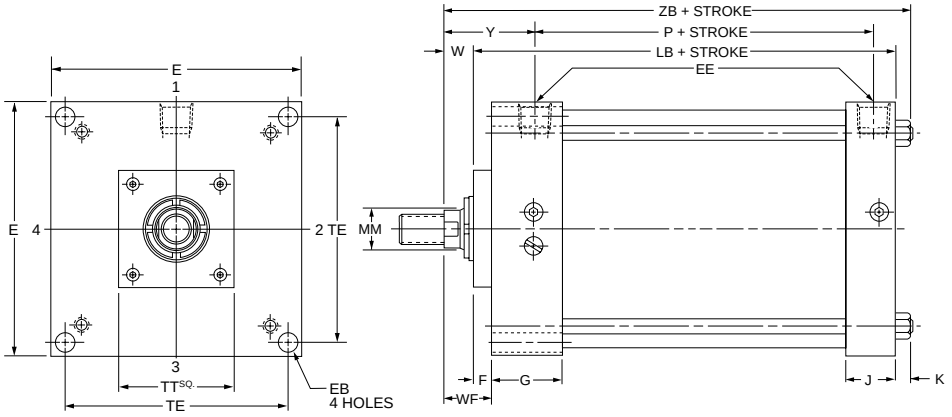

Cap Square Flange
Style HB
(NFPA Style ME4)

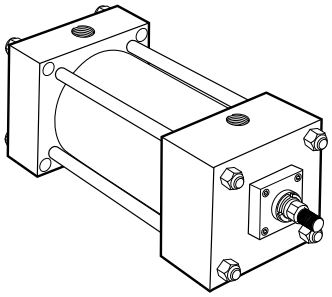

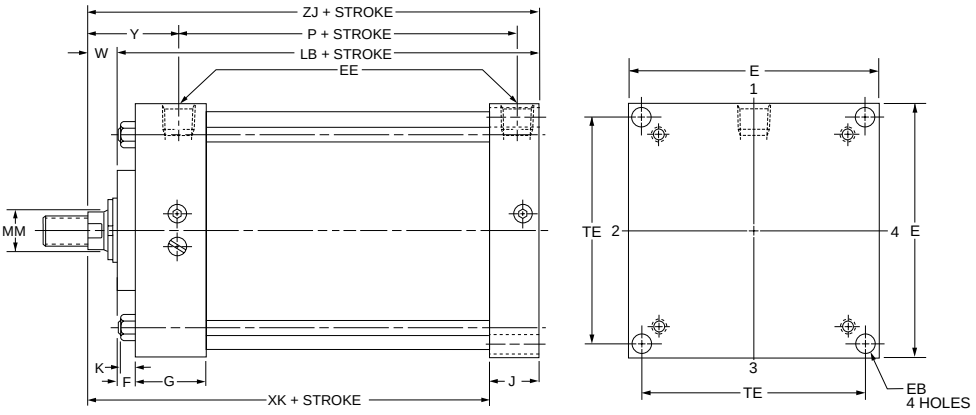

Rod End Dimensions — see table 2

Thread Style 4
(NFPA Style SM)
Small Male

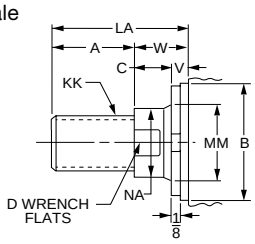

Thread Style 8
(NFPA Style IM)
Intermediate Male

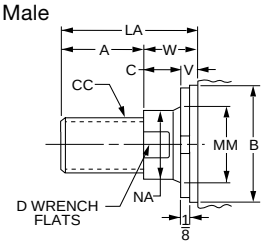

Thread Style 9
(NFPA Style SF)
Small Female

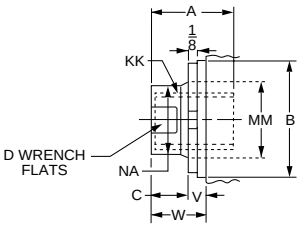

"Special" Thread Style 3
Special thread, extension, rod eye, blank, etc., are also available.

To order, specify "Style 3" and give desired dimensions for CC or KK, A and LA. If otherwise special, furnish dimensional sketch.

A high strength rod end stud is supplied on thread style 4 through 2" diameter rods and on thread style 8 through 1³/₈" diameter rods. Larger sizes or special rod ends are cut threads. Style 4 rod ends are recommended where the workpiece is secured against the rod shoulder. When the workpiece is not shouldered, style 4 rod ends are recommended through 2" piston rod diameters and style 8 rod ends are recommended on larger diameters. Use style 9 for applications where female rod end threads are required. If rod end is not specified, style 4 will be supplied.

For additional information – call your local Parker Cylinder Distributor.

Table 1—Envelope and Mounting Dimensions

Bore	AA	BB	DD	E	EB	EE NPTF	F	G	J	K	R	TE	Add Stroke LB	Add Stroke P
8	9.1	2 5/16	5/8-18	8 1/2	11/16	3/4	3/4	2	1 1/2	9/16	6.44	7.57	5 7/8	3 1/4
10	11.2	2 11/16	3/4-16	10 5/8	13/16	1	3/4	2 1/4	2	11/16	7.92	9.40	7 1/8	4 1/8
12	13.3	2 11/16	3/4-16	12 3/4	13/16	1	3/4	2 1/4	2	11/16	9.40	11.10	7 5/8	4 5/8
14	15.4	3 3/16	7/8-14	14 3/4	15/16	1 1/4	3/4	2 3/4	2 1/4	3/4	10.90	12.87	8 7/8	5 1/2

A

Table 2—Rod Dimensions

Bore	Rod No.	Rod Dia. MM	Thread Style 8 CC	Thread Style 4 & 9 KK	Rod Extensions and Pilot Dimensions A	+.000 -.002 B	C	D	LA	NA	V	W
8	1(Std.)	1 3/8	1 1/4-12	1-14	1 5/8	1.999	5/8	1 1/8	2 1/2	1 5/16	1/4	7/8
	2	5 1/2	5 1/4-12	4-12	5 1/2	6.249	1	4 5/8	7	5 3/8	1/2	1 1/2
	3	1 3/4	1 1/2-12	1 1/4-12	2	2.374	3/4	1 1/2	3 1/8	1 11/16	3/8	1 1/8
	4	2	1 3/4-12	1 1/2-12	2 1/4	2.624	7/8	1 11/16	3 1/2	1 15/16	3/8	1 1/4
	5	2 1/2	2 1/4-12	1 7/8-12	3	3.124	1	2 1/16	4 1/2	2 3/8	1/2	1 1/2
	6	3	2 3/4-12	2 1/4-12	3 1/2	3.749	1	2 5/8	5	2 7/8	1/2	1 1/2
	7	3 1/2	3 1/4-12	2 1/2-12	3 1/2	4.249	1	3	5	3 3/8	1/2	1 1/2
	8	4	3 3/4-12	3-12	4	4.749	1	3 3/8	5 1/2	3 7/8	1/2	1 1/2
	9	4 1/2	4 1/4-12	3 1/4-12	4 1/2	5.249	1	3 7/8	6	4 3/8	1/2	1 1/2
	0	5	4 3/4-12	3 1/2-12	5	5.749	1	4 1/4	6 1/2	4 7/8	1/2	1 1/2
10	1(Std.)	1 3/4	1 1/2-12	1 1/4-12	2	2.374	3/4	1 1/2	3 1/8	1 11/16	3/8	1 1/8
	3	2	1 3/4-12	1 1/2-12	2 1/4	2.624	7/8	1 11/16	3 1/2	1 15/16	3/8	1 1/4
	4	2 1/2	2 1/4-12	1 7/8-12	3	3.124	1	2 1/16	4 1/2	2 3/8	1/2	1 1/2
	5	3	2 3/4-12	2 1/4-12	3 1/2	3.749	1	2 5/8	5	2 7/8	1/2	1 1/2
	6	3 1/2	3 1/4-12	2 1/2-12	3 1/2	4.249	1	3	5	3 3/8	1/2	1 1/2
	7	4	3 3/4-12	3-12	4	4.749	1	3 3/8	5 1/2	3 7/8	1/2	1 1/2
	8	4 1/2	4 1/4-12	3 1/4-12	4 1/2	5.249	1	3 7/8	6	4 3/8	1/2	1 1/2
	9	5	4 3/4-12	3 1/2-12	5	5.749	1	4 1/4	6 1/2	4 7/8	1/2	1 1/2
	0	5 1/2	5 1/4-12	4-12	5 1/2	6.249	1	4 5/8	7	5 3/8	1/2	1 1/2
12	1(Std.)	2	1 3/4-12	1 1/2-12	2 1/4	2.624	7/8	1 11/16	3 1/2	1 15/16	3/8	1 1/4
	3	2 1/2	2 1/4-12	1 7/8-12	3	3.124	1	2 1/16	4 1/2	2 3/8	1/2	1 1/2
	4	3	2 3/4-12	2 1/4-12	3 1/2	3.749	1	2 5/8	5	2 7/8	1/2	1 1/2
	5	3 1/2	3 1/4-12	2 1/2-12	3 1/2	4.249	1	3	5	3 3/8	1/2	1 1/2
	6	4	3 3/4-12	3-12	4	4.749	1	3 3/8	5 1/2	3 7/8	1/2	1 1/2
	7	4 1/2	4 1/4-12	3 1/4-12	4 1/2	5.249	1	3 7/8	6	4 3/8	1/2	1 1/2
	8	5	4 3/4-12	3 1/2-12	5	5.749	1	4 1/4	6 1/2	4 7/8	1/2	1 1/2
	9	5 1/2	5 1/4-12	4-12	5 1/2	6.249	1	4 5/8	7	5 3/8	1/2	1 1/2
14	1(Std.)	2 1/2	2 1/4-12	1 7/8-12	3	3.124	1	2 1/16	4 1/2	2 3/8	1/2	1 1/2
	3	3	2 3/4-12	2 1/4-12	3 1/2	3.749	1	2 5/8	5	2 7/8	1/2	1 1/2
	4	3 1/2	3 1/4-12	2 1/2-12	3 1/2	4.249	1	3	5	3 3/8	1/2	1 1/2
	5	4	3 3/4-12	3-12	4	4.749	1	3 3/8	5 1/2	3 7/8	1/2	1 1/2
	6	4 1/2	4 1/4-12	3 1/4-12	4 1/2	5.249	1	3 7/8	6	4 3/8	1/2	1 1/2
	7	5	4 3/4-12	3 1/2-12	5	5.749	1	4 1/4	6 1/2	4 7/8	1/2	1 1/2
	8	5 1/2	5 1/4-12	4-12	5 1/2	6.249	1	4 5/8	7	5 3/8	1/2	1 1/2

Table 3 — Envelope and Mounting Dimensions

Bore	Rod No.	TT	WF	Y	Add Stroke XK	Add Stroke ZB	Add Stroke ZJ
8	1(Std.)	4	1 5/8	2 13/16	5 1/4	7 5/16	6 3/4
	2	7	2 1/4	3 7/16	5 7/8	7 15/16	7 3/8
	3	4	1 7/8	3 1/16	5 1/2	7 9/16	7
	4	4	2	3 3/16	5 5/8	7 11/16	7 1/8
	5	4	2 1/4	3 7/16	5 7/8	7 15/16	7 3/8
	6	5 1/2	2 1/4	3 7/16	5 7/8	7 15/16	7 3/8
	7	5 1/2	2 1/4	3 7/16	5 7/8	7 15/16	7 3/8
	8	5 1/2	2 1/4	3 7/16	5 7/8	7 15/16	7 3/8
	9	7	2 1/4	3 7/16	5 7/8	7 15/16	7 3/8
	0	7	2 1/4	3 7/16	5 7/8	7 15/16	7 3/8
10	1(Std.)	4	1 7/8	3 1/8	6 1/4	8 15/16	8 1/4
	3	4	2	3 1/4	6 3/8	9 1/16	8 3/8
	4	4	2 1/4	3 1/2	6 5/8	9 5/16	8 5/8
	5	5 1/2	2 1/4	3 1/2	6 5/8	9 5/16	8 5/8
	6	5 1/2	2 1/4	3 1/2	6 5/8	9 5/16	8 5/8
	7	5 1/2	2 1/4	3 1/2	6 5/8	9 5/16	8 5/8
	8	7	2 1/4	3 1/2	6 5/8	9 5/16	8 5/8
	9	7	2 1/4	3 1/2	6 5/8	9 5/16	8 5/8
	0	7	2 1/4	3 1/2	6 5/8	9 5/16	8 5/8
12	1(Std.)	4	2	3 1/4	6 7/8	9 9/16	8 7/8
	3	4	2 1/4	3 1/2	7 1/8	9 13/16	9 1/8
	4	5 1/2	2 1/4	3 1/2	7 1/8	9 13/16	9 1/8
	5	5 1/2	2 1/4	3 1/2	7 1/8	9 13/16	9 1/8
	6	5 1/2	2 1/4	3 1/2	7 1/8	9 13/16	9 1/8
	7	7	2 1/4	3 1/2	7 1/8	9 13/16	9 1/8
	8	7	2 1/4	3 1/2	7 1/8	9 13/16	9 1/8
	9	7	2 1/4	3 1/2	7 1/8	9 13/16	9 1/8
14	1(Std.)	4	2 1/4	3 13/16	8 1/8	11 1/8	10 3/8
	3	5 1/2	2 1/4	3 13/16	8 1/8	11 1/8	10 3/8
	4	5 1/2	2 1/4	3 13/16	8 1/8	11 1/8	10 3/8
	5	5 1/2	2 1/4	3 13/16	8 1/8	11 1/8	10 3/8
	6	7	2 1/4	3 13/16	8 1/8	11 1/8	10 3/8
	7	7	2 1/4	3 13/16	8 1/8	11 1/8	10 3/8
	8	7	2 1/4	3 13/16	8 1/8	11 1/8	10 3/8

Side Lug
Style C
(NFPA Style MS2)

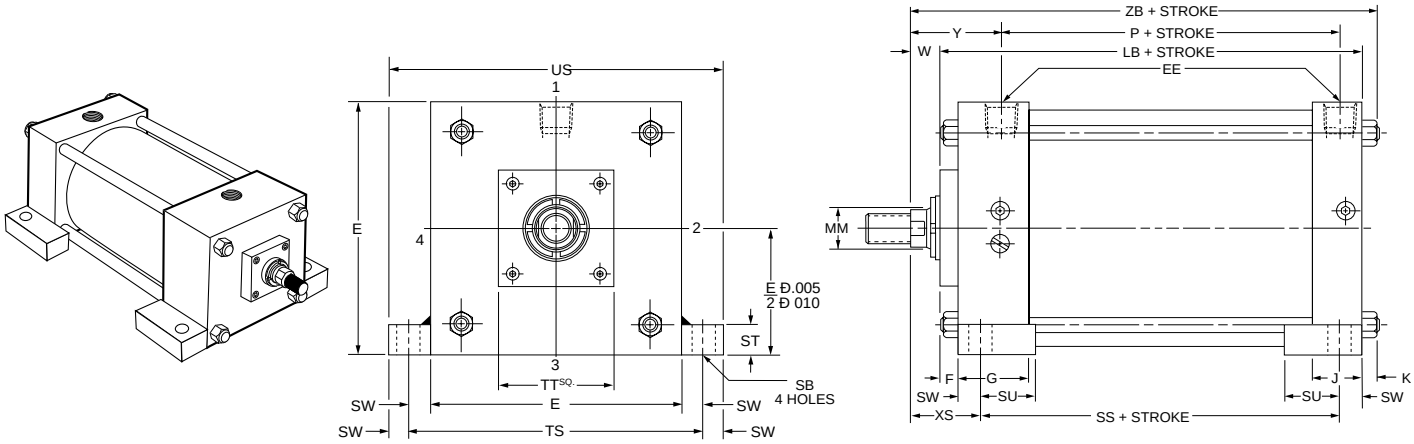

Centerline Lugs
Style E
(NFPA Style MS3)

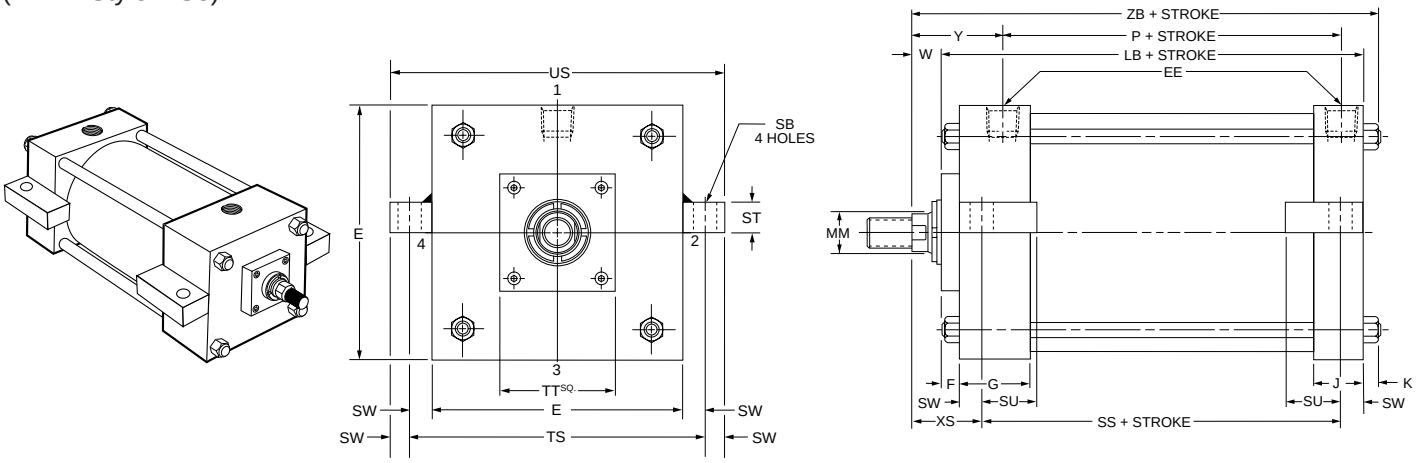

Rod End Dimensions — see table 2

Thread Style 4
(NFPA Style SM)
Small Male

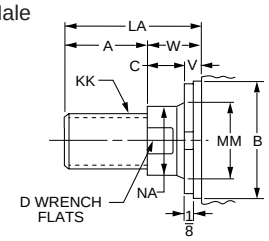

Thread Style 8
(NFPA Style IM)
Intermediate Male

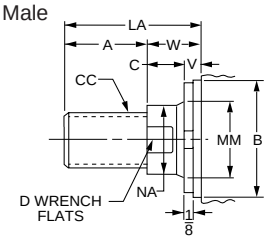

Thread Style 9
(NFPA Style SF)
Small Female

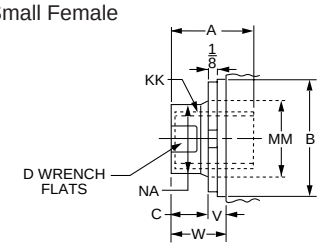

A high strength rod end stud is supplied on thread style 4 through 2" diameter rods and on thread style 8 through 1 3/8" diameter rods. Larger sizes or special rod ends are cut threads. Style 4 rod ends are recommended where the workpiece is secured against the rod shoulder. When the workpiece is not shouldered, style 4 rod ends are recommended through 2" piston rod diameters and style 8 rod ends are recommended on larger diameters. Use style 9 for applications where female rod end threads are required. If rod end is not specified, style 4 will be supplied.

"Special" Thread Style 3

Special thread, extension, rod eye, blank, etc., are also available.

To order, specify "Style 3" and give desired dimensions for CC or KK, A and LA. If otherwise special, furnish dimensional sketch.

For additional information – call your local Parker Cylinder Distributor.

800.696-6165 www.comoso.com

Table 1—Envelope and Mounting Dimensions

Bore	E	EE NPTF	F	G	J	K	SB*	ST	SU	SW	TS	US	Add Stroke LB	Add Stroke P	Add Stroke SS
8	8 1/2	3/4	3/4	2	1 1/2	9/16	13/16	1	1 9/16	11/16	9 7/8	11 1/4	5 7/8	3 1/4	3 3/4
10	10 5/8	1	3/4	2 1/4	2	11/16	1 1/16	1 1/4	2	7/8	12 3/8	14 1/8	7 1/8	4 1/8	4 5/8
12	12 3/4	1	3/4	2 1/4	2	11/16	1 1/16	1 1/4	2	7/8	14 1/2	16 1/4	7 5/8	4 5/8	5 1/8
14	14 3/4	1 1/4	3/4	2 3/4	2 1/4	3/4	1 5/16	1 1/2	2 1/2	1 1/8	17	19 1/4	8 7/8	5 1/2	5 7/8

* Upper surface spotfaced for socket head screws.

A

Table 2—Rod Dimensions

Table 3 — Envelope and Mounting Dimensions

Bore	Rod No.	Rod Dia. MM	Thread Style 8 CC	Thread Style 4 & 9 KK	Rod Extensions and Pilot Dimensions A	+.000 -.002 B	C	D	LA	NA	V	W	TT	XS	Y	Add Stroke ZB
8	1(Std.)	1 3/8	1 1/4-12	1-14	1 5/8	1.999	5/8	1 1/8	2 1/2	1 5/16	1/4	7/8	4	2 5/16	2 13/16	7 5/16
	2	5 1/2	5 1/4-12	4-12	5 1/2	6.249	1	4 5/8	7	5 3/8	1/2	1 1/2	7	2 15/16	3 7/16	7 15/16
	3	1 3/4	1 1/2-12	1 1/4-12	2	2.374	3/4	1 1/2	3 1/8	1 11/16	3/8	1 1/8	4	2 9/16	3 1/16	7 9/16
	4	2	1 3/4-12	1 1/2-12	2 1/4	2.624	7/8	1 11/16	3 1/2	1 15/16	3/8	1 1/4	4	2 11/16	3 3/16	7 11/16
	5	2 1/2	2 1/4-12	1 7/8-12	3	3.124	1	2 1/16	4 1/2	2 3/8	1/2	1 1/2	4	2 15/16	3 7/16	7 15/16
	6	3	2 3/4-12	2 1/4-12	3 1/2	3.749	1	2 5/8	5	2 7/8	1/2	1 1/2	5 1/2	2 15/16	3 7/16	7 15/16
	7	3 1/2	3 1/4-12	2 1/2-12	3 1/2	4.249	1	3	5	3 3/8	1/2	1 1/2	5 1/2	2 15/16	3 7/16	7 15/16
	8	4	3 3/4-12	3-12	4	4.749	1	3 3/8	5 1/2	3 7/8	1/2	1 1/2	5 1/2	2 15/16	3 7/16	7 15/16
	9	4 1/2	4 1/4-12	3 1/4-12	4 1/2	5.249	1	3 7/8	6	4 3/8	1/2	1 1/2	7	2 15/16	3 7/16	7 15/16
	0	5	4 3/4-12	3 1/2-12	5	5.749	1	4 1/4	6 1/2	4 7/8	1/2	1 1/2	7	2 15/16	3 7/16	7 15/16
10	1(Std.)	1 3/4	1 1/2-12	1 1/4-12	2	2.374	3/4	1 1/2	3 1/8	1 11/16	3/8	1 1/8	4	2 3/4	3 1/8	8 15/16
	3	2	1 3/4-12	1 1/2-12	2 1/4	2.624	7/8	1 11/16	3 1/2	1 15/16	3/8	1 1/4	4	2 7/8	3 1/4	9 1/16
	4	2 1/2	2 1/4-12	1 7/8-12	3	3.124	1	2 1/16	4 1/2	2 3/8	1/2	1 1/2	4	3 1/8	3 1/2	9 5/16
	5	3	2 3/4-12	2 1/4-12	3 1/2	3.749	1	2 5/8	5	2 7/8	1/2	1 1/2	5 1/2	3 1/8	3 1/2	9 5/16
	6	3 1/2	3 1/4-12	2 1/2-12	3 1/2	4.249	1	3	5	3 3/8	1/2	1 1/2	5 1/2	3 1/8	3 1/2	9 5/16
	7	4	3 3/4-12	3-12	4	4.749	1	3 3/8	5 1/2	3 7/8	1/2	1 1/2	5 1/2	3 1/8	3 1/2	9 5/16
	8	4 1/2	4 1/4-12	3 1/4-12	4 1/2	5.249	1	3 7/8	6	4 3/8	1/2	1 1/2	7	3 1/8	3 1/2	9 5/16
	9	5	4 3/4-12	3 1/2-12	5	5.749	1	4 1/4	6 1/2	4 7/8	1/2	1 1/2	7	3 1/8	3 1/2	9 5/16
	0	5 1/2	5 1/4-12	4-12	5 1/2	6.249	1	4 5/8	7	5 3/8	1/2	1 1/2	7	3 1/8	3 1/2	9 5/16
12	1(Std.)	2	1 3/4-12	1 1/2-12	2 1/4	2.624	7/8	1 11/16	3 1/2	1 15/16	3/8	1 1/4	4	2 7/8	3 1/4	9 9/16
	3	2 1/2	2 1/4-12	1 7/8-12	3	3.124	1	2 1/16	4 1/2	2 3/8	1/2	1 1/2	4	3 1/8	3 1/2	9 13/16
	4	3	2 3/4-12	2 1/4-12	3 1/2	3.749	1	2 5/8	5	2 7/8	1/2	1 1/2	5 1/2	3 1/8	3 1/2	9 13/16
	5	3 1/2	3 1/4-12	2 1/2-12	3 1/2	4.249	1	3	5	3 3/8	1/2	1 1/2	5 1/2	3 1/8	3 1/2	9 13/16
	6	4	3 3/4-12	3-12	4	4.749	1	3 3/8	5 1/2	3 7/8	1/2	1 1/2	5 1/2	3 1/8	3 1/2	9 13/16
	7	4 1/2	4 1/4-12	3 1/4-12	4 1/2	5.249	1	3 7/8	6	4 3/8	1/2	1 1/2	7	3 1/8	3 1/2	9 13/16
	8	5	4 3/4-12	3 1/2-12	5	5.749	1	4 1/4	6 1/2	4 7/8	1/2	1 1/2	7	3 1/8	3 1/2	9 13/16
	9	5 1/2	5 1/4-12	4-12	5 1/2	6.249	1	4 5/8	7	5 3/8	1/2	1 1/2	7	3 1/8	3 1/2	9 13/16
14	1(Std.)	2 1/2	2 1/4-12	1 7/8-12	3	3.124	1	2 1/16	4 1/2	2 3/8	1/2	1 1/2	4	3 3/8	3 13/16	11 1/8
	3	3	2 3/4-12	2 1/4-12	3 1/2	3.749	1	2 5/8	5	2 7/8	1/2	1 1/2	5 1/2	3 3/8	3 13/16	11 1/8
	4	3 1/2	3 1/4-12	2 1/2-12	3 1/2	4.249	1	3	5	3 3/8	1/2	1 1/2	5 1/2	3 3/8	3 13/16	11 1/8
	5	4	3 3/4-12	3-12	4	4.749	1	3 3/8	5 1/2	3 7/8	1/2	1 1/2	5 1/2	3 3/8	3 13/16	11 1/8
	6	4 1/2	4 1/4-12	3 1/4-12	4 1/2	5.249	1	3 7/8	6	4 3/8	1/2	1 1/2	7	3 3/8	3 13/16	11 1/8
	7	5	4 3/4-12	3 1/2-12	5	5.749	1	4 1/4	6 1/2	4 7/8	1/2	1 1/2	7	3 3/8	3 13/16	11 1/8
	8	5 1/2	5 1/4-12	4-12	5 1/2	6.249	1	4 5/8	7	5 3/8	1/2	1 1/2	7	3 3/8	3 13/16	11 1/8

Side Tapped
Style F
(NFPA Style MS4)

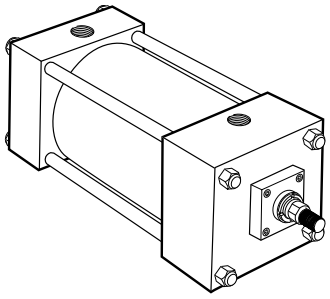

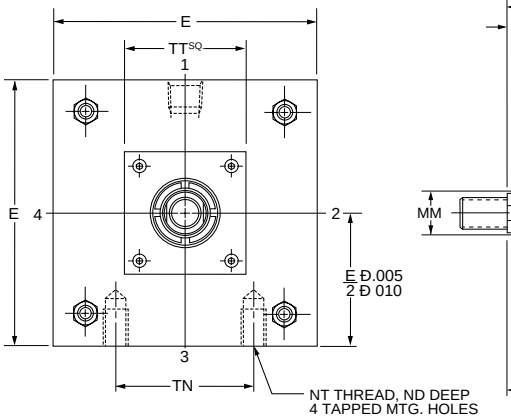

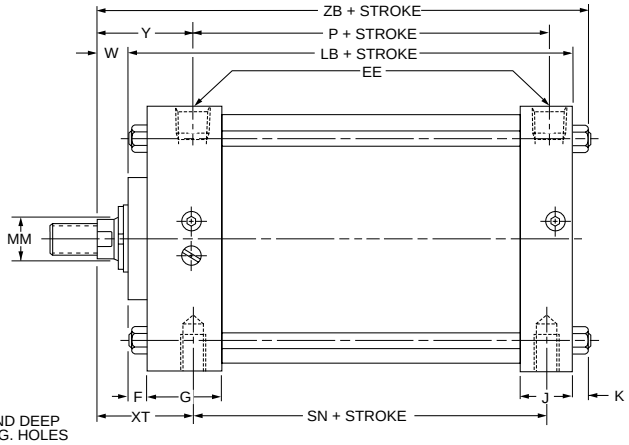

Side End Lugs
Style G
(NFPA Style MS7)

Cylinders with this mounting style are mounted on the precision ground surfaces of the head and cap. There must be a minimum gap of at least 1/64 of an inch between the bottom of the lug and the mounting surface before the mounting bolts are tightened.

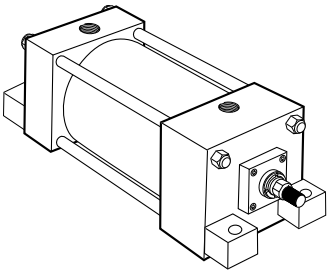

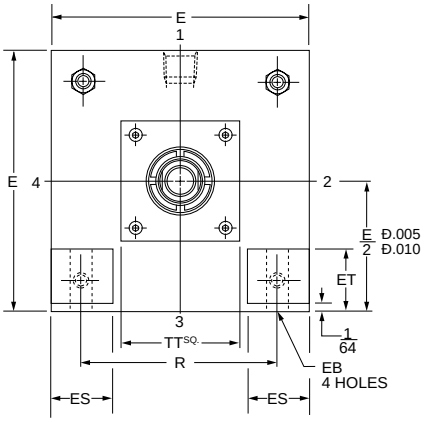

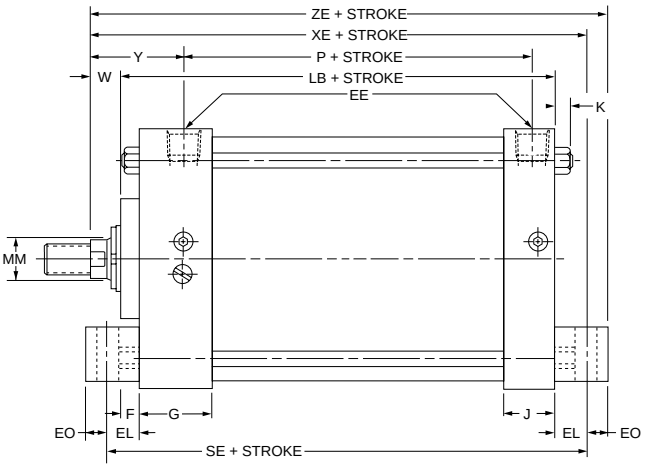

Not offered in the following sizes: 8" bore, rod codes #2, 6, 7, 8, 9 and 0; 10" bore, rod codes #8, 9 and 0; and 12" bore, rod codes #7, 8 and 9.

Rod End Dimensions — see table 2

Thread Style 4
(NFPA Style SM)
Small Male

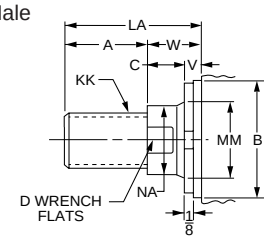

Thread Style 8
(NFPA Style IM)
Intermediate Male

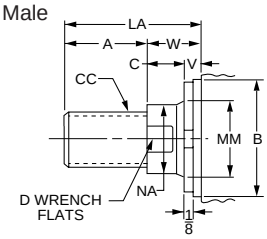

Thread Style 9
(NFPA Style SF)
Small Female

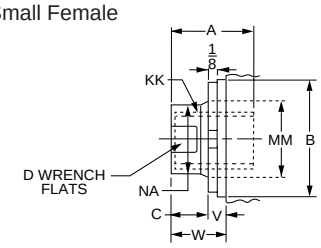

A high strength rod end stud is supplied on thread style 4 through 2" diameter rods and on thread style 8 through 1 3/8" diameter rods. Larger sizes or special rod ends are cut threads. Style 4 rod ends are recommended where the workpiece is secured against the rod shoulder. When the workpiece is not shouldered, style 4 rod ends are recommended through 2" piston rod diameters and style 8 rod ends are recommended on larger diameters. Use style 9 for applications where female rod end threads are required. If rod end is not specified, style 4 will be supplied.

Special Thread Style 3
Special thread, extension, rod eye, blank, etc., are also available.

To order, specify "Style 3" and give desired dimensions for CC or KK, A and LA. If otherwise special, furnish dimensional sketch.

For additional information – call your local Parker Cylinder Distributor.

800.696-6165 www.comoso.com

Table 1—Envelope and Mounting Dimensions

Bore	E	EB	EE NPTF	EL	EO	ES	ET	F	G	J	K	ND	NT	R	TN	Add Stroke LB	Add Stroke P	Add Stroke SE	Add Stroke SN
8	8 1/2	11/16	3/4	1 1/8	5/8	2 1/4	2 1/32	3/4	2	1 1/2	9/16	1 1/8	3/4-10	6.44	4 1/2	5 7/8	3 1/4	7 3/8	3 1/4
10	10 5/8	13/16	1	1 5/16	5/8	2 3/4	2 11/16	3/4	2 1/4	2	11/16	1 1/2	1-8	7.92	5 1/2	7 1/8	4 1/8	9	4 1/8
12	12 3/4	13/16	1	1 5/16	5/8	3 1/2	3 5/16	3/4	2 1/4	2	11/16	1 1/2	1-8	9.40	7 1/4	7 5/8	4 5/8	9 1/2	4 5/8
14	14 3/4	15/16	1 1/4	1 1/2	3/4	4	3 13/16	3/4	2 3/4	2 1/4	3/4	1 7/8	1 1/4-7	10.90	8 3/8	8 7/8	5 1/2	11 1/8	5 1/2

A

Table 2—Rod Dimensions

Bore	Rod No.	Rod Dia. MM	Thread Style 8 CC	Thread Style 4 & 9 KK	Rod Extensions and Pilot Dimensions A	+.000 -.002 B	C	D	LA	NA	V	W
8	1(Std.)	1 3/8	1 1/4-12	1-14	1 5/8	1.999	5/8	1 1/8	2 1/2	1 5/16	1/4	7/8
	2	5 1/2	5 1/4-12	4-12	5 1/2	6.249	1	4 5/8	7	5 3/8	1/2	1 1/2
	3	1 3/4	1 1/2-12	1 1/4-12	2	2.374	3/4	1 1/2	3 1/8	1 11/16	3/8	1 1/8
	4	2	1 3/4-12	1 1/2-12	2 1/4	2.624	7/8	1 11/16	3 1/2	1 15/16	3/8	1 1/4
	5	2 1/2	2 1/4-12	1 7/8-12	3	3.124	1	2 1/16	4 1/2	2 3/8	1/2	1 1/2
	6	3	2 3/4-12	2 1/4-12	3 1/2	3.749	1	2 5/8	5	2 7/8	1/2	1 1/2
	7	3 1/2	3 1/4-12	2 1/2-12	3 1/2	4.249	1	3	5	3 3/8	1/2	1 1/2
	8	4	3 3/4-12	3-12	4	4.749	1	3 3/8	5 1/2	3 7/8	1/2	1 1/2
	9	4 1/2	4 1/4-12	3 1/4-12	4 1/2	5.249	1	3 7/8	6	4 3/8	1/2	1 1/2
	0	5	4 3/4-12	3 1/2-12	5	5.749	1	4 1/4	6 1/2	4 7/8	1/2	1 1/2
10	1(Std.)	1 3/4	1 1/2-12	1 1/4-12	2	2.374	3/4	1 1/2	3 1/8	1 11/16	3/8	1 1/8
	3	2	1 3/4-12	1 1/2-12	2 1/4	2.624	7/8	1 11/16	3 1/2	1 15/16	3/8	1 1/4
	4	2 1/2	2 1/4-12	1 7/8-12	3	3.124	1	2 1/16	4 1/2	2 3/8	1/2	1 1/2
	5	3	2 3/4-12	2 1/4-12	3 1/2	3.749	1	2 5/8	5	2 7/8	1/2	1 1/2
	6	3 1/2	3 1/4-12	2 1/2-12	3 1/2	4.249	1	3	5	3 3/8	1/2	1 1/2
	7	4	3 3/4-12	3-12	4	4.749	1	3 3/8	5 1/2	3 7/8	1/2	1 1/2
	8	4 1/2	4 1/4-12	3 1/4-12	4 1/2	5.249	1	3 7/8	6	4 3/8	1/2	1 1/2
	9	5	4 3/4-12	3 1/2-12	5	5.749	1	4 1/4	6 1/2	4 7/8	1/2	1 1/2
	0	5 1/2	5 1/4-12	4-12	5 1/2	6.249	1	4 5/8	7	5 3/8	1/2	1 1/2
12	1(Std.)	2	1 3/4-12	1 1/2-12	2 1/4	2.624	7/8	1 11/16	3 1/2	1 15/16	3/8	1 1/4
	3	2 1/2	2 1/4-12	1 7/8-12	3	3.124	1	2 1/16	4 1/2	2 3/8	1/2	1 1/2
	4	3	2 3/4-12	2 1/4-12	3 1/2	3.749	1	2 5/8	5	2 7/8	1/2	1 1/2
	5	3 1/2	3 1/4-12	2 1/2-12	3 1/2	4.249	1	3	5	3 3/8	1/2	1 1/2
	6	4	3 3/4-12	3-12	4	4.749	1	3 3/8	5 1/2	3 7/8	1/2	1 1/2
	7	4 1/2	4 1/4-12	3 1/4-12	4 1/2	5.249	1	3 7/8	6	4 3/8	1/2	1 1/2
	8	5	4 3/4-12	3 1/2-12	5	5.749	1	4 1/4	6 1/2	4 7/8	1/2	1 1/2
	9	5 1/2	5 1/4-12	4-12	5 1/2	6.249	1	4 5/8	7	5 3/8	1/2	1 1/2
14	1(Std.)	2 1/2	2 1/4-12	1 7/8-12	3	3.124	1	2 1/16	4 1/2	2 3/8	1/2	1 1/2
	3	3	2 3/4-12	2 1/4-12	3 1/2	3.749	1	2 5/8	5	2 7/8	1/2	1 1/2
	4	3 1/2	3 1/4-12	2 1/2-12	3 1/2	4.249	1	3	5	3 3/8	1/2	1 1/2
	5	4	3 3/4-12	3-12	4	4.749	1	3 3/8	5 1/2	3 7/8	1/2	1 1/2
	6	4 1/2	4 1/4-12	3 1/4-12	4 1/2	5.249	1	3 7/8	6	4 3/8	1/2	1 1/2
	7	5	4 3/4-12	3 1/2-12	5	5.749	1	4 1/4	6 1/2	4 7/8	1/2	1 1/2
	8	5 1/2	5 1/4-12	4-12	5 1/2	6.249	1	4 5/8	7	5 3/8	1/2	1 1/2

Table 3 — Envelope and Mounting Dimensions

Bore	Rod No.	TT	XT	Y	Add Stroke XE	Add Stroke ZB	Add Stroke ZE
8	1(Std.)	4	2 13/16	2 13/16	7 7/8	7 5/16	8 1/2
	2	7	3 7/16	3 7/16	*	7 15/16	*
	3	4	3 1/16	3 1/16	8 1/8	7 9/16	8 3/4
	4	4	3 3/16	3 3/16	8 1/4	7 11/16	8 7/8
	5	4	3 7/16	3 7/16	8 1/2	7 15/16	9 1/8
	6	5 1/2	3 7/16	3 7/16	*	7 15/16	*
	7	5 1/2	3 7/16	3 7/16	*	7 15/16	*
	8	5 1/2	3 7/16	3 7/16	*	7 15/16	*
	9	7	3 7/16	3 7/16	*	7 15/16	*
	0	7	3 7/16	3 7/16	*	7 15/16	*
10	1(Std.)	4	3 1/8	3 1/8	9 9/16	8 15/16	10 3/16
	3	4	3 1/4	3 1/4	9 11/16	9 1/16	10 5/16
	4	4	3 1/2	3 1/2	9 15/16	9 5/16	10 9/16
	5	5 1/2	3 1/2	3 1/2	9 15/16	9 5/16	10 9/16
	6	5 1/2	3 1/2	3 1/2	9 15/16	9 5/16	10 9/16
	7	5 1/2	3 1/2	3 1/2	9 15/16	9 5/16	10 9/16
	8	7	3 1/2	3 1/2	*	9 5/16	*
	9	7	3 1/2	3 1/2	*	9 5/16	*
	0	7	3 1/2	3 1/2	*	9 5/16	*
12	1(Std.)	4	3 1/4	3 1/4	10 3/16	9 9/16	10 13/16
	3	4	3 1/2	3 1/2	10 7/16	9 13/16	11 1/16
	4	5 1/2	3 1/2	3 1/2	10 7/16	9 13/16	11 1/16
	5	5 1/2	3 1/2	3 1/2	10 7/16	9 13/16	11 1/16
	6	5 1/2	3 1/2	3 1/2	10 7/16	9 13/16	11 1/16
	7	7	3 1/2	3 1/2	*	9 13/16	*
	8	7	3 1/2	3 1/2	*	9 13/16	*
	9	7	3 1/2	3 1/2	*	9 13/16	*
14	1(Std.)	4	3 13/16	3 13/16	11 7/8	11 1/8	12 5/8
	3	5 1/2	3 13/16	3 13/16	11 7/8	11 1/8	12 5/8
	4	5 1/2	3 13/16	3 13/16	11 7/8	11 1/8	12 5/8
	5	5 1/2	3 13/16	3 13/16	11 7/8	11 1/8	12 5/8
	6	7	3 13/16	3 13/16	11 7/8	11 1/8	12 5/8
	7	7	3 13/16	3 13/16	11 7/8	11 1/8	12 5/8
	8	7	3 13/16	3 13/16	11 7/8	11 1/8	12 5/8

* Mounting style G not offered in this rod size.

Caution: When using mounting style G, check clearance between mounting members and rod attachment or accessory. If necessary, specify longer rod extension to avoid interference with mounting members.

Side End Angles

Style CB
(NFPA Style MS1)

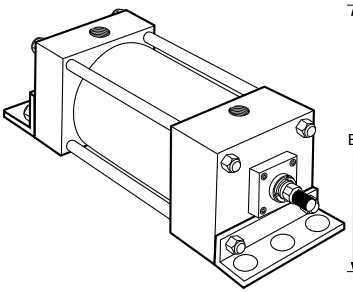

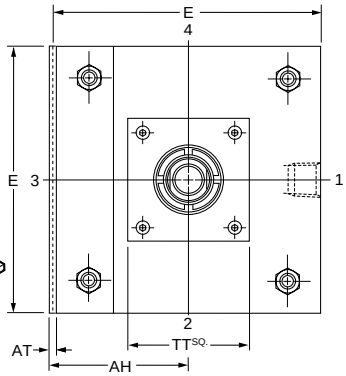

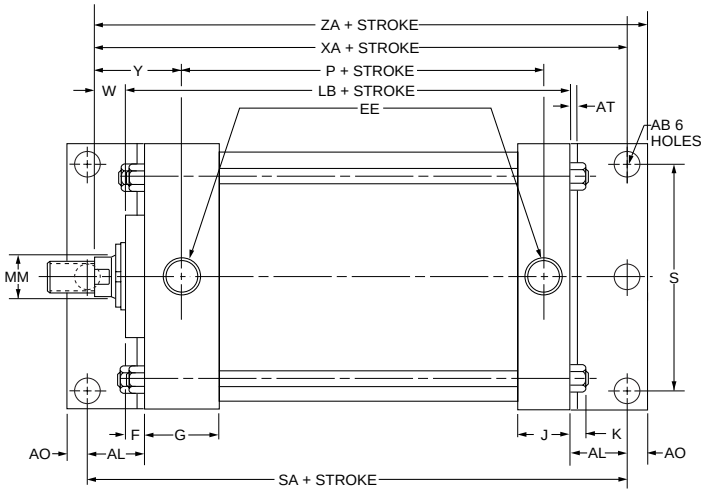

Not offered in the following sizes: 8" bore, rod codes #2, 6, 7, 8, 9 and 0; 10" bore, rod codes #8, 9 and 0.

Cap Fixed Clevis

Style BB
(NFPA Style MP1)

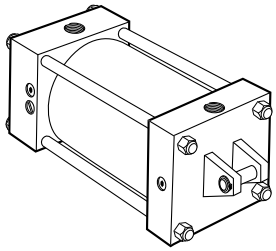

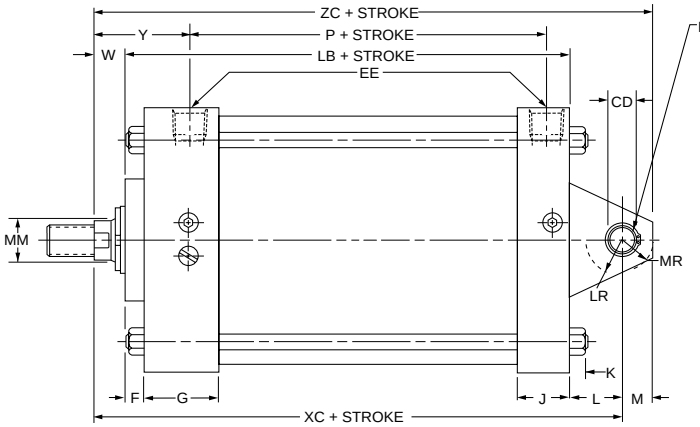

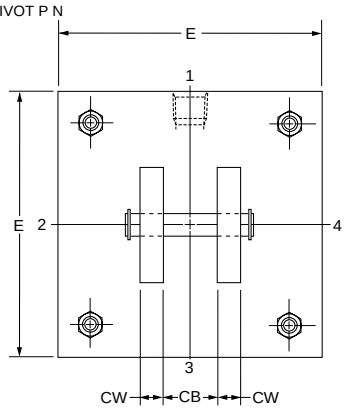

Rod End Dimensions — see table 2

Thread Style 4
(NFPA Style SM)
Small Male

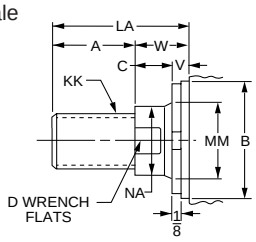

Thread Style 8
(NFPA Style IM)
Intermediate Male

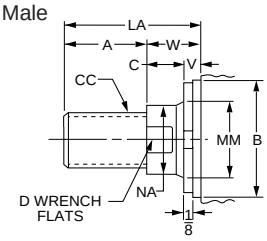

Thread Style 9
(NFPA Style SF)
Small Female

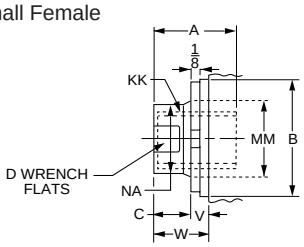

A high strength rod end stud is supplied on thread style 4 through 2" diameter rods and on thread style 8 through 1 3/8" diameter rods. Larger sizes or special rod ends are cut threads. Style 4 rod ends are recommended where the workpiece is secured against the rod shoulder. When the workpiece is not shouldered, style 4 rod ends are recommended through 2" piston rod diameters and style 8 rod ends are recommended on larger diameters. Use style 9 for applications where female rod end threads are required. If rod end is not specified, style 4 will be supplied.

"Special" Thread Style 3

Special thread, extension, rod eye, blank, etc., are also available.

To order, specify "Style 3" and give desired dimensions for CC or KK, A and LA. If otherwise special, furnish dimensional sketch.

For additional information – call your local Parker Cylinder Distributor.

Table 1—Envelope and Mounting Dimensions

Bore	AB	AH	AL	AO	AT	CB	+.000 CD* -.002	CW	E	EE NPTF	F	G	J	K	L	LR	M	MR	S	Add Stroke LB	Add Stroke P	Add Stroke SA
8	13/16	4 1/4	1 13/16	11/16	1/4	1 1/2	1.001	3/4	8 1/2	3/4	3/4	2	1 1/2	9/16	1 1/2	1 1/4	1	1 3/16	7 1/8	5 7/8	3 1/4	8 3/4
10	1 1/16	5 5/16	2 1/8	7/8	1/4	2	1.376	1	10 5/8	1	3/4	2 1/4	2	11/16	2 1/8	1 7/8	1 3/8	1 5/8	8 7/8	7 1/8	4 1/8	10 5/8
12	1 1/16	6 3/8	2 1/8	7/8	3/8	2 1/2	1.751	1 1/4	12 3/4	1	3/4	2 1/4	2	11/16	2 1/4	2 1/8	1 3/4	2 1/8	11	7 5/8	4 5/8	11 1/8
14	1 5/16	7 3/8	2 7/16	1 1/16	3/8	2 1/2	2.001	1 1/4	14 3/4	1 1/4	3/4	2 3/4	2 1/4	3/4	2 1/2	2 3/8	2	2 3/8	12 5/8	8 7/8	5 1/2	13

* CD is pin diameter.

A

Table 2—Rod Dimensions

Bore	Rod No.	Rod Dia. MM	Thread Style 8 CC	Thread Style 4 & 9 KK	Rod Extensions and Pilot Dimensions A	+.000 -.002 B	C	D	LA	NA	V	W
8	1(Std.)	1 3/8	1 1/4-12	1-14	1 5/8	1.999	5/8	1 1/8	2 1/2	1 5/16	1/4	7/8
	2	5 1/2	5 1/4-12	4-12	5 1/2	6.249	1	4 5/8	7	5 3/8	1/2	1 1/2
	3	1 3/4	1 1/2-12	1 1/4-12	2	2.374	3/4	1 1/2	3 1/8	1 11/16	3/8	1 1/8
	4	2	1 3/4-12	1 1/2-12	2 1/4	2.624	7/8	1 11/16	3 1/2	1 15/16	3/8	1 1/4
	5	2 1/2	2 1/4-12	1 7/8-12	3	3.124	1	2 1/16	4 1/2	2 3/8	1/2	1 1/2
	6	3	2 3/4-12	2 1/4-12	3 1/2	3.749	1	2 5/8	5	2 7/8	1/2	1 1/2
	7	3 1/2	3 1/4-12	2 1/2-12	3 1/2	4.249	1	3	5	3 3/8	1/2	1 1/2
	8	4	3 3/4-12	3-12	4	4.749	1	3 3/8	5 1/2	3 7/8	1/2	1 1/2
	9	4 1/2	4 1/4-12	3 1/4-12	4 1/2	5.249	1	3 7/8	6	4 3/8	1/2	1 1/2
	0	5	4 3/4-12	3 1/2-12	5	5.749	1	4 1/4	6 1/2	4 7/8	1/2	1 1/2
10	1(Std.)	1 3/4	1 1/2-12	1 1/4-12	2	2.374	3/4	1 1/2	3 1/8	1 11/16	3/8	1 1/8
	3	2	1 3/4-12	1 1/2-12	2 1/4	2.624	7/8	1 11/16	3 1/2	1 15/16	3/8	1 1/4
	4	2 1/2	2 1/4-12	1 7/8-12	3	3.124	1	2 1/16	4 1/2	2 3/8	1/2	1 1/2
	5	3	2 3/4-12	2 1/4-12	3 1/2	3.749	1	2 5/8	5	2 7/8	1/2	1 1/2
	6	3 1/2	3 1/4-12	2 1/2-12	3 1/2	4.249	1	3	5	3 3/8	1/2	1 1/2
	7	4	3 3/4-12	3-12	4	4.749	1	3 3/8	5 1/2	3 7/8	1/2	1 1/2
	8	4 1/2	4 1/4-12	3 1/4-12	4 1/2	5.249	1	3 7/8	6	4 3/8	1/2	1 1/2
	9	5	4 3/4-12	3 1/2-12	5	5.749	1	4 1/4	6 1/2	4 7/8	1/2	1 1/2
	0	5 1/2	5 1/4-12	4-12	5 1/2	6.249	1	4 5/8	7	5 3/8	1/2	1 1/2
12	1(Std.)	2	1 3/4-12	1 1/2-12	2 1/4	2.624	7/8	1 11/16	3 1/2	1 15/16	3/8	1 1/4
	3	2 1/2	2 1/4-12	1 7/8-12	3	3.124	1	2 1/16	4 1/2	2 3/8	1/2	1 1/2
	4	3	2 3/4-12	2 1/4-12	3 1/2	3.749	1	2 5/8	5	2 7/8	1/2	1 1/2
	5	3 1/2	3 1/4-12	2 1/2-12	3 1/2	4.249	1	3	5	3 3/8	1/2	1 1/2
	6	4	3 3/4-12	3-12	4	4.749	1	3 3/8	5 1/2	3 7/8	1/2	1 1/2
	7	4 1/2	4 1/4-12	3 1/4-12	4 1/2	5.249	1	3 7/8	6	4 3/8	1/2	1 1/2
	8	5	4 3/4-12	3 1/2-12	5	5.749	1	4 1/4	6 1/2	4 7/8	1/2	1 1/2
	9	5 1/2	5 1/4-12	4-12	5 1/2	6.249	1	4 5/8	7	5 3/8	1/2	1 1/2
14	1(Std.)	2 1/2	2 1/4-12	1 7/8-12	3	3.124	1	2 1/16	4 1/2	2 3/8	1/2	1 1/2
	3	3	2 3/4-12	2 1/4-12	3 1/2	3.749	1	2 5/8	5	2 7/8	1/2	1 1/2
	4	3 1/2	3 1/4-12	2 1/2-12	3 1/2	4.249	1	3	5	3 3/8	1/2	1 1/2
	5	4	3 3/4-12	3-12	4	4.749	1	3 3/8	5 1/2	3 7/8	1/2	1 1/2
	6	4 1/2	4 1/4-12	3 1/4-12	4 1/2	5.249	1	3 7/8	6	4 3/8	1/2	1 1/2
	7	5	4 3/4-12	3 1/2-12	5	5.749	1	4 1/4	6 1/2	4 7/8	1/2	1 1/2
	8	5 1/2	5 1/4-12	4-12	5 1/2	6.249	1	4 5/8	7	5 3/8	1/2	1 1/2

Table 3 — Envelope and Mounting Dimensions

Bore	Rod No.	TT	Y	Add Stroke XA	Add Stroke XC	Add Stroke ZA	Add Stroke ZC
8	1(Std.)	4	2 13/16	8 9/16	8 1/4	9 1/4	9 1/4
	2	7	3 7/16	*	8 7/8	*	9 7/8
	3	4	3 1/16	8 13/16	8 1/2	9 1/2	9 1/2
	4	4	3 3/16	8 15/16	8 5/8	9 5/8	9 5/8
	5	4	3 7/16	9 3/16	8 7/8	9 7/8	9 7/8
	6	5 1/2	3 7/16	*	8 7/8	*	9 7/8
	7	5 1/2	3 7/16	*	8 7/8	*	9 7/8
	8	5 1/2	3 7/16	*	8 7/8	*	9 7/8
	9	7	3 7/16	*	8 7/8	*	9 7/8
	0	7	3 7/16	*	8 7/8	*	9 7/8
10	1(Std.)	4	3 1/8	10 3/8	10 3/8	11 1/4	11 3/4
	3	4	3 1/4	10 1/2	10 1/2	11 3/8	11 7/8
	4	4	3 1/2	10 3/4	10 3/4	11 5/8	12 1/8
	5	5 1/2	3 1/2	10 3/4	10 3/4	11 5/8	12 1/8
	6	5 1/2	3 1/2	10 3/4	10 3/4	11 5/8	12 1/8
	7	5 1/2	3 1/2	10 3/4	10 3/4	11 5/8	12 1/8
	8	7	3 1/2	*	10 3/4	*	12 1/8
	9	7	3 1/2	*	10 3/4	*	12 1/8
	0	7	3 1/2	*	10 3/4	*	12 1/8
12	1(Std.)	4	3 1/4	11	11 1/8	11 7/8	12 7/8
	3	4	3 1/2	11 1/4	11 3/8	12 1/8	13 1/8
	4	5 1/2	3 1/2	11 1/4	11 3/8	12 1/8	13 1/8
	5	5 1/2	3 1/2	11 1/4	11 3/8	12 1/8	13 1/8
	6	5 1/2	3 1/2	11 1/4	11 3/8	12 1/8	13 1/8
	7	7	3 1/2	11 1/4	11 3/8	12 1/8	13 1/8
	8	7	3 1/2	11 1/4	11 3/8	12 1/8	13 1/8
	9	7	3 1/2	11 1/4	11 3/8	12 1/8	13 1/8
14	1(Std.)	4	3 13/16	12 13/16	12 7/8	13 7/8	14 7/8
	3	5 1/2	3 13/16	12 13/16	12 7/8	13 7/8	14 7/8
	4	5 1/2	3 13/16	12 13/16	12 7/8	13 7/8	14 7/8
	5	5 1/2	3 13/16	12 13/16	12 7/8	13 7/8	14 7/8
	6	7	3 13/16	12 13/16	12 7/8	13 7/8	14 7/8
	7	7	3 13/16	12 13/16	12 7/8	13 7/8	14 7/8
	8	7	3 13/16	12 13/16	12 7/8	13 7/8	14 7/8

* Mounting style G not offered in this rod size.

Caution: When using mounting style G, check clearance between mounting members and rod attachment or accessory. If necessary, specify longer rod extension to avoid interference with mounting members.

Head Trunnion
Style D
(NFPA Style MT1)

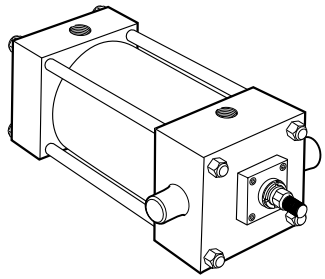

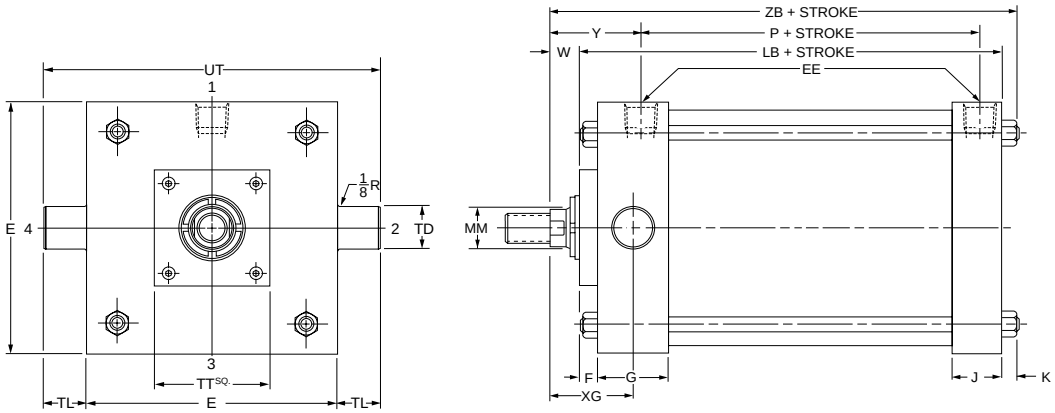

Cap Trunnion
Style DB
(NFPA Style MT2)

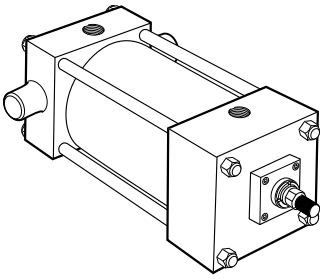

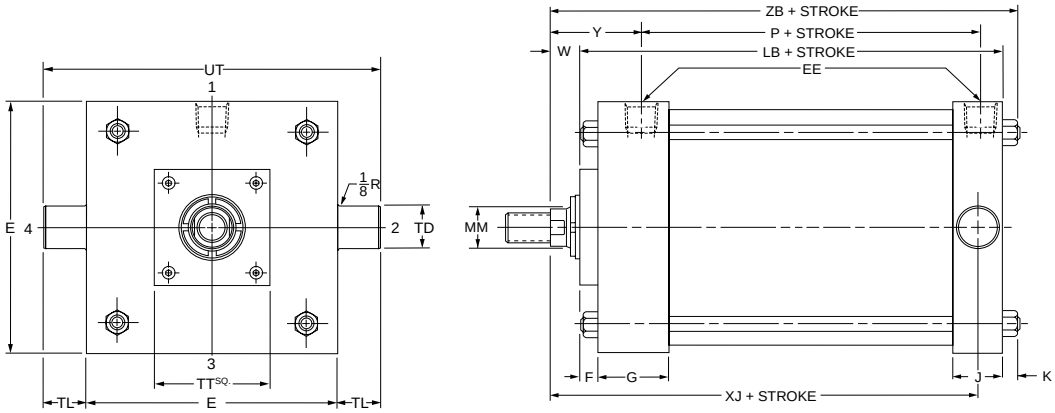

Intermediate Fixed Trunnion
Style DD
(NFPA Style MT4)

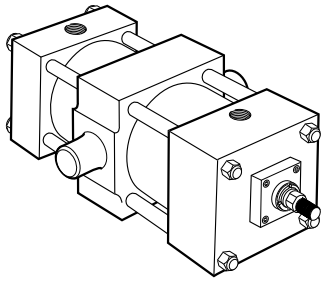

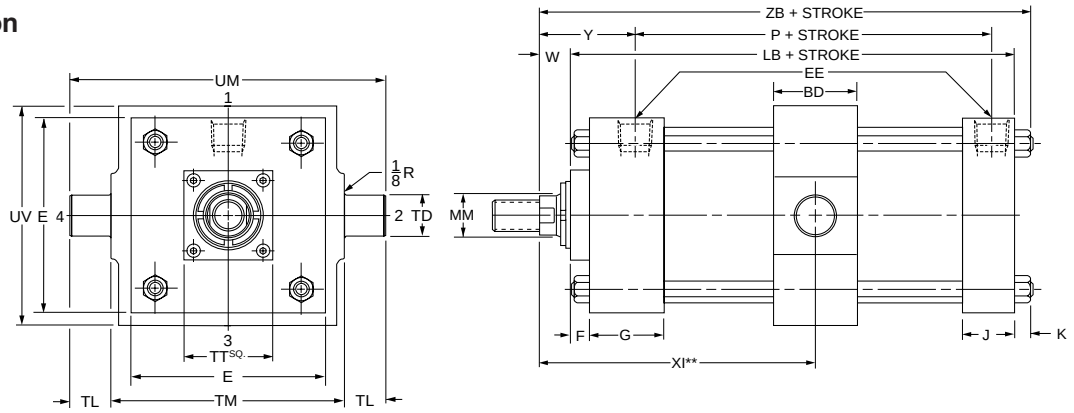

Rod End Dimensions — see table 2

Thread Style 4
(NFPA Style SM)
Small Male

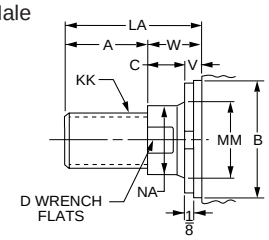

Thread Style 8
(NFPA Style IM)
Intermediate Male

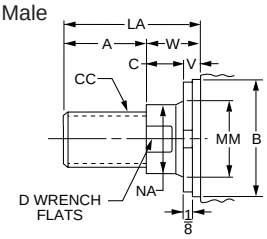

Thread Style 9
(NFPA Style SF)
Small Female

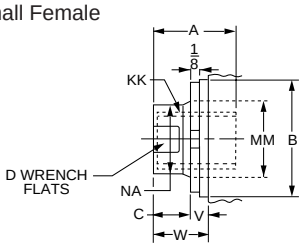

A high strength rod end stud is supplied on thread style 4 through 2" diameter rods and on thread style 8 through 1 3/8" diameter rods. Larger sizes or special rod ends are cut threads. Style 4 rod ends are recommended where the workpiece is secured against the rod shoulder. When the workpiece is not shouldered, style 4 rod ends are recommended through 2" piston rod diameters and style 8 rod ends are recommended on larger diameters. Use style 9 for applications where female rod end threads are required. If rod end is not specified, style 4 will be supplied.

"Special" Thread Style 3

Special thread, extension, rod eye, blank, etc., are also available.

To order, specify "Style 3" and give desired dimensions for CC or KK, A and LA. If otherwise special, furnish dimensional sketch.

For additional information – call your local Parker Cylinder Distributor.

Table 1—Envelope and Mounting Dimensions

Bore	BD	E	EE NPTF	F	G	J	K	+.000 TD -.001	TL	TM	UM	UT	UV	Add Stroke LB	Add Stroke P	Style DD Min. Stroke
8	2 1/2	8 1/2	3/4	3/4	2	1 1/2	9/16	1.375	1 3/8	9 3/4	12 1/2	11 1/4	9 1/2	5 7/8	3 1/4	7/8
10	3	10 5/8	1	3/4	2 1/4	2	11/16	1.750	1 3/4	12	15 1/2	14 1/8	11 3/4	7 1/8	4 1/8	7/8
12	3	12 3/4	1	3/4	2 1/4	2	11/16	1.750	1 3/4	14	17 1/2	16 1/4	13 3/4	7 5/8	4 5/8	3/8
14	3 1/2	14 3/4	1 1/4	3/4	2 3/4	2 1/4	3/4	2.000	2	16 1/4	20 1/4	18 3/4	16	8 7/8	5 1/2	3/8

A

Table 2—Rod Dimensions

Bore	Rod No.	Rod Dia. MM	Thread Style 8 CC	Thread Style 4 & 9 KK	Rod Extensions and Pilot Dimensions A	+.000 -.002 B	C	D	LA	NA	V	W
8	1(Std.)	1 3/8	1 1/4-12	1-14	1 5/8	1.999	5/8	1 1/8	2 1/2	1 5/16	1/4	7/8
	2	5 1/2	5 1/4-12	4-12	5 1/2	6.249	1	4 5/8	7	5 3/8	1/2	1 1/2
	3	1 3/4	1 1/2-12	1 1/4-12	2	2.374	3/8	1 1/2	3 1/8	1 11/16	3/8	1 1/8
	4	2	1 3/4-12	1 1/2-12	2 1/4	2.624	7/8	1 11/16	3 1/2	1 15/16	3/8	1 1/4
	5	2 1/2	2 1/4-12	1 7/8-12	3	3.124	1	2 1/16	4 1/2	2 3/8	1/2	1 1/2
	6	3	2 3/4-12	2 1/4-12	3 1/2	3.749	1	2 5/8	5	2 7/8	1/2	1 1/2
	7	3 1/2	3 1/4-12	2 1/2-12	3 1/2	4.249	1	3	5	3 3/8	1/2	1 1/2
	8	4	3 3/4-12	3-12	4	4.749	1	3 3/8	5 1/2	3 7/8	1/2	1 1/2
	9	4 1/2	4 1/4-12	3 1/4-12	4 1/2	5.249	1	3 7/8	6	4 3/8	1/2	1 1/2
	0	5	4 3/4-12	3 1/2-12	5	5.749	1	4 1/4	6 1/2	4 7/8	1/2	1 1/2
10	1(Std.)	1 3/4	1 1/2-12	1 1/4-12	2	2.374	3/4	1 1/2	3 1/8	1 11/16	3/8	1 1/8
	3	2	1 3/4-12	1 1/2-12	2 1/4	2.624	7/8	1 11/16	3 1/2	1 15/16	3/8	1 1/4
	4	2 1/2	2 1/4-12	1 7/8-12	3	3.124	1	2 1/16	4 1/2	2 3/8	1/2	1 1/2
	5	3	2 3/4-12	2 1/4-12	3 1/2	3.749	1	2 5/8	5	2 7/8	1/2	1 1/2
	6	3 1/2	3 1/4-12	2 1/2-12	3 1/2	4.249	1	3	5	3 3/8	1/2	1 1/2
	7	4	3 3/4-12	3-12	4	4.749	1	3 3/8	5 1/2	3 7/8	1/2	1 1/2
	8	4 1/2	4 1/4-12	3 1/4-12	4 1/2	5.249	1	3 7/8	6	4 3/8	1/2	1 1/2
	9	5	4 3/4-12	3 1/2-12	5	5.749	1	4 1/4	6 1/2	4 7/8	1/2	1 1/2
	0	5 1/2	5 1/4-12	4-12	5 1/2	6.249	1	4 5/8	7	5 3/8	1/2	1 1/2
12	1(Std.)	2	1 3/4-12	1 1/2-12	2 1/4	2.624	7/8	1 11/16	3 1/2	1 15/16	3/8	1 1/4
	3	2 1/2	2 1/4-12	1 7/8-12	3	3.124	1	2 1/16	4 1/2	2 3/8	1/2	1 1/2
	4	3	2 3/4-12	2 1/4-12	3 1/2	3.749	1	2 5/8	5	2 7/8	1/2	1 1/2
	5	3 1/2	3 1/4-12	2 1/2-12	3 1/2	4.249	1	3	5	3 3/8	1/2	1 1/2
	6	4	3 3/4-12	3-12	4	4.749	1	3 3/8	5 1/2	3 7/8	1/2	1 1/2
	7	4 1/2	4 1/4-12	3 1/4-12	4 1/2	5.249	1	3 7/8	6	4 3/8	1/2	1 1/2
	8	5	4 3/4-12	3 1/2-12	5	5.749	1	4 1/4	6 1/2	4 7/8	1/2	1 1/2
	9	5 1/2	5 1/4-12	4-12	5 1/2	6.249	1	4 5/8	7	5 3/8	1/2	1 1/2
14	1(Std.)	2 1/2	2 1/4-12	1 7/8-12	3	3.124	1	2 1/16	4 1/2	2 3/8	1/2	1 1/2
	3	3	2 3/4-12	2 1/4-12	3 1/2	3.749	1	2 5/8	5	2 7/8	1/2	1 1/2
	4	3 1/2	3 1/4-12	2 1/2-12	3 1/2	4.249	1	3	5	3 3/8	1/2	1 1/2
	5	4	3 3/4-12	3-12	4	4.749	1	3 3/8	5 1/2	3 7/8	1/2	1 1/2
	6	4 1/2	4 1/4-12	3 1/4-12	4 1/2	5.249	1	3 7/8	6	4 3/8	1/2	1 1/2
	7	5	4 3/4-12	3 1/2-12	5	5.749	1	4 1/4	6 1/2	4 7/8	1/2	1 1/2
	8	5 1/2	5 1/4-12	4-12	5 1/2	6.249	1	4 5/8	7	5 3/8	1/2	1 1/2

Table 3 — Envelope and Mounting Dimensions

Bore	Rod No.	TT	XG	Min.** XI	Y	Add Stroke XJ	Add Stroke ZB
8	1(Std.)	4	2 5/8	4 15/16	2 13/16	6	7 5/16
	2	7	3 1/4	5 9/16	3 7/16	6 5/8	7 15/16
	3	4	2 7/8	5 3/16	3 1/16	6 1/4	7 9/16
	4	4	3	5 5/16	3 3/16	6 3/8	7 11/16
	5	4	3 1/4	5 9/16	3 7/16	6 5/8	7 15/16
	6	5 1/2	3 1/4	5 3/16	3 7/16	6 5/8	7 15/16
	7	5 1/2	3 1/4	5 9/16	3 7/16	6 5/8	7 15/16
	8	5 1/2	3 1/4	5 9/16	3 7/16	6 5/8	7 15/16
	9	7	3 1/4	5 9/16	3 7/16	6 5/8	7 15/16
	0	7	3 1/4	5 9/16	3 7/16	6 5/8	7 15/16
10	1(Std.)	4	3	5 11/16	3 1/8	7 1/4	8 15/16
	3	4	3 1/8	5 13/16	3 1/4	7 3/8	9 1/16
	4	4	3 3/8	6 1/16	3 1/2	7 5/8	9 5/16
	5	5 1/2	3 3/8	6 1/16	3 1/2	7 5/8	9 5/16
	6	5 1/2	3 3/8	6 1/16	3 1/2	7 5/8	9 5/16
	7	5 1/2	3 3/8	6 1/16	3 1/2	7 5/8	9 5/16
	8	7	3 3/8	6 1/16	3 1/2	7 5/8	9 5/16
	9	7	3 3/8	6 1/16	3 1/2	7 5/8	9 5/16
	0	7	3 3/8	6 1/16	3 1/2	7 5/8	9 5/16
12	1(Std.)	4	3 1/8	5 13/16	3 1/4	7 7/8	9 9/16
	3	4	3 3/8	6 1/16	3 1/2	8 1/8	9 13/16
	4	5 1/2	3 3/8	6 1/16	3 1/2	8 1/8	9 13/16
	5	5 1/2	3 3/8	6 1/16	3 1/2	8 1/8	9 13/16
	6	5 1/2	3 3/8	6 1/16	3 1/2	8 1/8	9 13/16
	7	7	3 3/8	6 1/16	3 1/2	8 1/8	9 13/16
	8	7	3 3/8	6 1/16	3 1/2	8 1/8	9 13/16
	9	7	3 3/8	6 1/16	3 1/2	8 1/8	9 13/16
14	1(Std.)	4	3 5/8	6 13/16	3 13/16	9 1/4	11 1/8
	3	5 1/2	3 5/8	6 13/16	3 13/16	9 1/4	11 1/8
	4	5 1/2	3 5/8	6 13/16	3 13/16	9 1/4	11 1/8
	5	5 1/2	3 5/8	6 13/16	3 13/16	9 1/4	11 1/8
	6	7	3 5/8	6 13/16	3 13/16	9 1/4	11 1/8
	7	7	3 5/8	6 13/16	3 13/16	9 1/4	11 1/8
	8	7	3 5/8	6 13/16	3 13/16	9 1/4	11 1/8

**Dimension XI to be specified by customer.

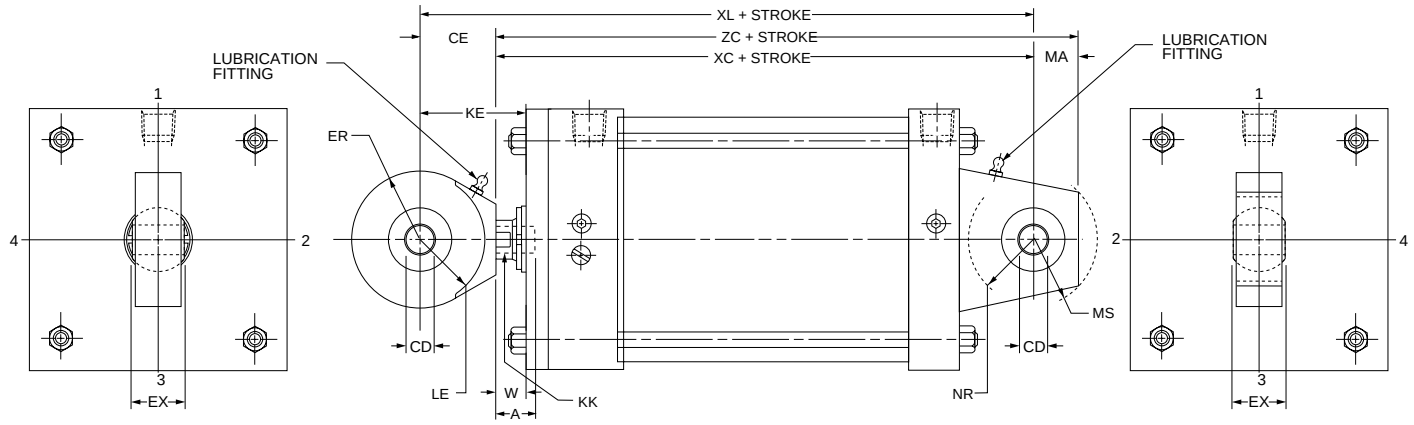

Bore	Rod No.	Rod Dia. MM	Thread Style 9 KK	Thread Style 7 KK	A	W	Add Stroke XC	Add Stroke XL	Add Stroke ZC	KE	CD*	CE	ER	EX	LE	MA	MS	NR	Max. Oper. PSI 2A
1½	1(Std.)	⅝	7/16-20	—	¾	⅝	5⅜	6¼	6⅛	1½	-.0005 .5000	⅞	13/16	7/16	¾	¾	15/16	⅝	250
	2	1	**	7/16-20	¾	1	5¾	6⅝	6½	1⅞									
2	1(Std.)	⅝	7/16-20	—	¾	⅝	5⅜	6¼	6⅛	1½	-.0005 .5000	⅞	13/16	7/16	¾	¾	15/16	⅝	250
	2	1⅜	**	7/16-20	¾	1¼	6	6⅞	6¾	2⅛									
	3	1	**	7/16-20	¾	1	5¾	6⅝	6½	1⅞									
2½	1(Std.)	⅝	7/16-20	—	¾	⅝	5½	6⅜	6¼	1½	-.0005 .5000	⅞	13/16	7/16	¾	¾	15/16	⅝	250
	2	1¾	**	7/16-20	¾	1½	6⅜	7¼	7⅛	2⅜									
	3	1	**	7/16-20	¾	1	5⅞	6¾	6⅝	1⅞									
	4	1⅜	**	7/16-20	¾	1¼	6⅛	7	6⅞	2⅛									
3¼	1(Std.)	1	¾-16	—	1⅛	¾	6⅞	8⅛	7⅞	2	-.0005 .7500	1¼	1⅛	21/32	1 1/16	1	1⅜	1	250
	2	2	**	¾-16	1⅛	1⅜	7½	8¾	8½	2⅝									
	3	1⅜	**	¾-16	1⅛	1	7⅛	8⅜	8⅛	2¼									
	4	1¾	**	¾-16	1⅛	1¼	7⅜	8⅝	8⅜	2½									
4	1(Std.)	1	¾-16	—	1⅛	¾	6⅞	8⅛	7⅞	2	-.0005 .7500	1¼	1⅛	21/32	1 1/16	1	1⅜	1	250
	2	2½	**	¾-16	1⅛	1⅝	7¾	9	8¾	2⅞									
	3	1⅜	**	¾-16	1⅛	1	7⅛	8⅜	8⅛	2¼									
	4	1¾	**	¾-16	1⅛	1¼	7⅜	8⅝	8⅜	2½									
	5	2	**	¾-16	1⅛	1⅜	7½	8¾	8½	2⅝									
5	1(Std.)	1	¾-16	—	1⅛	¾	7⅛	8⅜	8⅛	2	-.0005 .7500	1¼	1⅛	21/32	1 1/16	1	1⅜	1	250
	2	3½	**	¾-16	1⅛	1⅝	8	9¼	9	2⅞									
	3	1⅜	**	¾-16	1⅛	1	7⅜	8⅝	8⅜	2¼									
	4	1¾	**	¾-16	1⅛	1¼	7⅝	8⅞	8⅝	2½									
	5	2	**	¾-16	1⅛	1⅜	7¾	9	8¾	2⅝									
	6	2½	**	¾-16	1⅛	1⅝	8	9¼	9	2⅞									
	7	3	**	¾-16	1⅛	1⅝	8	9¼	9	2⅞									
6	1(Std.)	1⅜	1-14	—	1⅝	⅞	8⅛	10	9⅜	2¾	-.0005 1.0000	1⅞	1¼	⅞	1 7/16	1¼	1 11/16	1¼	250
	2	4	**	1-14	1⅝	1½	8¾	10⅝	10	3⅜									
	3	1¾	**	1-14	1⅝	1⅛	8⅜	10¼	9⅝	3									
	4	2	**	1-14	1⅝	1¼	8½	10⅜	9¾	3⅛									
	5	2½	**	1-14	1⅝	1½	8¾	10⅝	10	3⅜									
	6	3	**	1-14	1⅝	1½	8¾	10⅝	10	3⅜									
	7	3½	**	1-14	1⅝	1½	8¾	10⅝	10	3⅜									

Maximum operating pressure at 4:1 design factor is based on tensile strength of material. Pressure ratings are based on standard commercial bearing ratings.
Note: For additional dimensions see Series 2A, page 30.
* Dimension CD is hole diameter.
** Corresponding rod eye pin diameter may not match pin diameter of cap.
Rod No. 1 is standard.

For additional information – call your local Parker Cylinder Distributor.

800.696-6165 www.comoso.com

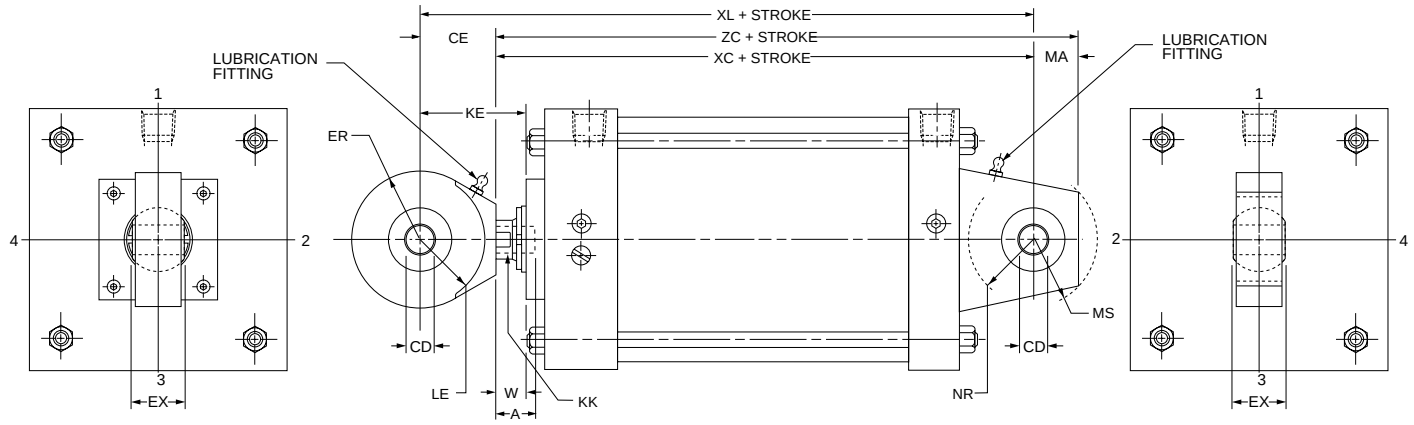

Bore	Rod No.	Rod Dia. MM	Thread Style 9 KK	Thread Style 7 KK	A	W	Add Stroke XC	Add Stroke XL	Add Stroke ZC	KE	CD*	CE	ER	EX	LE	MA	MS	NR	Max. Oper. PSI 2A
8	1(Std.)	1 3/8	1-14	–	1 5/8	7/8	8 1/4	10 1/8	9 1/2	2 3/4	-.0005 1.0000	1 7/8	1 1/4	7/8	1 7/16	1 1/4	1 11/16	1 1/4	250
	2	5 1/2	**	1-14	1 5/8	1 1/2	8 7/8	10 3/4	10 1/8	3 3/8									
	3	1 3/4	**	1-14	1 5/8	1 1/8	8 1/2	10 3/8	9 3/4	3									
	4	2	**	1-14	1 5/8	1 1/4	8 5/8	10 1/2	9 7/8	3 1/8									
	5	2 1/2	**	1-14	1 5/8	1 1/2	8 7/8	10 3/4	10 1/8	3 3/8									
	6	3	**	1-14	1 5/8	1 1/2	8 7/8	10 3/4	10 1/8	3 3/8									
	7	3 1/2	**	1-14	1 5/8	1 1/2	8 7/8	10 3/4	10 1/8	3 3/8									
	8	4	**	1-14	1 5/8	1 1/2	8 7/8	10 3/4	10 1/8	3 3/8									
	9	4 1/2	**	1-14	1 5/8	1 1/2	8 7/8	10 3/4	10 1/8	3 3/8									
	0	5	**	1-14	1 5/8	1 1/2	8 7/8	10 3/4	10 1/8	3 3/8									
10	1(Std.)	1 3/4	1 1/4-12	–	2	1 1/8	10 3/8	12 1/2	12 1/4	3 1/4	-.0005 1.3750	2 1/8	1 11/16	1 3/16	1 7/8	1 7/8	2 7/16	1 5/8	250
	3	2	**	1 1/4-12	2	1 1/4	10 1/2	12 5/8	12 3/8	3 3/8									
	4	2 1/2	**	1 1/4-12	2	1 1/2	10 3/4	12 7/8	12 5/8	3 5/8									
	5	3	**	1 1/4-12	2	1 1/2	10 3/4	12 7/8	12 5/8	3 5/8									
	6	3 1/2	**	1 1/4-12	2	1 1/2	10 3/4	12 7/8	12 5/8	3 5/8									
	7	4	**	1 1/4-12	2	1 1/2	10 3/4	12 7/8	12 5/8	3 5/8									
	8	4 1/2	**	1 1/4-12	2	1 1/2	10 3/4	12 7/8	12 5/8	3 5/8									
	9	5	**	1 1/4-12	2	1 1/2	10 3/4	12 7/8	12 5/8	3 5/8									
	0	5 1/2	**	1 1/4-12	2	1 1/2	10 3/4	12 7/8	12 5/8	3 5/8									
12	1(Std.)	2	1 1/2-12	–	2 1/4	1 1/4	11 1/8	13 5/8	13 5/8	3 3/4	-.0005 1.7500	2 1/2	2 1/16	1 17/32	2 1/8	2 1/2	2 7/8	2 1/16	250
	3	2 1/2	**	1 1/2-12	2 1/4	1 1/2	11 3/8	13 7/8	13 7/8	4									
	4	3	**	1 1/2-12	2 1/4	1 1/2	11 3/8	13 7/8	13 7/8	4									
	5	3 1/2	**	1 1/2-12	2 1/4	1 1/2	11 3/8	13 7/8	13 7/8	4									
	6	4	**	1 1/2-12	2 1/4	1 1/2	11 3/8	13 7/8	13 7/8	4									
	7	4 1/2	**	1 1/2-12	2 1/4	1 1/2	11 3/8	13 7/8	13 7/8	4									
	8	5	**	1 1/2-12	2 1/4	1 1/2	11 3/8	13 7/8	13 7/8	4									
	9	5 1/2	**	1 1/2-12	2 1/4	1 1/2	11 3/8	13 7/8	13 7/8	4									
14	1(Std.)	2 1/2	1 7/8-12	–	3	1 1/2	12 7/8	15 5/8	15 3/8	4 1/4	-.0005 2.0000	2 3/4	2 1/2	1 3/4	2 1/2	2 1/2	3 5/16	2 3/8	250
	3	3	**	1 7/8-12	3	1 1/2	12 7/8	15 5/8	15 3/8	4 1/4									
	4	3 1/2	**	1 7/8-12	3	1 1/2	12 7/8	15 5/8	15 3/8	4 1/4									
	5	4	**	1 7/8-12	3	1 1/2	12 7/8	15 5/8	15 3/8	4 1/4									
	6	4 1/2	**	1 7/8-12	3	1 1/2	12 7/8	15 5/8	15 3/8	4 1/4									
	7	5	**	1 7/8-12	3	1 1/2	12 7/8	15 5/8	15 3/8	4 1/4									
	8	5 1/2	**	1 7/8-12	3	1 1/2	12 7/8	15 5/8	15 3/8	4 1/4									

Maximum operating pressure at 4:1 design factor is based on tensile strength of material. Pressure ratings are based on standard commercial bearing ratings.
Note: For additional dimensions see Series 2A, page 40.
* Dimension CD is hole diameter.
** Corresponding rod eye pin diameter may not match pin diameter of cap. Rod No. 1 is standard.

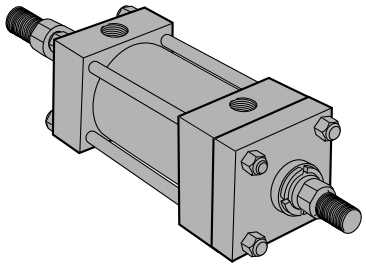

Mounting Styles for Single Rod Models	Mounting Styles for Corresponding Double Rod Models*	Dimensions Shown on This Page Supplement Dimensions on Pages Listed Below	
		1"-6" Bores Page No.	8"-14" Bores Page No.
T	KT	20	34
TB**	KTB	20	34
TD	KTD	20	34
J	KJ	20	—
JB**	KJB	22	34
C**	KC	24	36
E	KE	24	36
F	KF	24	38
CB	KCB	26	40
G	KC	26	38
D	KD	28	42
DD	KDD†	28	42

*If only one end of these Double Rod Cylinders is to be cushioned, be sure to specify clearly which end this will be.

**Available in 7" bore, page 32.

†Specify XI dimension from rod end #1.

How to Use Double Rod Cylinder Dimensioned Drawings

1"- 6" Bores

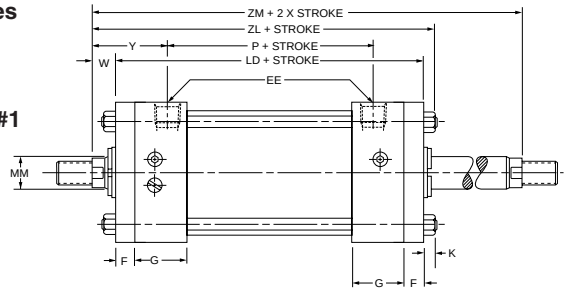

7"- 14" Bores

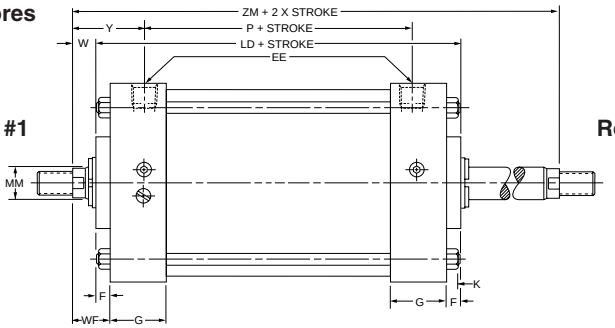

To determine dimensions for a double rod cylinder, first refer to the desired single rod mounting style cylinder shown on preceding pages of this catalog. (See table at left.) After selecting necessary dimensions from that drawing, return to this page supplement the single rod dimensions with those shown on drawings at right and dimension table below. Note that double rod cylinders have a head (Dim. G) at both ends and that dimension LD replace LB and ZL replaces ZB, etc. The double rod dimensions differ from, or are in addition to those for single rod cylinders shown on preceding pages and provide the information needed to completely dimension a double rod cylinder.

On a double rod cylinder where the two rod ends are different, be sure to clearly state which rod end is to be assembled at which end. Port position 1 is standard. If other than standard, specify pos. 2, 3 or 4 when viewed from rod end #1 only. See port position information in Section C.

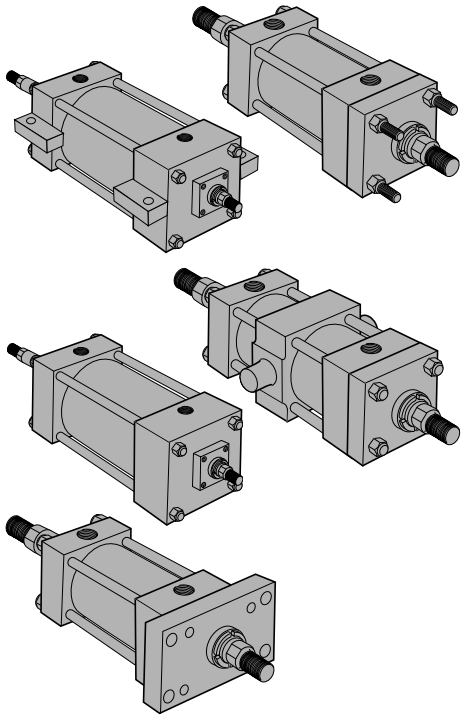

All dimensions are in inches and apply to Code 1 rod sizes only. For alternate rod sizes, determine all envelope dimensions (within LD dim.) as described above and then use appropriate rod end dimensions for proper rod size from single rod cylinder.

Bore	Rod No.	Rod Dia. MM	Add Stroke										Add 2X Stroke
			LD	ZL	SAK	XAK	ZAK	SSK	SNK	SEK	XEK	ZEK	ZM
1	1	1/2	4 3/4	5 1/2	6 3/8	6 3/16	6 1/2	3 3/8*	2 1/8	*	*	*	6
1 1/2	1	5/8	4 7/8	5 3/4	6 7/8	6 1/2	6 7/8	3 3/8	2 1/4	6 3/8	6 1/4	6 1/2	6 1/8
2	1	5/8	4 7/8	5 13/16	6 7/8	6 1/2	6 7/8	3 3/8	2 1/4	6 3/4	6 7/16	6 3/4	6 1/8
2 1/2	1	5/8	5	5 15/16	7	6 5/8	7	3 1/2	2 3/8	7 1/8	6 11/16	7	6 1/4
3 1/4	1	1	6	7 1/8	8 1/2	8	8 1/2	3 3/4	2 5/8	7 3/4	7 5/8	8	7 1/2
4	1	1	6	7 1/8	8 1/2	8	8 1/2	3 3/4	2 5/8	8	7 3/4	8 1/8	7 1/2
5	1	1	6 1/4	7 7/16	9	8 3/8	9	3 5/8	2 7/8	8 3/8	8 1/16	8 9/16	7 3/4
6	1	1 3/8	7	8 5/16	9 3/4	9 1/4	9 7/8	4 1/8	3 1/8	9	8 7/8	9 3/8	8 3/4
7	1	1 3/8	7 1/8	—	—	—	—	4 1/4	3 1/4	—	—	—	8 7/8
8	1	1 3/8	7 1/8	—	9 1/4	9 1/16	9 3/4	4 1/4	3 1/4	7 7/8	8 3/8	9	8 7/8
10	1	1 3/4	8 1/8	—	10 7/8	10 5/8	11 1/2	4 7/8	4 1/8	9 1/4	9 13/16	10 7/16	10 3/8
12	1	2	8 5/8	—	11 3/8	11 1/4	12 1/8	5 3/8	4 5/8	9 3/4	10 7/16	11 1/16	11 1/8
14	1	2 1/2	10 1/8	—	13 1/2	13 5/16	14 3/8	6 3/8	5 1/2	11 5/8	12 3/8	13 1/8	13 1/8
Replaces: On single rod mounting styles:			LB	ZB	SA	XA	ZA	SS	SN	SE	XE	ZE	—
			All Mtg. Styles		CB			C,E	F	G			All Mtgs.

* Mounting styles KE, KG and KDD not available in 1" and 7" bore sizes.

For additional information – call your local Parker Cylinder Distributor.

Parker offers a complete range of Cylinder Accessories to assure you of the greatest versatility in present or future cylinder applications. Accessories offered for the respective cylinder include the Rod Eye, Pivot Pin and Clevis Bracket. To select the proper part number for any desired accessory refer to the charts below.

Spherical Rod Eye

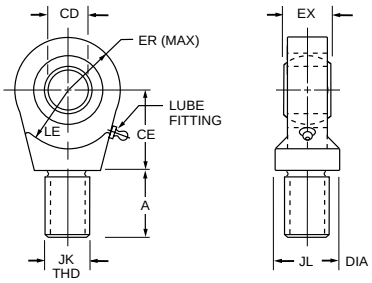

Order to fit Piston Rod Thread Size.

Bore Sizes	Series 2A	1 1/2, 2 & 2 1/2	3 1/4, 4 & 5	6 & 8	10	12	14
Rod Eye	Part No.	132290	132291	132292	132293	132294	132295
	CD	.5000-.0005	.7500-.0005	1.0000-.0005	1.3750-.0005	1.7500-.0005	2.0000-.0005
	A	11/16	1	1 1/2	2	2 1/8	2 7/8
	CE	7/8	1 1/4	1 7/8	2 1/8	2 1/2	2 3/4
	EX	7/16	21/32	7/8	1 3/16	1 17/32	1 3/4
	ER	13/16	1 1/8	1 1/4	1 11/16	2 1/16	2 1/2
	LE	3/4	1 1/16	1 7/16	1 7/8	2 1/8	2 1/2
	JK	7/16-20	3/4-16	1-14	1 1/4-12	1 1/2-12	1 7/8-12
	JL	7/8	1 5/16	1 1/2	2	2 1/4	2 3/4
	LOAD CAPACITY LBS.	2644	9441	16860	28562	43005	70193

Pivot Pin

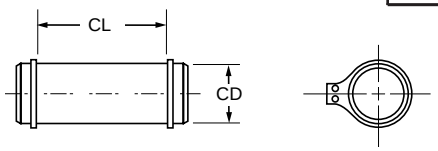

Pivot Pins are furnished with (2) Retainer Rings.

Bore Sizes	Series 2A	1 1/2, 2 & 2 1/2	3 1/4, 4 & 5	6 & 8	10	12	14
Pivot Pin	Part No.	83962	83963	83964	83965	83966	83967
	CD	.4997-.0004	.7497-.0005	.9997-.0005	1.3746-.0006	1.7496-.0006	1.9996-.0007
	CL	1 9/16	2 1/32	2 1/2	3 5/16	4 7/32	4 15/16
	LOAD CAPACITY LBS.	8600	19300	34300	65000	105200	137400

Clevis Bracket

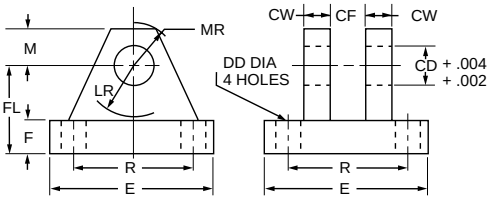

Order to fit Mounting Plate or Rod Eye.

Bore Sizes	Series 2A	1 1/2, 2 & 2 1/2	3 1/4, 4 & 5	6 & 8	10	12	14
Clevis Bracket	Part No.	83947	83948	83949	83950	83951	83952
	CD	1/2	3/4	1	1 3/8	1 3/4	2
	CF	7/16	21/32	7/8	1 3/16	1 17/32	1 3/4
	CW	1/2	5/8	3/4	1	1 1/4	1 1/2
	DD	13/32	17/32	17/32	21/32	29/32	29/32
	E	3	3 3/4	5 1/2	6 1/2	8 1/2	10 5/8
	F	1/2	5/8	3/4	7/8	1 1/4	1 1/2
	FL	1 1/2	2	2 1/2	3 1/2	4 1/2	5
	LR	15/16	1 3/8	1 11/16	2 7/16	2 7/8	3 5/16
	M	1/2	7/8	1	1 3/8	1 3/4	2
	MR	5/8	1	1 3/16	1 5/8	2 1/16	2 3/8
	R	2.05	2.76	4.10	4.95	6.58	7.92
	LOAD CAPACITY LBS.	5770	9450	14300	20322	37800	50375

Series 2A
Heavy Duty Air Cylinders

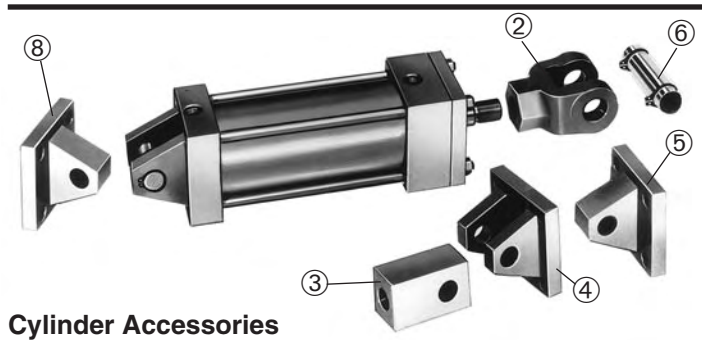

Cylinder Accessories

Parker offers a complete range of cylinder accessories to assure you of greatest versatility in present or future cylinder applications.

Rod End Accessories

Accessories offered for the rod end of the cylinder include Rod Clevis, Eye Bracket, Knuckle, Clevis Bracket and Pivot Pin. To select the proper part number for any desired accessory, refer to Chart A below and look opposite the thread size of the rod end as indicated in the first column. The Pivot Pins, Eye Brackets and Clevis Brackets are listed opposite the thread size which their mating Knuckles or Clevises fit.

Chart A

	Mating Parts			Mating Parts			
Thread Size	Rod Clevis	Eye Bracket	Pin	Knuckle	Clevis Bracket	Pin	Alignment Coupler
5/16-24	51221	74077	—	74075	74076	74078	134757 0031
7/16-20	50940	69195	68368	69089	69205	68368	134757 0044
1/2-20	50941	69195	68368	69090	69205	68368	134757 0050
3/4-16	50942	69196	68369	69091	69206†	68369	134757 0075
3/4-16	133284	69196	68369	69091	69206	68369	134757 0075
7/8-14	50943	*85361	68370	69092	69207	68370	134757 0088
1-14	50944	*85361	68370	69093	69207	68370	134757 0100
1-14	133285	*85361	68370	69093	69207	68370	134757 0100
1 1/4-12	50945	69198	68371	69094	69208	68371	134757 0125
1 1/4-12	133286	69198	68371	69094	69208	68371	134757 0125
1 1/2-12	50946	*85362	68372	69095	69209	68372	133739 0150
1 3/4-12	50947	*85363	68373	69096	69210	69215	133739 0175
1 7/8-12	50948	*85363	68373	69097	69210	69215	133739 0188
2 1/4-12	50949	*85364	68374	69098	69211	68374	Consult Factory
2 1/2-12	50950	*85365	68375	69099	69212	68375	
2 3/4-12	50951	*85365	68375	69100	69213	69216	
3 1/4-12	50952	73538	73545	73536	73542	73545	
3 1/2-12	50953	73539	73547	73437	73542	73545	
4-12	50954	73539	73547	73438	73543	82181	
4 1/2-12	–	–	–	73439	73544	73547	

†For alignment coupler dimensions, see Section C.

*Cylinder accessory dimensions conform to NFPA recommended standard NFPA/T3.6.8 R1-1984, NFPA recommended standard fluid power systems — cylinder — dimensions for accessories for cataloged square head industrial types. Parker adopted this standard in April, 1985. Eye Brackets or Mounting Plates shipped before this date may have different dimensions and will not necessarily interchange with the NFPA standard. For dimensional information on older style Eye Brackets or Mounting Plates consult Drawing #144805 or previous issues of this catalog.

NOTE: For economical accessory selection, it is recommended that rod end style 4 be specified on your cylinder order.

Accessory Load Capacity

The various accessories on Pages 48 and 49 have been load rated for your convenience. The load capacity in bs. shown on page 49, is the recommended maximum load for that accessory based on a 4:1 design factor in tensions. (Pivot Pin is rated in shear.) Before specifying, compare the actual load or the tension (pull) force at maximum operating pressure of the cylinder with the load capacity of the accessory you plan to use. If load or pull force of cylinder exceeds load capacity of accessory, consult factory.

Chart B

Mtg. Plate Part No.	Series 2A Bore Size
74076‡	1"
69195	1 1/2", 2", 2 1/2"
69196	3 1/4", 4", 5"
*85361	6", 7", 8"
69198	10"
*85362	12"
*85363	14"

‡Mounting plate for 1" bore single lug BC & BB cylinder mounting style is Clevis Bracket P/N 74076.

Mounting Plates

Mounting Plates for Style BB and Style BC (Clevis mounted) cylinders are offered. To select proper part number for your application, refer to Chart B, above right.

② Female Rod Clevis

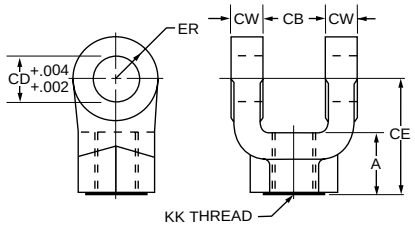

Order to fit thread size.

③ Knuckle (Female Rod Eye)

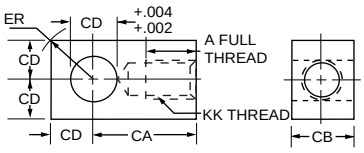

Order to fit thread size.

④ Clevis Bracket for Knuckle

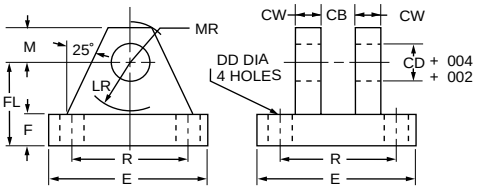

Order to fit Knuckle.

⑧ Mounting Plate or ⑤ Eye Bracket

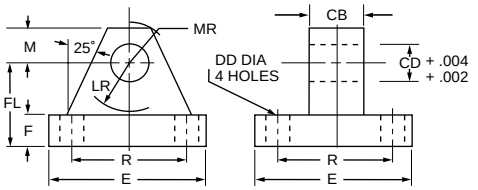

1. When used to mate with the Rod Clevis, select from Chart A.
2. When used to mount the Style BB or BC cylinders, select from the Mounting Plate Selection Table. See Chart B at lower left.

⑥ Pivot Pin

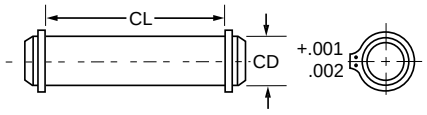

1. Pivot Pins are furnished with Clevis Mounted Cylinders as standard.
2. Pivot Pins are furnished with (2) Retainer Rings.
3. Pivot Pins must be ordered as a separate item if to be used with Knuckles, Rod Clevises, or Clevis Brackets.

For additional information – call your local Parker Cylinder Distributor.

	Female Rod Clevis Part Number																		
	51221†	50940	50941	50942	133284	50943	50944	133285	50945	133286	50946	50947	50948	50949	50950	50951	50952	50953	50954
A	13/16	3/4	3/4	1 1/8	1 1/8	1 5/8	1 5/8	1 5/8	1 7/8	2	2 1/4	3	3	3 1/2	3 1/2	3 1/2	3 1/2‡	4‡	4‡
CB	11/32	3/4	3/4	1 1/4	1 1/4	1 1/2	1 1/2	1 1/2	2	2	2 1/2	2 1/2	2 1/2	3	3	3	4	4 1/2	4 1/2
CD	5/16	1/2	1/2	3/4	3/4	1	1	1	1 3/8	1 3/8	1 3/4	2	2	2 1/2	3	3	3 1/2	4	4
CE	2 1/4	1 1/2	1 1/2	2 1/8	2 3/8	2 15/16	2 15/16	3 1/8	3 3/4	4 1/8	4 1/2	5 1/2	5 1/2	6 1/2	6 3/4	6 3/4	7 3/4	8 13/16	8 13/16
CW	13/64	1/2	1/2	5/8	5/8	3/4	3/4	3/4	1	1	1 1/4	1 1/4	1 1/4	1 1/2	1 1/2	1 1/2	2	2 1/4	2 1/4
ER	19/64	1/2	1/2	3/4	3/4	1	1	1	1 3/8	1 3/8	1 3/4	2	2	2 1/2	2 3/4	2 3/4	3 1/2	4	4
KK	5/16-24	7/16-20	1/2-20	3/4-16	3/4-16	7/8-14	1-14	1-14	1 1/4-12	1 1/4-12	1 1/2-12	1 3/4-12	1 7/8-12	2 1/4-12	2 1/2-12	2 3/4-12	3 1/4-12	3 1/2-12	4-12
Load Capacity Lbs. ⊖	2600	4250	4900	11200	11200	18800	19500	19500	33500	33500	45600	65600	65600	98200	98200	98200	156700	193200	221200

	Knuckle Part Number																
	74075	69089	69090	69091	69092	69093	69094	69095	69096	69097	69098	69099	69100	73536	73437	73438	73439
A	3/4	3/4	3/4	1 1/8	1 1/8	1 5/8	2	2 1/4	2 1/4	3	3 1/2	3 1/2	3 5/8	4 1/2	5	5 1/2	5 1/2
CA	1 1/2	1 1/2	1 1/2	2 1/16	2 3/8	2 13/16	3 7/16	4	4 3/8	5	5 13/16	6 1/8	6 1/2	7 5/8	7 5/8	9 1/8	9 1/8
CB	7/16	3/4	3/4	1 1/4	1 1/2	1 1/2	2	2 1/2	2 1/2	2 1/2	3	3	3 1/2	4	4	4 1/2	5
CD	7/16	1/2	1/2	3/4	1	1	1 3/8	1 3/4	2	2	2 1/2	3	3	3 1/2	3 1/2	4	4
ER	19/32	23/32	23/32	1 1/16	1 7/16	1 7/16	1 31/32	2 1/2	2 27/32	2 27/32	3 9/16	4 1/4	4 1/4	4 31/32	4 31/32	5 11/16	5 11/16
KK	5/16-24	7/16-20	1/2-20	3/4-16	7/8-14	1-14	1 1/4-12	1 1/2-12	1 3/4-12	1 7/8-12	2 1/4-12	2 1/2-12	2 3/4-12	3 1/4-12	3 1/2-12	4-12	4 1/2-12
Load Capacity Lbs.⊖	3300	5000	5700	12100	13000	21700	33500	45000	53500	75000	98700	110000	123300	161300	217300	273800	308500

	Clevis Bracket for Knuckle Part Number												
	74076	69205	69206	69207	69208	69209	69210	69211	69212	69213	73542	73543	73544
CB	15/32	3/4	1 1/4	1 1/2	2	2 1/2	2 1/2	3	3	3 1/2	4	4 1/2	5
CD	7/16	1/2	3/4	1	1 3/8	1 3/4	2	2 1/2	3	3	3 1/2	4	4
CW	3/8	1/2	5/8	3/4	1	1 1/4	1 1/2	1 1/2	1 1/2	1 1/2	2	2	2
DD	17/64	13/32	17/32	21/32	21/32	29/32	1 1/16	1 3/16	1 5/16	1 5/16	1 13/16	2 1/16	2 1/16
E	2 1/4	3 1/2	5	6 1/2	7 1/2	9 1/2	12 3/4	12 3/4	12 3/4	12 3/4	15 1/2	17 1/2	17 1/2
F	3/8	1/2	5/8	3/4	7/8	7/8	1	1	1	1	1 11/16	1 15/16	1 15/16
FL	1	1 1/2	1 7/8	2 1/4	3	3 5/8	4 1/4	4 1/2	6	6	6 11/16	7 11/16	7 11/16
LR	5/8	3/4	1 3/16	1 1/2	2	2 3/4	3 3/16	3 1/2	4 1/4	4 1/4	5	5 3/4	5 3/4
M	3/8	1/2	3/4	1	1 3/8	1 3/4	2 1/4	2 1/2	3	3	3 1/2	4	4
MR	1/2	5/8	29/32	1 1/4	1 21/32	2 7/32	2 25/32	3 1/8	3 19/32	3 19/32	4 1/8	4 7/8	4 7/8
R	1.75	2.55	3.82	4.95	5.73	7.50	9.40	9.40	9.40	9.40	12.00	13.75	13.75
Load Capacity Lbs.⊖	3600	7300	14000	19200	36900	34000	33000	34900	33800	36900	83500	102600	108400

	Eye Bracket and Mounting Plate Part Number										
	74077	69195	69196	85361*	69198	85362*	85363*	85364*	85365*	73538	73539
CB	5/16	3/4	1 1/4	1 1/2	2	2 1/2	2 1/2	3	3	4	4 1/2
CD	5/16	1/2	3/4	1	1 3/8	1 3/4	2	2 1/2	3	3 1/2	4
DD	17/64	13/32	17/32	21/32	21/32	29/32	1 1/16	1 3/16	1 5/16	1 13/16	2 1/16
E	2 1/4	2 1/2	3 1/2	4 1/2	5	6 1/2	7 1/2	8 1/2	9 1/2	12 5/8	14 7/8
F	3/8	3/8	5/8	7/8	7/8	1 1/8	1 1/2	1 3/4	2	1 11/16	1 15/16
FL	1	1 1/8	1 7/8	2 3/8	3	3 3/8	4	4 3/4	5 1/4	5 11/16	6 7/16
LR	5/8	3/4	1 1/4	1 1/2	2 1/8	2 1/4	2 1/2	3	3 1/4	4	4 1/2
M	3/8	1/2	3/4	1	1 3/8	1 3/4	2	2 1/2	2 3/4	3 1/2	4
MR	1/2	9/16	7/8	1 1/4	1 5/8	2 1/8	2 7/16	3	3 1/4	4 1/8	5 1/4
R	1.75	1.63	2.55	3.25	3.82	4.95	5.73	6.58	7.50	9.62	11.45
Load Capacity Lbs.⊖	1700	4100	10500	20400	21200	49480	70000	94200	121900	57400	75000

	Pivot Pin Part Number													
	74078	68368	68369	68370	68371	68372	68373	69215	68374	68375	69216	73545	82181	73547•
CD	7/16	1/2	3/4	1	1 3/8	1 3/4	2	2	2 1/2	3	3	3 1/2	4	4
CL	1 5/16	1 7/8	2 5/8	3 1/8	4 1/8	5 3/16	5 3/16	5 11/16	6 3/16	6 1/4	6 3/4	8 1/4	8 5/8	9
Shear Capacity Lbs.⊖	6600	8600	19300	34300	65000	105200	137400	137400	214700	309200	309200	420900	565800	565800

*Cylinder accessory dimensions conform to NFPA recommended standard NFPA/T3.6 8 R1-1984, NFPA recommended standard fluid power systems — cylinder — dimensions foraccessories for cataloged square head industrial types. Parker adopted this standard in April, 1985. Eye Brackets or Mounting Plates shipped before this date may have different dimensions and will not necessarily interchange with the NFPA standard. For dimensional information on older style Eye Brackets or Mounting Plates consult Drawing #144805 or previous issues of this catalog.

⊖ See Accessory Load Capacity note on page 48.

•These sizes supplied with cotter pins.

†Includes Pivot Pin.

‡Consult appropriate cylinder rod end dimensions for compatibility.

How to Order Series "2A" Cylinders

When ordering Series 2A cylinders, please review the following:

Note: Duplicate cylinders can be ordered by giving the SERIAL NUMBER from the nameplate of the original cylinder. Factory records supply a quick positive identification.

Piston Rods: Specify rod code number based on diameter. Give thread style number for a standard thread or specify dimensions. See "Style 3 Rod End" below.

Cushions: If cushions are required specify according to the model number on the next page. If the cylinder is to have a double rod and only one cushion is required, be sure to specify clearly which end of the cylnder is to be cushioned.

Special Modifications: Additional information is required on orders for cylinders with special modifications. This is best handled with descriptive notes. For further information, consult factory.

Fluid Medium: Series 2A hydraulic cylinders are equipped with seals for use with lubricated air.

Class 1 Seals

Class 1 seals are the seals provided as standard in a cylinder assembly unless otherwise specified. For further information on fluid compat bility or operating limitations of all components, see section C.

For the 2A series cylinders the following make-up Class 1 Seals:

Primary Piston Rod Seal – Nitrile with PTFE back-up washers
Piston Rod Wiper – Nitrile
Piston Seals – Nitrile with polymyte back-up washers
O-Rings – Nitrile

Combination Mountings

Single Rod End The first mounting is the one called out on the head end of the cylinder. The second or subsequent mountings are called out as they appear in the assembly moving away from the rod end. Exception: When tie rod mountings are part of a combination, the model number should contain an "S" (Special) in the model code and a note in the body of the order clarifying the mounting arrangement. The "P" is used to define a thrust key and is not considered to be a mounting. However, it is located at the primary end.

Example: 4.00 CCBB2ALTS14AC x 10.000

Combination "C" mounting head only. "BB" mounting cap end
This cylinder is also cushioned at both ends.

Double Rod End In general, the model number is read left to right corresponding to the cylinder as viewed from left to right with the primary end at rod end #1. See Double Rod Models information page in this section. For this option the piston rod number, piston rod end, and piston rod threads are to be specified for both ends. The simplest are for symmetric cylinders such as: TD, C, E, F, G, and CB mounts. All other mounting styless, the description of the first rod end will be at the mounting end. In the case of multiple mounts, the description of the first rod end will be at the primary mounting end. For "DD" mounts, the description of the first rod end will be the same location as the "XI" dimension.

Example: 4.00 KDD2ALT24A/18A x 10.000 XI=8

This is a center trunnion mounting cylinder with the XI dimension measured from the code 2 rod side of the cylinder which has the style 4 thread. The opposite end code 1 rod with the style 8 thread.

Style 3 Rod End

A style 3 rod end indicates a special rod end configuration. All special piston rod dimensions must have **all three:** KK; A; W/WF or LA/LAF specified with the rod fully retracted. A sketch or drawing should be submitted for rod ends requiring special machining such as snap ring grooves, keyways, tapers, multiple diameters, etc. It is good design practice to have this machining done on a diameter at least 0.065 inches smaller than the piston rod diameter. This allows the piston rod to have a chamfer preventing rod seal damage during assembly or maintenance. Standard style 55 rod ends with a longer than standard WG dimension should call out a style 3 rod end and the note: **same as 55 except WG=____**. A drawing should be submitted for special 55 rod ends that have specific tolerances or special radii. Special rod ends that have smaller than standard male threads, larger than standard female threads, or style 55 rod ends with smaller than standard AF or AE dimensions are to be reviewed by Engineering for proper strength at operating pressure.

Service Policy

On cylinders returned to the factory for repairs, it is standard policy for the Cylinder Division to make such part replacements as will put the cylinder in as good as new condition. Should the condition of the returned cylinder be such that expenses for repair would exceed the costs of a new one, you will be notified.

Address all correspondence and make shipments to, Service Department at your nearest regional plant listed in the pages of this catalog.

Certified Dimensions

Parker Cylinder Division guarantees that all cylinders ordered from this catalog will be built to dimensions shown. All dimensions are certified to be correct, and thus it is not necessary to request certified drawings.

For additional information – call your local Parker Cylinder Distributor.

800.696-6165 www.comoso.com

Series 2A Model Numbers – How to Develop Them – How to "Decode" Them

Parker Series 2A cylinders can be completely and accurately described by a model number consisting of coded symbols. To develop a model number, select only those symbols that represent the cylinder required, and place them in the sequence indicated below.

Note: Page numbers with a letter prefix, ie: C77, are located in section C of this catalog.

6" C K F P TB –2A T V S 1 4 2 A C 12"

Feature	Description	Page No.	Symbol
Bore*	Specify in inches	—	—
Cushion-Head	Used **only** if cushion required	C101-103	C
Double-Rod	Used **only** if double-rod cylinder is required	A46	K
Mounting* Style	Head Tie Rods Extended	20 & 34	TB
	Cap Tie Rods Extended	20 & 34	TC
	Both End Tie Rods Extended	20 & 34	TD
	Head Rectangular Flange	20	J
	Cap Rectangular Flange	20	H
	Head Square Flange	22 & 34	JB
	Cap Square Flange	22 & 34	HB
	Side Lugs	24 & 36	C
	Centerline Lugs	24 & 36	E
	Side Tapped	24 & 38	F
	Side End Angles	26 & 40	CB
	Side End Lugs	26 & 38	G
	Cap Fixed Clevis	30 & 40	BB
	Head Trunnion	28 & 42	D
	Cap Trunnion	28 & 42	DB
	Intermediate Fixed Trunnion ‡	28 & 42	DD
	Cap Detachable Clevis	30	BC
	Spherical Bearing	44 & 45	SB
Mounting Modifications	Thrust Key (Styles C,F,G, & CB **only**)	C93	P
	Manifold Port O-Ring Seal (Style C **only**)	C89-91	M
	Removable Trunnions	C88	R
Combination Mounting Style	Any Practical Mounting Style	–	As
	Listed Above	–	listed
		–	above
Series*	Used in **all** 2A Model Numbers	–	–2A
Piston	Lipseal™ Piston standard. No need for symbol in model number.	–	–
	Piston Bumper Seals	C20	4
Ports*	NPTF (Dry Seal Pipe Thread) is standard.	C89-91	U
	Used **only** for SAE Straight Thread O-Ring Port	C89-91	T
	Used **only** for BSP (Parallel Thread SO 228)	C89-91	R
	Used **only** for BSPT (Taper Thread ISO 7-Rc)	C89-91	B
	Used **only** for Metric Thread	C89-91	G
	Used **only** for Metric Thread per SO 6149	C89-91	Y
Common Modifications	Nut Retained Piston	A19	F
	Fluorocarbon Seals	C83	V
	Water Service	C83	W
Special Modifications	Used **only** if special Modifications are required: Oversize Ports	C89-91	
	Port Position Change	C89-91	
	Rod End Bellows	C104	
	Special Seals	C83	S
	Stop Tube†	C95	
	Stroke Adjuster	C93	
	Tie Rod Supports	C93	
	Water Service Modification	C83	
Piston Rod* Number	For Single Rod Cylinders, select one only.	–	1
	Refer to Rod number listing, Table 2,	–	2
	Pages 20 through 43.	–	3
	Note: Check chart in Section C, page 96 for	–	4
	minimum piston rod diameter	–	5
		–	6
		–	7
		–	8
		–	9
		–	0
Piston* Rod End	Select:		
	Style 4 Small Male	C92	4
	Style 7 Female Thread for Spherical Rod Eye	A44, 45	7
	Style 8 Intermediate Male	C92	8
	Style 9 Short Female	C92	9
	Style 55 Rod End for Flange Coupling	C19	55
	Style 3 Special (Specify)	C92	3
Piston Rod Alternate Thread	Used **only** for stud two times longer than standard.	C92	2
Piston Rod* Threads	UNF Standard	C92	A
	BSF (British Fine)	C92	W
	Metric	C101-C103	M
Cushion-Cap	Used **only** if cushion required	C93	C
Stroke*†	Specify in inches		–

Use Symbol S to designate any special modification except piston rod end.

Styles 4, 8, and 9 are catalog standards
Specify Style 3 for any special piston rod end.

Double Rod Cylinders

For double rod cylinders, specify rod number and rod end symbols for both piston rods. A typical double rod model number would be:

6" KJ-2AU14A/14AX12"

*Required for Basic Cylinder Model Number
Dark Arrows Indicate Basic Minimum Model Number

‡Specify XI dimension
†In case of Stop Tube, call out gross stroke length.

Cylinder serial numbers are factory production record numbers and are assigned to each cylinder, in addition to the model number.