Parker Pneumatic

Mini Cylinders
For Packaging, Indexing and Clamping

Section F

Mini Cylinders

Parker Hannifin Corporation
Pneumatic Division
Richland, Michigan
www.parker.com/pneumatic

TKY-H Series, Spring Extended Cylinder

TKY-O Series, Spring Retracted Cylinder

TKY-W Series, Double Acting

TKY-H

Features

- **Space Saving Design**
- **Optimum Model can be Selected According to the Cylinder Diameter and Stroke**
- **Body has Through Holes for Mounting**
- **Female Rod Thread**
- **Hose Barb Fittings Included**
- **Maximum Operating Pressure: 87 PSI (0.6 MPa)**
- **Ambient Temperature: 32° to 140°F (0° to 60°C)**
  No Freezing Allowed

Characteristics

The TKY-H is a single acting, spring extend, mini-cylinder with a hose barb fitting installed in the rod end of the cylinder. Cylinders have standard female rod thread and two through holes for ease of mounting, no brackets required. Parker Convum Air Cylinders can meet any of your requirements for clamping, gripping, stopping, pressing, etc., in applications where space is a premium.

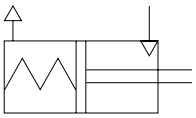

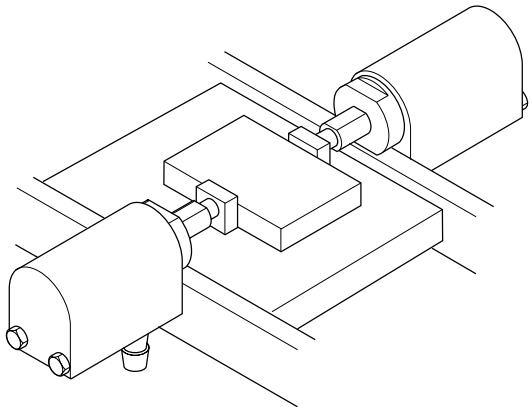

Part Numbers

Part Number	Bore (D)	Stroke	Rod Diameter (d)	Weight lb (g)
TKY-H-4.5x3	0.177 (4.5)	0.118 (3)	0.11 (3)	0.022 (10)
TKY-H-4.5x6	0.177 (4.5)	0.236 (6)	0.118 (3)	0.026 (12)
TKY-H-6x4	0.236 (6)	0.157 (4)	0.149 (3.8)	0.030 (14)
TKY-H-6x8	0.236 (6)	0.320 (8)	0.149 (3.8)	0.042 (19)
TKY-H-8x4	0.320 (8)	0.157 (4)	0.217 (5.5)	0.078 (35.5)
TKY-H-8x8	0.320 (8)	0.320 (8)	0.217 (5.5)	0.088 (40)
TKY-H-10x5	0.394 (10)	0.197 (5)	0.236 (6)	0.086 (39)
TKY-H-10x10	0.394 (10)	0.394 (10)	0.236 (6)	0.110 (50)

Inches (mm)

Normally Closed Air Supply

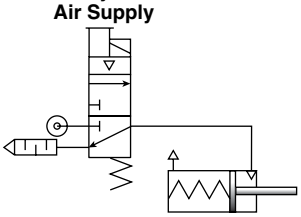

Normally Open Air Supply

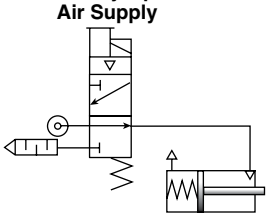

Parker Hannifin Corporation
Pneumatic Division
Richland, Michigan
www.parker.com/pneumatic

Retract Force of TKY-H, lb_f (N)

Part Number	Area (A_2) In² (mm²)	Zero Stroke lbf (N)	Full Retract (S) lbf (N)	Operating Pressure (P) PSI (MPa)			
				30 (0.2)	45 (0.3)	60 (0.4)	75 (0.5)
TKY-H-4.5x3	0.01 (8.84)	0.33 (1.47)	0.46 (2.06)	*	*	0.36 (1.58)	0.57 (2.51)
TKY-H-4.5x6	0.01 (8.84)	0.29 (1.27)	0.44 (1.96)	*	*	0.38 (1.67)	0.59 (2.60)
TKY-H-6x4	0.03 (16.94)	0.53 (2.35)	0.86 (3.82)	*	*	0.72 (3.17)	1.11 (4.88)
TKY-H-6x8	0.03 (16.94)	0.75 (3.33)	1.19 (5.3)	*	*	0.39 (1.72)	0.78 (3.43)
TKY-H-8x4	0.04 (26.51)	1.01 (4.51)	1.45 (6.47)	*	0.4 (1.76)	1.02 (4.49)	1.63 (7.17)
TKY-H-8x8	0.04 (26.51)	1.15 (5.1)	1.50 (6.67)	*	0.35 (1.54)	0.97 (4.27)	1.58 (6.95)
TKY-H-10x5	0.08 (50.27)	1.21 (5.39)	2.05 (9.12)	*	1.46 (6.42)	2.62 (11.53)	3.79 (16.68)
TKY-H-10x10	0.08 (50.27)	1.23 (5.49)	1.83 (8.14)	*	1.68 (7.39)	2.84 (12.50)	4.01 (17.64)

* Cylinders may not have full stroke at these pressures.

Retract Force of TKY-H

Retract Force (F_R) is calculated by multiplying the effective pressure area of the piston by the air pressure and subtracting spring restoration forces.

Retract Force = $F_R = (A_2 \times P - S)$

A_2: Pressurized Area on the Retract Side (mm²)
$A_2 = 0.7854 \times (D^2 - d^2)$

D: Inner Diameter of Cylinder (mm)

d: Diameter of Cylinder Rod (mm)

P: Operating Air Pressure (MPa)

S: Restoration Force of Spring

Retract force does not account for the pressure loss stemming from the frictional resistance of the cylinder piston and pressure loss due to piping resistance.

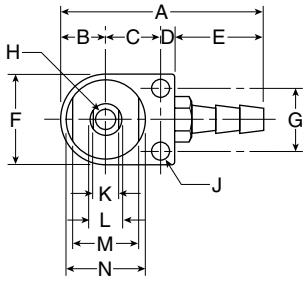

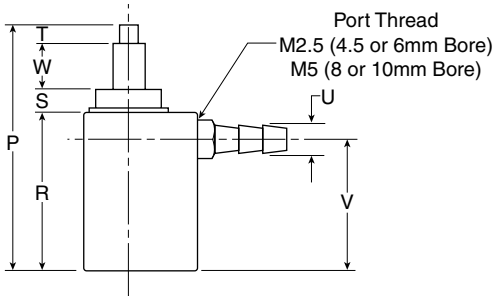

Dimensions

Part Number	A	B	C	D	E	F	G	H	J	K	L	M	N	P	R	S	T	U	V	W	Wt. oz (g)
TKY-H-4.5x3	0.85 (21.6)	0.22 (5.5)	0.19 (5)	0.10 (2.5)	0.30 (7.6)	0.43 (11)	0.24 (6)	M2x0.4 0.14 (3.5) Dp	0.11 Dia (Ø 2.7)	0.10 (2.6)	0.12 Dia (Ø 3)	0.28 (7)	0.31 Dia (Ø 8)	0.91 (23)	0.57 (14.6)	0.09 (2.4)	0.12 (3)	0.11 Dia (Ø 2.8)	0.43 (11)	0.12 (3)	0.28 (8)
TKY-H-4.5x6	0.85 (21.6)	0.22 (5.5)	0.24 (6)	0.10 (2.5)	0.30 (7.6)	0.43 (11)	0.24 (6)	M2x0.4 0.14 (3.5) Dp	0.11 Dia (Ø 2.7)	0.10 (2.6)	0.12 Dia (Ø 3)	0.28 (7)	0.31 Dia (Ø 8)	1.26 (32)	0.81 (20.6)	0.09 (2.4)	0.12 (3)	0.11 Dia (Ø 2.8)	0.70 (17)	0.24 (6)	0.35 (10)
TKY-H-6x4	0.95 (24.1)	0.26 (6.5)	0.28 (7)	0.12 (3)	0.30 (7.6)	0.51 (13)	0.28 (7)	M2.5x0.4 0.16 (4) Dp	0.13 Dia (Ø 3.2)	0.13 (3.4)	0.15 Dia (Ø 3.8)	0.31 (8)	0.35 Dia (Ø 9)	1.06 (27)	0.70 (17)	0.12 (3)	0.12 (3)	0.11 Dia (Ø 2.8)	0.55 (14)	0.16 (4)	0.42 (12)
TKY-H-6x8	0.95 (24.1)	0.26 (6.5)	0.28 (7)	0.12 (3)	0.30 (7.6)	0.51 (13)	0.28 (7)	M2.5x0.4 0.16 (4) Dp	0.13 Dia (Ø 3.2)	0.13 (3.4)	0.15 Dia (Ø 3.8)	0.31 (8)	0.35 Dia (Ø 9)	1.57 (40)	1.02 (26)	0.12 (3)	0.12 (3)	0.11 Dia (Ø 2.8)	0.91 (23)	0.31 (8)	0.60 (17)
TKY-H-8x4	1.42 (36)	0.31 (8)	0.35 (9)	0.12 (3)	0.63 (16)	0.63 (16)	0.39 (10)	M3x0.5 0.19 (5) Dp	0.13 Dia (Ø 3.2)	0.18 (4.5)	0.22 Dia (Ø 5.5)	0.47 (12)	0.55 Dia (Ø 14)	1.26 (32)	0.83 (21)	0.16 (4)	0.12 (3)	0.19 Dia (Ø 5)	0.63 (16)	0.16 (4)	1.04 (29.5)
TKY-H-8x8	1.42 (36)	0.31 (8)	0.35 (9)	0.12 (3)	0.63 (16)	0.63 (16)	0.39 (10)	M3x0.5 0.19 (5) Dp	0.13 Dia (Ø 3.2)	0.18 (4.5)	0.22 Dia (Ø 5.5)	0.47 (12)	0.55 Dia (Ø 14)	1.69 (43)	1.10 (28)	0.16 (4)	0.12 (3)	0.19 Dia (Ø 5)	0.91 (23)	0.31 (8)	1.27 (36)
TKY-H-10x5	1.46 (37)	0.35 (9)	0.35 (9)	0.12 (3)	0.63 (16)	0.71 (18)	0.47 (12)	M3x0.5 0.19 (5) Dp	0.13 Dia (Ø 3.2)	0.19 (5)	0.24 Dia (Ø 6)	0.55 (14)	0.63 Dia (Ø 16)	1.34 (34)	0.87 (22)	0.16 (4)	0.12 (3)	0.19 Dia (Ø 5)	0.70 (17)	0.19 (5)	1.23 (35)
TKY-H-10x10	1.46 (37)	0.35 (9)	0.35 (9)	0.12 (3)	0.63 (16)	0.71 (18)	0.47 (12)	M3x0.5 0.19 (5) Dp	0.13 Dia (Ø 3.2)	0.19 (5)	0.24 Dia (Ø 6)	0.55 (14)	0.63 Dia (Ø 16)	1.97 (50)	1.30 (33)	0.16 (4)	0.12 (3)	0.19 Dia (Ø 5)	1.10 (28)	0.39 (10)	1.62 (46)

Inches (mm)

Parker Hannifin Corporation
Pneumatic Division
Richland, Michigan
www.parker.com/pneumatic

TKY-O

Features

- **Space Saving Design**
- **Optimum Model can be Selected According to the Cylinder Diameter and Stroke**
- **Body has Through Holes for Mounting**
- **Female Rod Thread**
- **Hose Barb Fittings Included**
- **Maximum Operating Pressure: 87 PSI (0.6 MPa)**
- **Ambient Temperature: 32° to 140°F (0° to 60°C)**
  No Freezing Allowed

Characteristics

The TKY-O is a single acting, spring return, mini-cylinder with a hose barb fitting installed in the cap end of the cylinder. Cylinders have standard female rod thread and two through holes for ease of mounting, no brackets required. Parker Convum Air Cylinders can meet any of your requirements for clamping, gripping, stopping, pressing, etc., in applications where space is a premium.

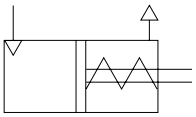

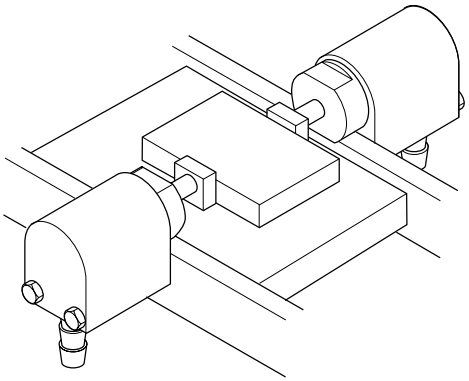

Part Numbers

Part Number	Bore (D)	Stroke	Rod Diameter (d)	Weight lb (g)
TKY-O-4.5x3	0.177 (4.5)	0.118 (3)	0.118 (3)	0.014 (6.5)
TKY-O-4.5x6	0.177 (4.5)	0.236 (6)	0.118 (3)	0.020 (9)
TKY-O-6x4	0.236 (6)	0.157 (4)	0.149 (3.8)	0.024 (11)
TKY-O-6x8	0.236 (6)	0.320 (8)	0.149 (3.8)	0.035 (16)
TKY-O-8x4	0.320 (8)	0.157 (4)	0.217 (5.5)	0.050 (22.5)
TKY-O-8x8	0.320 (8)	0.320 (8)	0.217 (5.5)	0.071 (32)
TKY-O-10x5	0.394 (10)	0.197 (5)	0.236 (6)	0.074 (33.5)
TKY-O-10x10	0.394 (10)	0.394 (10)	0.236 (6)	0.105 (48)

Inches (mm)

Normally Closed Air Supply

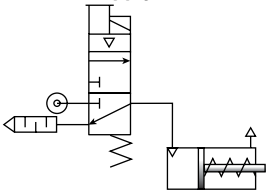

Normally Open Air Supply

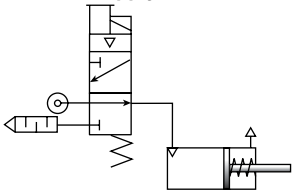

Extend Force of TKY-O, lb_f (N)

Part Number	Area (A_1) In² (mm²)	Zero Stroke lbf (N)	Full Extend (S) lbf (N)	Operating Pressure (P) PSI (MPa)			
				30 (0.2)	45 (0.3)	60 (0.4)	75 (0.5)
TKY-O-4.5x3	0.02 (5.91)	0.33 (1.47)	0.46 (2.06)	*	0.65 (2.86)	1.02 (4.495)	1.39 (6.12)
TKY-O-4.5x6	0.02 (5.91)	0.29 (1.27)	0.44 (1.96)	*	0.67 (2.95)	1.04 (4.58)	1.41 (6.20)
TKY-O-6x4	0.04 (28.28)	0.53 (2.35)	0.86 (3.82)	*	1.11 (4.88)	1.77 (7.79)	2.43 (10.69)
TKY-O-6x8	0.04 (28.28)	0.75 (3.33)	1.19 (5.3)	*	0.78 (3.43)	1.44 (6.34)	2.10 (9.24)
TKY-O-8x4	0.08 (50.27)	1.01 (4.51)	1.45 (6.47)	0.89 (3.92)	2.06 (9.05)	3.23 (14.21)	4.39 (19.32)
TKY-O-8x8	0.08 (50.27)	1.15 (5.1)	1.50 (6.67)	0.84 (3.70)	2.01 (8.84)	3.18 (13.99)	4.34 (19.10)
TKY-O-10x5	0.12 (78.54)	1.21 (5.39)	2.05 (9.12)	1.60 (7.04)	3.43 (15.09)	5.25 (23.10)	7.08 (31.15)
TKY-O-10x10	0.12 (78.54)	1.23 (5.49)	1.83 (8.14)	1.82 (8.01)	3.65 (16.06)	5.47 (24.07)	7.30 (32.12)

* Cylinders may not have full stroke at these pressures.

Extend Force of TKY-H

Extend Force (F_E) is calculated by multiplying the effective pressure area of the piston by the air pressure and subtracting spring restoration forces.

Extend Force = $F_E = (A_1 \times P - S)$

A_1: Pressurized Area on the Extend Side (mm²)
$A_1 = 0.7854 \times (D^2)$

D: Inner Diameter of Cylinder (mm)

P: Operating Air Pressure (MPa)

S: Restoration Force of Spring

Extend force does not account for the pressure loss stemming from the frictional resistance of the cylinder piston and pressure loss due to piping resistance.

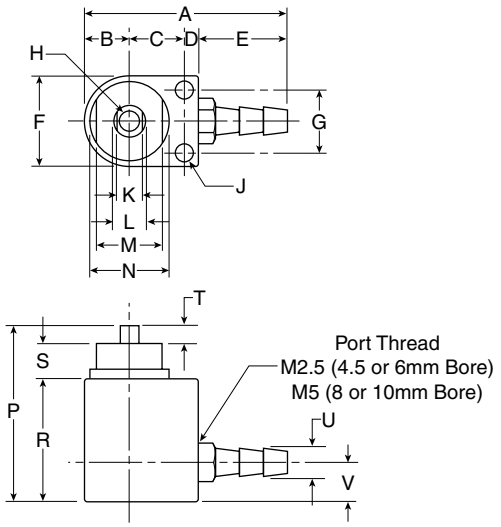

Dimensions

Part Number	A	B	C	D	E	F	G	H	J	K	L	M	N	P	R	S	T	U	V	Wt. oz (g)
TKY-O-4.5x3	0.85 (21.5)	0.22 (5.5)	0.24 (6)	0.10 (2.5)	0.30 (7.6)	0.43 (11)	0.24 (6)	M2x0.4 0.14 (3.5) Dp	0.11 Dia (Ø 2.7)	0.10 (2.6)	0.12 Dia (Ø 3)	0.28 (7)	0.31 Dia (Ø 8)	0.71 (18)	0.39 (10)	0.19 (5)	0.12 (3)	0.11 Dia (Ø 2.8)	0.19 (5)	0.23 (6.5)
TKY-O-4.5x6	0.85 (21.5)	0.22 (5.5)	0.24 (6)	0.10 (2.5)	0.30 (7.6)	0.43 (11)	0.24 (6)	M2x0.4 0.14 (3.5) Dp	0.11 Dia (Ø 2.7)	0.10 (2.6)	0.12 Dia (Ø 3)	0.28 (7)	0.31 Dia (Ø 8)	0.94 (24)	0.63 (16)	0.19 (5)	0.12 (3)	0.11 Dia (Ø 2.8)	0.19 (5)	0.32 (9)
TKY-O-6x4	0.95 (24.1)	0.26 (6.5)	0.28 (7)	0.12 (3)	0.30 (7.6)	0.51 (13)	0.28 (7)	M2.5x0.4 0.16 (4) Dp	0.13 Dia (Ø 3.2)	0.13 (3.4)	0.15 Dia (Ø 3.8)	0.31 (8)	0.35 Dia (Ø 9)	0.87 (22)	0.55 (14)	0.19 (5)	0.12 (3)	0.11 Dia (Ø 2.8)	0.24 (6)	0.39 (11)
TKY-O-6x8	0.95 (24.1)	0.26 (6.5)	0.28 (7)	0.12 (3)	0.30 (7.6)	0.51 (13)	0.28 (7)	M2.5x0.4 0.16 (4) Dp	0.13 Dia (Ø 3.2)	0.13 (3.4)	0.15 Dia (Ø 3.8)	0.31 (8)	0.35 Dia (Ø 9)	1.22 (31)	0.91 (23)	0.19 (5)	0.12 (3)	0.11 Dia (Ø 2.8)	0.24 (6)	0.56 (16)
TKY-O-8x4	1.42 (36)	0.31 (8)	0.35 (9)	0.12 (3)	0.63 (16)	0.63 (16)	0.39 (10)	M3x0.5 0.19 (5) Dp	0.13 Dia (Ø 3.2)	0.18 (4.5)	0.22 Dia (Ø 5.5)	0.47 (12)	0.55 Dia (Ø 14)	0.91 (23)	0.55 (14)	0.24 (6)	0.12 (3)	0.19 Dia (Ø 5)	0.28 (7)	0.79 (22.5)
TKY-O-8x8	1.42 (36)	0.31 (8)	0.35 (9)	0.12 (3)	0.63 (16)	0.63 (16)	0.39 (10)	M3x0.5 0.19 (5) Dp	0.13 Dia (Ø 3.2)	0.18 (4.5)	0.22 Dia (Ø 5.5)	0.47 (12)	0.55 Dia (Ø 14)	1.22 (31)	0.87 (22)	0.24 (6)	0.12 (3)	0.19 Dia (Ø 5)	0.28 (7)	1.13 (32)
TKY-O-10x5	1.46 (37)	0.35 (9)	0.35 (9)	0.12 (3)	0.63 (16)	0.71 (18)	0.47 (12)	M3x0.5 0.19 (5) Dp	0.13 Dia (Ø 3.2)	0.19 (5)	0.24 Dia (Ø 6)	0.55 (14)	0.63 Dia (Ø 16)	1.10 (28)	0.71 (18)	0.28 (7)	0.12 (3)	0.19 Dia (Ø 5)	0.31 (8)	1.18 (33.5)
TKY-O-10x10	1.46 (37)	0.35 (9)	0.35 (9)	0.12 (3)	0.63 (16)	0.71 (18)	0.47 (12)	M3x0.5 0.19 (5) Dp	0.13 Dia (Ø 3.2)	0.19 (5)	0.24 Dia (Ø 6)	0.55 (14)	0.63 Dia (Ø 16)	1.54 (39)	1.14 (29)	0.28 (7)	0.12 (3)	0.19 Dia (Ø 5)	0.31 (8)	1.69 (48)

Inches (mm)

Parker Hannifin Corporation
Pneumatic Division
Richland, Michigan
www.parker.com/pneumatic

TKY-W

Features

- **Space Saving Design**
- **Optimum Model can be Selected According to the Cylinder Diameter and Stroke**
- **Body has Through Holes for Mounting**
- **Female Rod Thread**
- **Hose Barb Fittings Included**
- **Maximum Operating Pressure: 87 PSI (0.6 MPa)**
- **Ambient Temperature: 32° to 140°F (0° to 60°C)**
  No Freezing Allowed

Characteristics

The TKY-W is a double acting, mini-cylinder with a hose barb fittings installed in the cap and rod end of the cylinder. Cylinders have standard female rod thread and two through holes for ease of mounting, no brackets required. Parker Convum Air Cylinders can meet any of your requirements for clamping, gripping, stopping, pressing, etc., in applications where space is a premium.

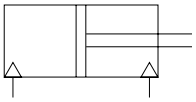

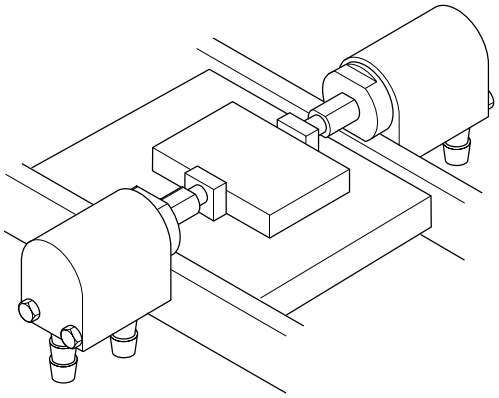

Part Numbers

Part Number	Bore (D)	Stroke	Rod Diameter (d)	Weight lb (g)
TKY-W-4.5x3	0.177 (4.5)	0.118 (3)	0.118 (3)	0.018 (8)
TKY-W-4.5x6	0.177 (4.5)	0.236 (6)	0.118 (3)	0.018 (8)
TKY-W-6x4	0.236 (6)	0.157 (4)	0.149 (3.8)	0.026 (12)
TKY-W-6x8	0.236 (6)	0.320 (8)	0.149 (3.8)	0.031 (14)
TKY-W-8x4	0.320 (8)	0.157 (4)	0.217 (5.5)	0.068 (31)
TKY-W-8x8	0.320 (8)	0.320 (8)	0.217 (5.5)	0.073 (33)
TKY-W-10x5	0.394 (10)	0.197 (5)	0.236 (6)	0.082 (37)
TKY-W-10x10	0.394 (10)	0.394 (10)	0.236 (6)	0.090 (41)

Inches (mm)

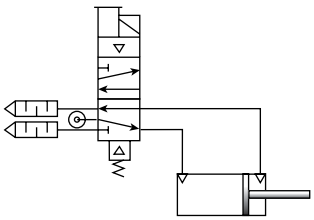

Parker Hannifin Corporation
Pneumatic Division
Richland, Michigan
www.parker.com/pneumatic

Extend Force of TKY-W, lb_f (N)

Part Number	Extend Area (A_1) In² (mm²)	Operating Pressure (P) PSI (MPa)			
		30 (0.2)	45 (0.3)	60 (0.4)	75 (0.5)
		Extend Force			
TKY-W-4.5	0.02 (5.91)	0.74 (3.26)	1.11 (4.88)	1.48 (6.51)	1.85 (8.14)
TKY-W-6	0.04 (28.28)	1.32 (5.80)	1.97 (4.67)	2.63 (11.57)	3.29 (14.48)
TKY-W-8	0.08 (50.27)	2.34 (10.30)	3.51 (15.44)	4.68 (20.59)	5.84 (25.70)
TKY-W-10	0.12 (78.54)	3.65 (16.06)	5.48 (24.11)	7.30 (32.12)	9.13 (40.17)

Retract Force of TKY-W, lb_f (N)

Part Number	Retract Area (A_2) In² (mm²)	Operating Pressure (P) PSI (MPa)			
		30 (0.2)	45 (0.3)	60 (0.4)	75 (0.5)
		Retract Force			
TKY-W-4.5	0.01 (8.84)	0.41 (1.80)	0.62 (2.73)	0.82 (3.61)	1.03 (5.43)
TKY-W-6	0.03 (16.93)	0.79 (3.48)	1.18 (5.19)	1.57 (6.91)	1.97 (8.67)
TKY-W-8	0.04 (28.28)	1.23 (5.41)	1.85 (8.14)	2.47 (10.87)	3.08 (13.55)
TKY-W-10	0.8 (50.27)	2.34 (10.30)	3.51 (15.44)	4.67 (20.55)	5.84 (25.70)

Force of TKY-W

Force (F_E, F_R) is calculated by multiplying the effective pressure area of the piston by the air pressure.

Extend Force = $F_E = (A_1 \times P)$

Retract Force = $F_R = (A_2 \times P)$

A_1: Pressurized Area on the Extend Side (mm²)
$A_1 = .7854 \times (D^2)$

A_2: Pressurized Area on the Retract Side (mm²)
$A_2 = .7854 \times (D^2 - d^2)$

D: Inner Diameter of Cylinder (mm)

d: Diameter of Cylinder Rod (mm)

P: Operating Air Pressure (MPa)

Force does not account for the pressure loss stemming from the frictional resistance of the cylinder piston and pressure loss due to piping resistance.

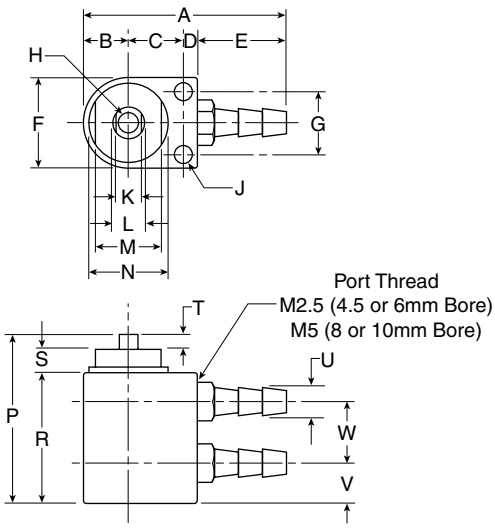

Dimensions

Part Number	A	B	C	D	E	F	G	H	J	K	L	M	N	P	R	S	T	U	V	W	Wt. oz (g)
TKY-W-4.5x3	0.85 (21.6)	0.22 (5.5)	0.24 (6)	0.10 (2.5)	0.30 (7.6)	0.43 (11)	0.24 (6)	M2x0.4 0.14 (3.5) Dp	0.11 Dia (Ø 2.7)	0.10 (2.6)	0.12 Dia (Ø 3)	0.28 (7)	0.31 Dia (Ø 8)	0.79 (20)	0.57 (14.6)	0.09 (2.4)	0.12 (3)	0.11 Dia (Ø 2.8)	0.19 (5)	0.24 (6)	0.28 (8)
TKY-W-4.5x6	0.85 (21.6)	0.22 (5.5)	0.24 (6)	0.10 (2.5)	0.30 (7.6)	0.43 (11)	0.24 (6)	M2x0.4 0.14 (3.5) Dp	0.11 Dia (Ø 2.7)	0.10 (2.6)	0.12 Dia (Ø 3)	0.28 (7)	0.31 Dia (Ø 8)	0.79 (20)	0.57 (14.6)	0.09 (2.4)	0.12 (3)	0.11 Dia (Ø 2.8)	0.19 (5)	0.24 (6)	0.28 (8)
TKY-W-6x4	0.95 (24.1)	0.26 (6.5)	0.28 (7)	0.12 (3)	0.30 (7.6)	0.51 (13)	0.28 (7)	M2.5x0.4 0.16 (4) Dp	0.13 Dia (Ø 3.2)	0.13 (3.4)	0.15 Dia (Ø 3.8)	0.31 (8)	0.35 Dia (Ø 9)	0.91 (23)	0.70 (17)	0.12 (3)	0.12 (3)	0.11 Dia (Ø 2.8)	0.24 (6)	0.31 (8)	0.42 (12)
TKY-W-6x8	0.95 (24.1)	0.26 (6.5)	0.28 (7)	0.12 (3)	0.30 (7.6)	0.51 (13)	0.28 (7)	M2.5x0.4 0.16 (4) Dp	0.13 Dia (Ø 3.2)	0.13 (3.4)	0.15 Dia (Ø 3.8)	0.31 (8)	0.35 Dia (Ø 9)	1.06 (27)	0.83 (21)	0.12 (3)	0.12 (3)	0.11 Dia (Ø 2.8)	0.24 (6)	0.47 (12)	0.49 (14)
TKY-W-8x4	1.42 (36)	0.31 (8)	0.35 (9)	0.12 (3)	0.63 (16)	0.63 (16)	0.39 (10)	M3x0.5 0.19 (5) Dp	0.13 Dia (Ø 3.2)	0.18 (4.5)	0.22 Dia (Ø 5.5)	0.47 (12)	0.55 Dia (Ø 14)	1.10 (28)	0.83 (21)	0.16 (4)	0.12 (3)	0.19 Dia (Ø 5)	0.28 (7)	0.35 (9)	1.09 (31)
TKY-W-8x8	1.42 (36)	0.31 (8)	0.35 (9)	0.12 (3)	0.63 (16)	0.63 (16)	0.39 (10)	M3x0.5 0.19 (5) Dp	0.13 Dia (Ø 3.2)	0.18 (4.5)	0.22 Dia (Ø 5.5)	0.47 (12)	0.55 Dia (Ø 14)	1.18 (30)	0.91 (23)	0.16 (4)	0.12 (3)	0.19 Dia (Ø 5)	0.28 (7)	0.43 (11)	1.16 (33)
TKY-W-10x5	1.46 (37)	0.35 (9)	0.35 (9)	0.12 (3)	0.63 (16)	0.71 (18)	0.47 (12)	M3x0.5 0.19 (5) Dp	0.13 Dia (Ø 3.2)	0.19 (5)	0.24 Dia (Ø 6)	0.55 (14)	0.63 Dia (Ø 16)	1.14 (29)	0.87 (22)	0.16 (4)	0.12 (3)	0.19 Dia (Ø 5)	0.31 (8)	0.35 (9)	1.31 (37)
TKY-W-10x10	1.46 (37)	0.35 (9)	0.35 (9)	0.12 (3)	0.63 (16)	0.71 (18)	0.47 (12)	M3x0.5 0.19 (5) Dp	0.13 Dia (Ø 3.2)	0.19 (5)	0.24 Dia (Ø 6)	0.55 (14)	0.63 Dia (Ø 16)	1.30 (33)	1.02 (26)	0.16 (4)	0.12 (3)	0.19 Dia (Ø 5)	0.31 (8)	0.51 (13)	1.45 (41)

Inches (mm)

⚠ Cautions

1. **Cylinders do not require lubrication. If lubricated, use an oil corresponding to ISO VG32 (JIS turbine oil #90) or to ISO VG46. Do not use machine oil as it may cause the seals to be damaged.**
2. **Before installation, flush the piping so the inside is clean and free of dirt and chips.**
3. **During operation, the load weight on the piston rod of the cylinder should be applied in the axial direction. A load applied in a lateral direction may cause the piston rod to bend or the threads at the rod end to break.**
4. **If a single action cylinder is used, do not apply an excessive load to the piston rod when it is pulled. Excessive load may damage spring.**
5. **Do not use cylinders in salt water, an acid or alkaline environment.**
6. **Remove dirt, dust and moisture content from compressed air using air filters and air dryers. Apply only clean, compressed air to the cylinder.**
7. **The application of any pressure exceeding the maximum operating pressure is dangerous. Pay close attention to the supplied compressed air pressure.**