P5T Series

Short Stroke Thruster

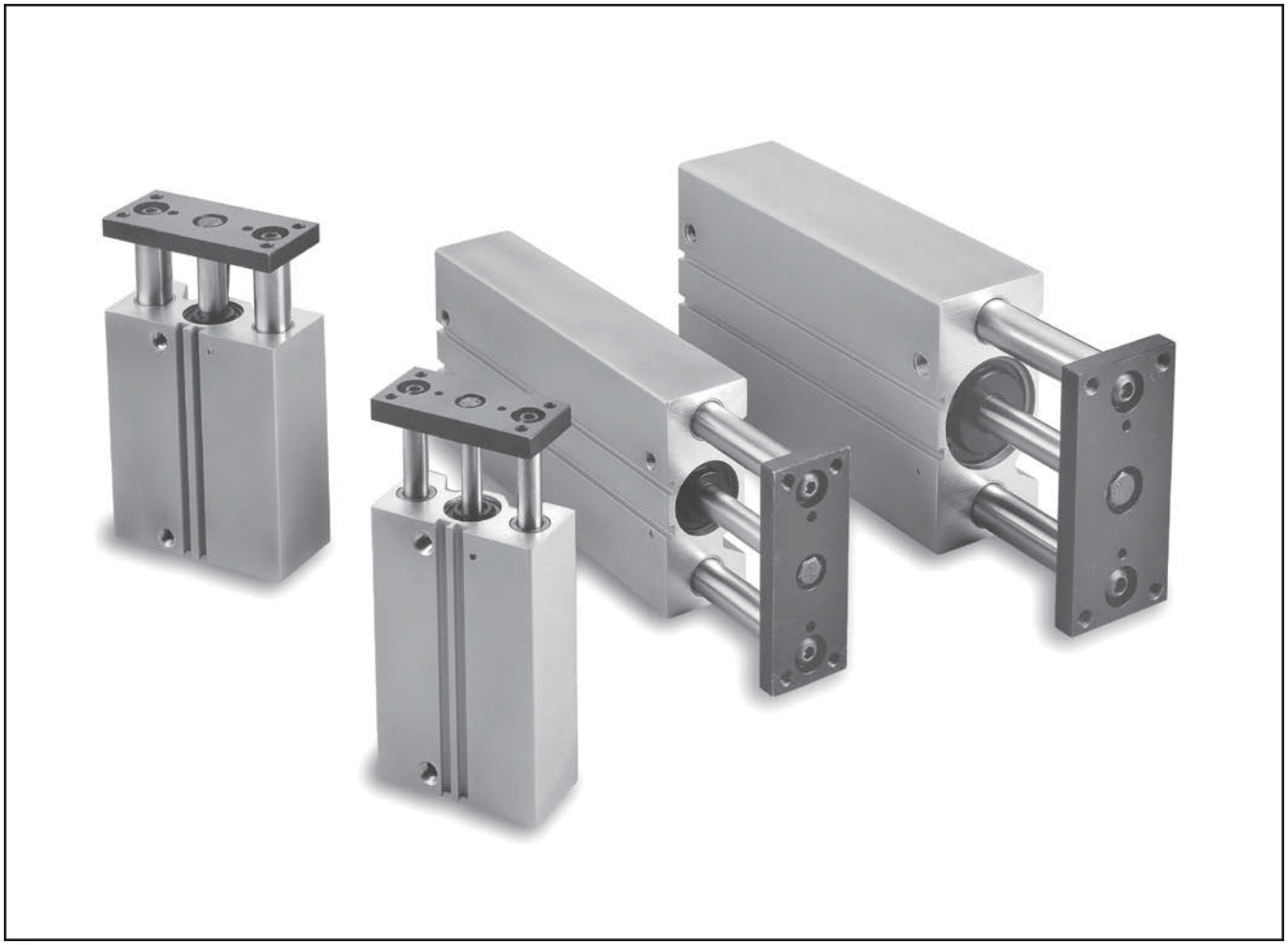

Contents

Features F6
Ordering Information F7
Specifications F8-F9
Engineering Data F10-F17
Dimensions F18-F19
Options F20-F24
Sensors F25
Service Kits F26

Parker Hannifin Corporation
Pneumatic Division
Wadsworth, Ohio
www.parker.com/pneumatics

800.696.6165
www.comoso.com

A074

Compact, One-Piece Body
Provides economy and minimum package size by integrating a low profile cylinder and support shafts into a single body.

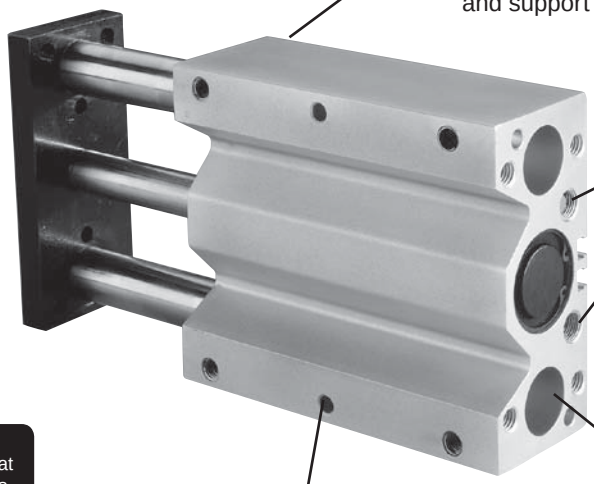

Rear Porting
Rear and side porting are available as options.

3D CAD FILES
available for download at
parker.com/pneumatics

Standard Dowel Holes
Dowel holes on body provide simple, economical and precise mounting.

Internal Bumpers
Are standard on all units. These provide energy dissipation and noise reduction which result in longer operating life.

F

Top Porting
Top porting is standard. Optional side and rear porting is available.

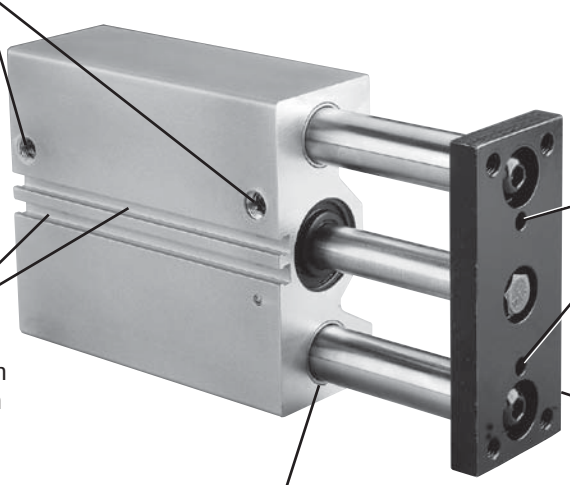

Dowel Holes
Standard dowel holes provide precision mounting and alignment on the tool plate.

Sensor Grooves
Allow reed or solid state sensors to be mounted flush to the body. Magnetic piston is standard.

Tooling Plate
Precision machined from steel, the tooling plate is thick and rigid to provide a durable connection.

Composite Bushings or Linear Ball Bearings
Parker uses a PTFE impregnated **composite bushing** which serves as a lubrication reservoir. This results in higher load carrying capabilities, both dynamic and static, with excellent resistance to shock loading. The impregnated lubricant also makes the bearings more dirt tolerant. **Composite bushings with oversized shafting** are available for high impact loads. Optional **recirculating ball bearings** provide precision operation with very low friction and wear.

Parker Hannifin Corporation
Pneumatic Division
Wadsworth, Ohio
www.parker.com/pneumatics

800.696.6165 www.comoso.com

Model Code and Ordering Information

Example: P5T-J032DHSN100

P5T	–	J	032	D	H	S	N	100

Shaft / Bearing Type

J	Composite Bearing, Chrome Plated Shaft (Std)
H	Ball Bearing, Stainless Steel Shaft
C	Composite Bearing, Stainless Steel Shaft

Bore Size

016	16mm
020	20mm
025	25mm
032	32mm
040	40mm
050	50mm
063	63mm
080	80mm
100	100mm

Port Location / Mounting

D	Dowel Holes, Top Ports (Std)
R	Dowel Holes, Rear Ports, Top Plugged (Std)
S	Dowel Holes, Side Ports [1] and Top Ports

Port Style

H	NPTF (Std)
G	BSPP
P	Flow Control, BSPP Port, Prestolok Tube (mm) [1]
F	Flow Control, NPTF Port, Prestolok Tube (inch) [1]
B	Flow Control, BSPP [1]
N	Flow Control, NPTF [1]

Seals

S	Nitrile (Std)
F	Fluorocarbon (High Temp)

Options

N	None (Std)
B	High Load Bearings [2]
A	Bumpers, Adjustable Stop Collars (Extend Only) and Dual Tool Plate (Side Ports Rec) [3, 4]
E	Bumpers and Adjustable Stop Collars (Extend Only) [3]
G	High Load Bearings, Bumpers and Adjustable Stop Collars (Extend Only) [2, 3]
D	Dual Tool Plate [3, 4]
X	Special

Stroke

See table below for standard stroke lengths. Consult factory for special stroke lengths.

NOTES:

1 Cannot combine flow controls, side ports and 25mm stroke.
2 Not available with rear mounting and ports.
3 Not available with rear port location (R).
4 Includes high load bearings as standard.

Bore Size (mm)	Standard Strokes (mm)*									
	10	25	40	50	75	100	125	150	175	200
16	●	●	●	●	●	●				
20		●	●	●	●	●	●			
25		●		●	●	●	●	●		
32 - 100		●		●	●	●	●	●	●	●

*Consult factory for special stroke lengths.

Parker
800.696.6165
www.comoso.com
Parker Hannifin Corporation
Pneumatic Division
Wadsworth, Ohio
www.parker.com/pneumatics

A074

Specifications

- Maximum operating pressure: 1 MPa (10 bar/145 psi)
- Operating characteristics: Double acting
- Support rod sizes: ∅8 to 35mm
- Mounting: Unrestricted
- Operating temperature range (cylinder):
  - Nitrile seals (standard) -18° to 74°C (0° to 165°F)
  - Fluorocarbon seals* -18° to 121°C (0° to 250°F)
- Filtration requirement: 40 micron, filtered dry air

* See Fluorocarbon seal option for high temperature applications.

Construction

Body ..... Aluminum
End Caps ..... Aluminum
Tool Plate ..... Steel
Piston Rod ..... Stainless Steel
Support Rods ..... Steel (Chrome Plated)
Rod Bolts ..... Steel

Mounting Bolts

Bore Size	Socket Head Cap
16	M5 x .8
20	M5 x .8
25	M6 x 1.0
32	M8 x 1.25
40	M8 x 1.25
50	M10 x 1.5
63	M10 x 1.5
80	M12 x 1.75
100	M14 x 2.0

Note: *When the P5T is used as an impact stopping system, mounting bolt thread engagement should be 1.5 times bolt diameter.*

F

Quick Reference Data

Model (Bore Size)	Piston Rod (mm)	Bushings	Support Rods (mm)	Piston Bore Ares Non-Rod Side		Max Stroke (mm)	Theoretical Force			
							Extend @75 PSI (0.5 MPa)		Retract @75 PSI (0.5 MPa)	
				mm²	in²		N	lb	N	lb
16	8	Ball	8	200	0.31	100	105	23.6	77.4	17.4
		Composite	10	200	0.31	100	105	23.6	77.4	17.4
20	10	Ball	10	316	0.49	125	164	36.8	123	27.8
		Composite	12	316	0.49	125	164	36.8	123	27.8
25	10	Ball	12	490	0.76	150	254	57	213.5	48
		Composite	16	490	0.76	150	254	57	213.5	48
32	16	Ball	16	804	1.25	200	402	93	302	70
		Composite	20	804	1.25	200	402	93	302	70
40	16	Ball	16	1257	1.95	200	628	146	528	123
		Composite	20	1257	1.95	200	628	146	528	123
50	20	Ball	20	1964	3.04	200	982	228	825	192
		Composite	25	1964	3.04	200	982	228	825	192
63	20	Ball	20	3117	4.83	200	1559	362	1492	326
		Composite	25	3117	4.83	200	1559	362	1492	326
80	25	Ball	25	5027	7.79	200	2513	584	2268	527
		Composite	30	5027	7.79	200	2513	584	2268	527
100	25	Ball	30	7854	12.17	200	3927	913	3574	856
		Composite	35	7854	12.17	200	3927	913	3574	856

800.696.6165 www.comoso.com

Parker Hannifin Corporation
Pneumatic Division
Wadsworth, Ohio
www.parker.com/pneumatics

Units with Composite Bushings

Weights in kg (lb)

Model	Standard Stroke (mm)									
	10	25	40	50	75	100	125	150	175	200
16	0.35 (0.77)	0.43 (0.95)	0.51 (1.13)	0.57 (1.25)	0.70 (1.54)	0.84 (1.84)	–	–	–	–
20	–	0.76 (1.66)	0.86 (1.90)	0.94 (2.06)	1.11 (2.45)	1.29 (2.85)	1.47 (3.24)	–	–	–
25	–	1.13 (2.48)	–	1.39 (3.05)	1.65 (3.63)	1.91 (4.20)	2.17 (4.77)	2.43 (5.35)	–	–
32	–	1.67 (3.68)	–	2.07 (4.55)	2.46 (5.42)	2.86 (6.29)	3.26 (7.17)	3.65 (8.04)	4.05 (8.91)	4.45 (9.78)
40	–	2.00 (4.40)	–	2.42 (5.32)	2.84 (6.25)	3.26 (7.17)	3.68 (8.10)	4.10 (9.02)	4.52 (9.94)	4.84 (10.65)
50	–	2.63 (5.78)	–	3.22 (7.08)	3.81 (8.38)	4.40 (9.69)	4.99 (10.99)	5.59 (12.29)	6.18 (13.59)	6.77 (14.89)
63	–	3.29 (7.24)	–	3.98 (8.75)	4.66 (10.25)	5.34 (11.75)	6.02 (13.25)	6.71 (14.76)	7.39 (16.26)	8.07 (17.76)
80	–	6.06 (13.33)	–	7.12 (15.66)	8.18 (18.00)	9.24 (20.33)	10.30 (22.66)	11.36 (24.99)	12.42 (27.33)	13.48 (29.66)
100	–	10.69 (23.52)	–	12.03 (26.47)	13.37 (29.42)	14.71 (32.37)	16.05 (35.32)	17.39 (38.27)	18.73 (41.22)	20.08 (44.17)

Units with Linear Ball Bushings

Weights in kg (lb)

Model	Standard Stroke (mm)									
	10	25	40	50	75	100	125	150	175	200
16	0.32 (0.70)	0.39 (0.86)	0.46 (1.02)	0.51 (1.13)	0.64 (1.40)	0.76 (1.67)	—	—	—	—
20	—	0.70 (1.53)	0.80 (1.75)	0.86 (1.90)	1.03 (2.26)	1.19 (2.62)	1.36 (2.99)	—	—	—
25	—	0.98 (2.15)	—	1.20 (2.64)	1.43 (3.14)	1.65 (3.64)	1.88 (4.14)	2.11 (4.63)	—	—
32	—	1.51 (3.31)	—	1.86 (4.09)	2.21 (4.86)	2.56 (5.63)	2.91 (6.41)	3.27 (7.18)	3.62 (7.96)	3.97 (8.73)
40	—	1.82 (4.01)	—	2.20 (4.83)	2.57 (5.66)	2.95 (6.49)	3.32 (7.31)	3.70 (8.14)	4.08 (8.97)	4.45 (9.79)
50	—	2.35 (5.17)	—	2.87 (6.32)	3.39 (7.47)	3.92 (8.62)	4.44 (9.76)	4.96 (10.91)	5.48 (12.06)	6.01 (13.21)
63	—	2.99 (6.58)	—	3.60 (7.93)	4.22 (9.28)	4.83 (10.63)	5.45 (11.98)	6.06 (13.33)	6.67 (14.68)	7.29 (16.03)
80	—	5.66 (12.45)	—	6.63 (14.59)	7.61 (16.74)	8.58 (18.88)	9.56 (21.03)	10.53 (23.18)	11.51 (25.32)	12.49 (27.47)
100	—	10.16 (22.36)	—	11.40 (25.09)	12.64 (27.82)	13.89 (30.55)	15.13 (33.28)	16.37 (36.01)	17.61 (38.74)	18.85 (41.46)

800.696.6165 www.comoso.com

Parker Hannifin Corporation
Pneumatic Division
Wadsworth, Ohio
www.parker.com/pneumatics

A074

Horizontal Load Capacity Standard Unit

P5T Series units will have the same load capacity regardless of orientation. The graphs below show maximum load capacity based on a unit life of 10 million cycles .

EXAMPLE: A P5T-16 with “stroke + d” of 75mm and composite bushings would have a load capacity of 50N.

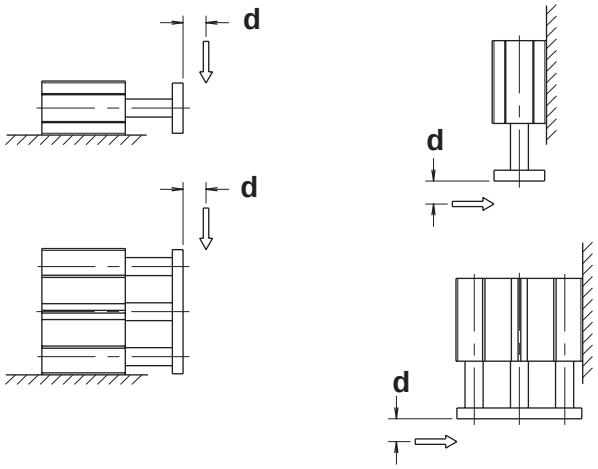

16mm Bore Size

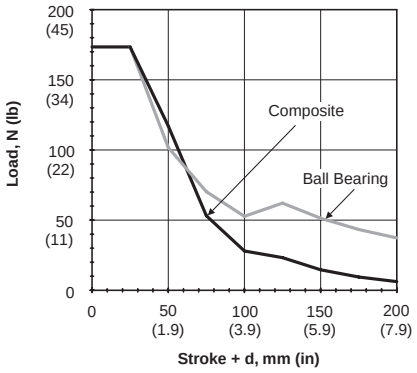

20mm Bore Size

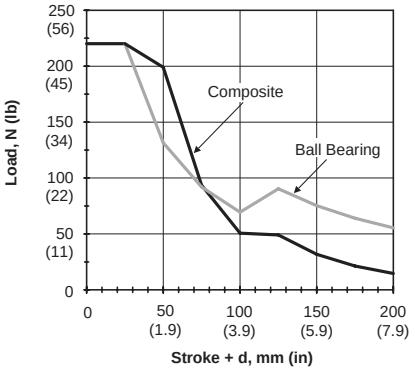

25mm Bore Size

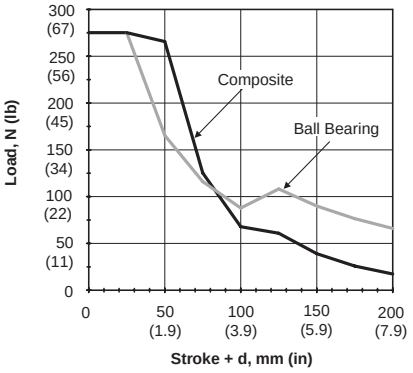

32mm Bore Size

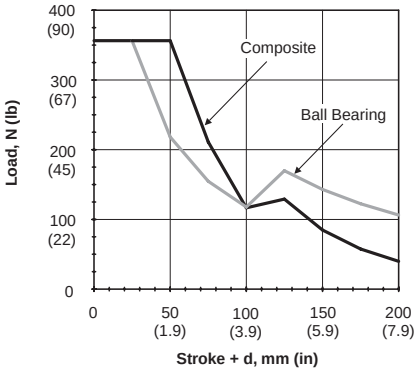

40mm Bore Size

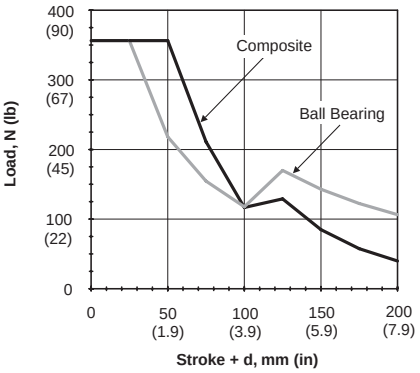

50mm Bore Size

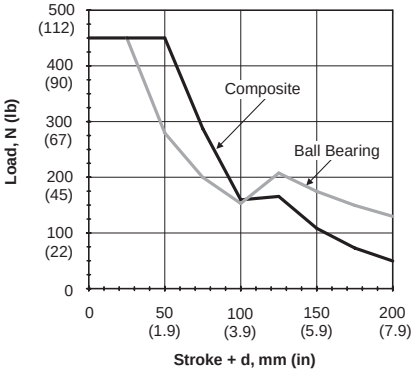

63mm Bore Size

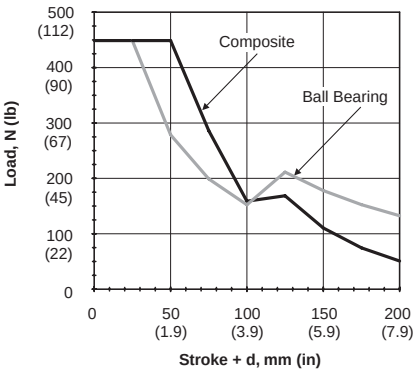

80mm Bore Size

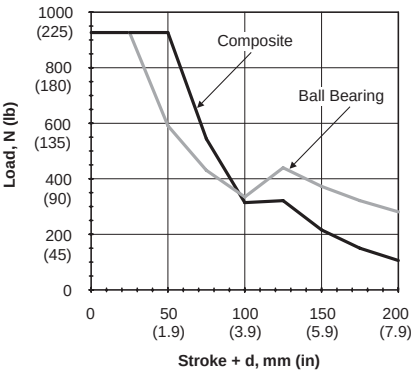

100mm Bore Size

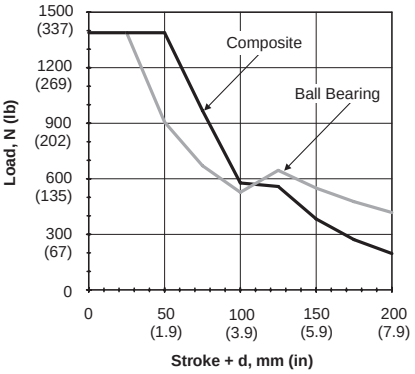

Parker Hannifin Corporation
Pneumatic Division
Wadsworth, Ohio
www.parker.com/pneumatics

800.696.6165 www.comoso.com

Horizontal Load Capacity with High Load Bearings and Dual Tool Plate (D, A, B)

P5T Series units will have the same load capacity regardless of orientation. The graphs below show maximum load capacity based on a unit life of 10 million cycles.

EXAMPLE: A P5T-20 with "stroke + d" of 100mm and high load composite bushings would have a load capacity of 125N.

A074

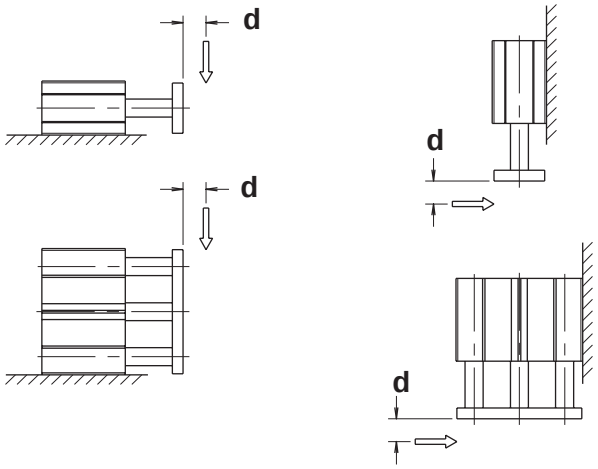

16mm Bore Size

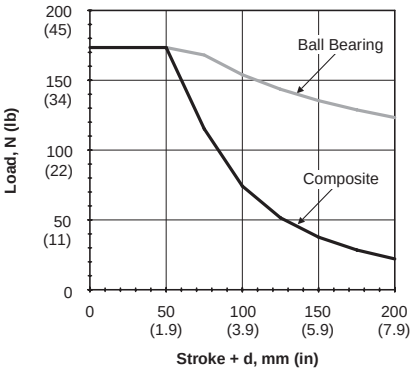

20mm Bore Size

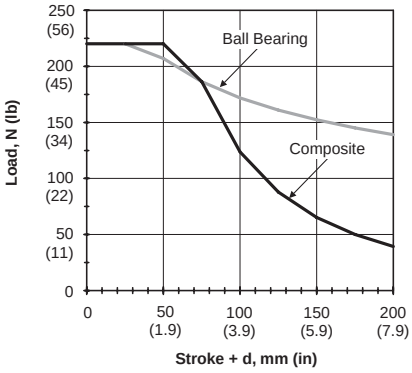

25mm Bore Size

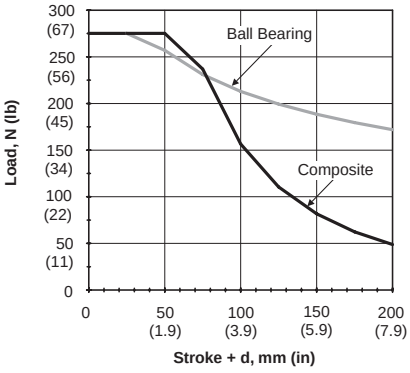

32mm Bore Size

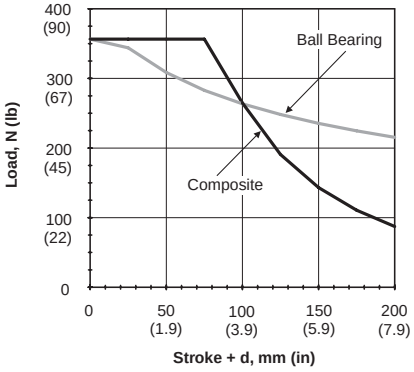

40mm Bore Size

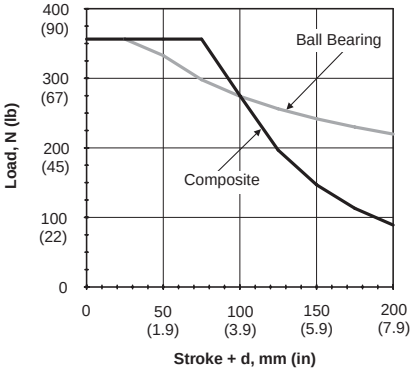

50mm Bore Size

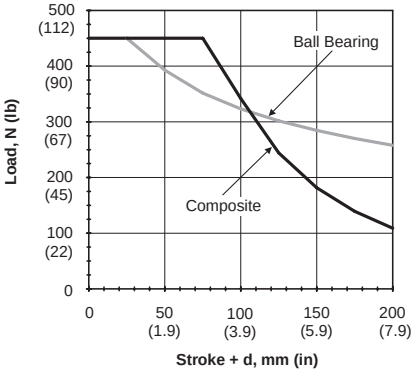

63mm Bore Size

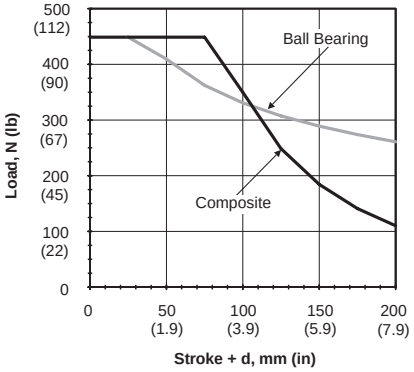

80mm Bore Size

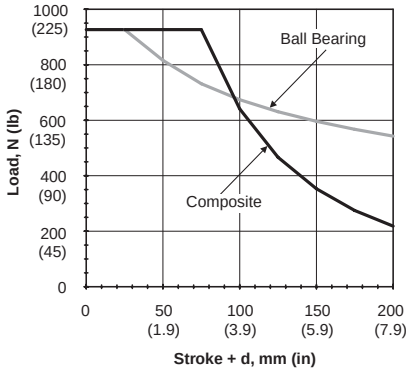

100mm Bore Size

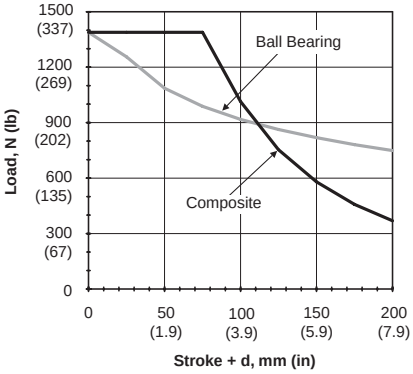

Parker Hannifin Corporation
Pneumatic Division
Wadsworth, Ohio
www.parker.com/pneumatics

800.696.6165 www.comoso.com

A074

Load Stopping Capacity
Standard Unit

P5T Series actuators are ideal for conveyor stopping applications. Units can be mounted horizontally or vertically.

Composite bushings are strongly recommended for this type of application.

EXAMPLE: A P5T-50 unit with a stroke up to 50mm will stop an object moving at 40 cm/second (15.75 in/s) that weighs up to 50 kg (110 lb).

Note: The following graphs are based on 50mm of stroke.

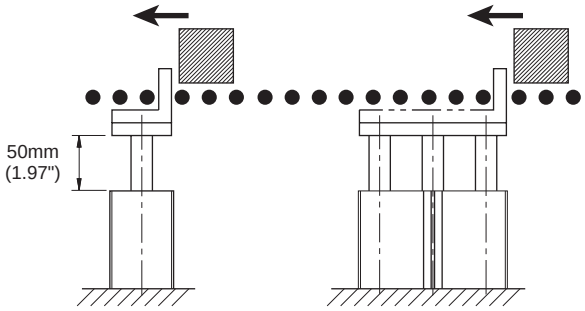

16mm Bore Size

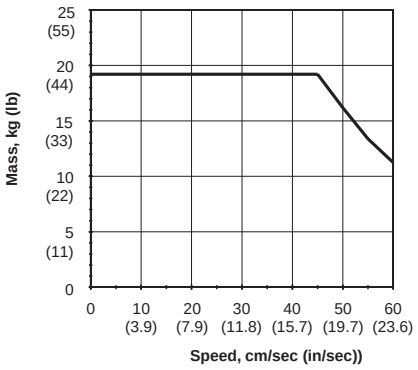

20mm Bore Size

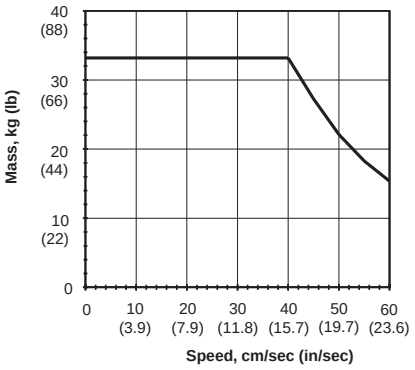

25mm Bore Size

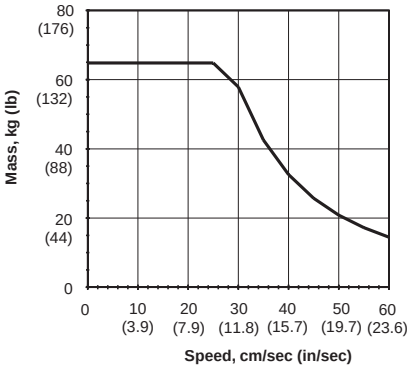

32mm Bore Size

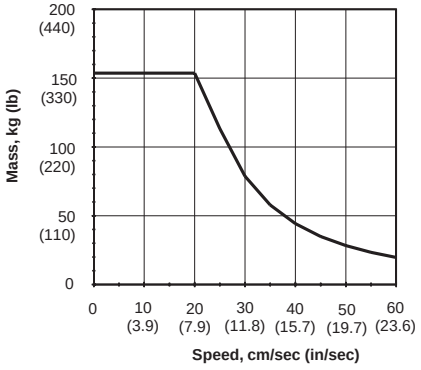

40mm Bore Size

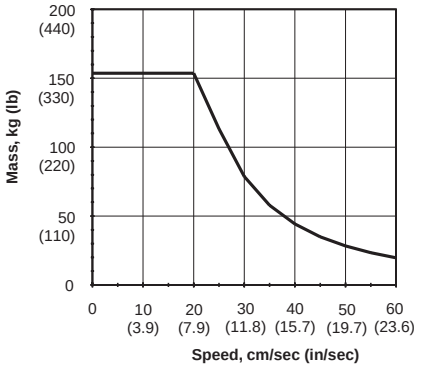

50mm Bore Size

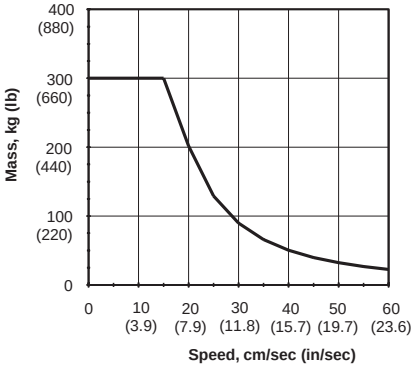

63mm Bore Size

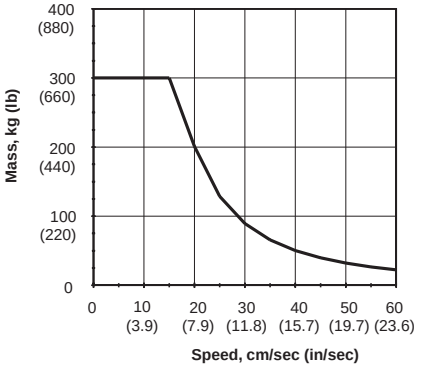

80mm Bore Size

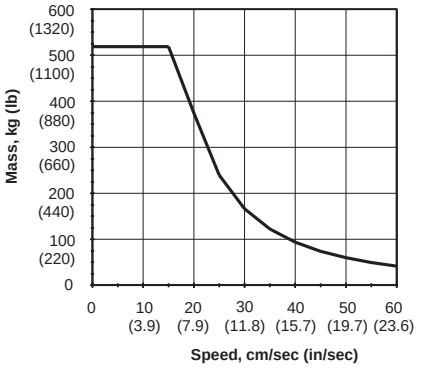

100mm Bore Size

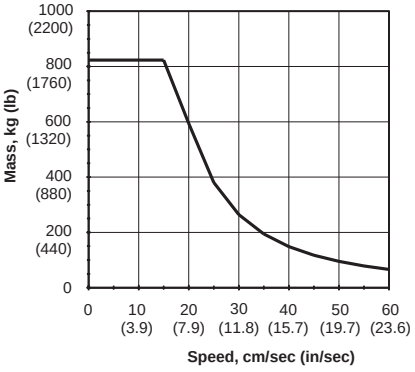

Parker Hannifin Corporation
Pneumatic Division
Wadsworth, Ohio
www.parker.com/pneumatics

800.696.6165 www.comoso.com

A074

Load Stopping Capacity with High Load Bearings and Dual Tool Plate (D, A, B)

P5T Series actuators are ideal for conveyor stopping applications. Units can be mounted horizontally or vertically.

Composite bushings are strongly recommended for this type of application.

EXAMPLE: A P5T-25 unit with a stroke up to 50mm will stop an object moving at 40 cm/second (15.7 in/s) that weighs up to 46 kg (101 lb).

Note: The following graphs are based on 50mm of stroke.

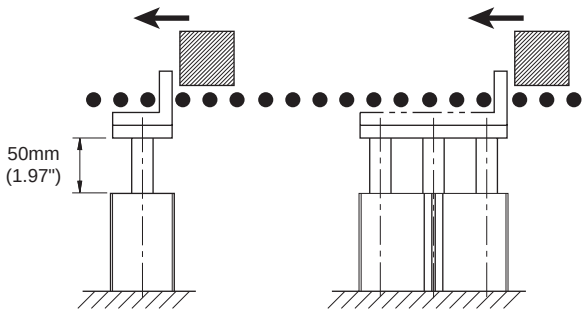

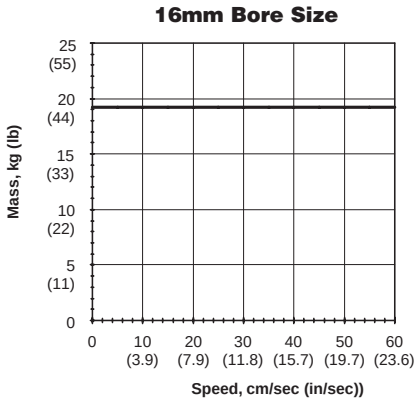

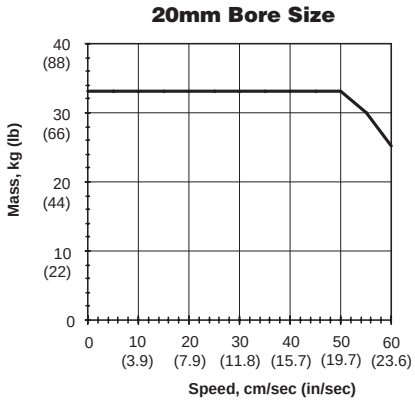

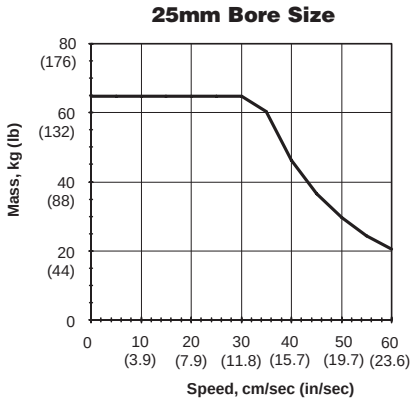

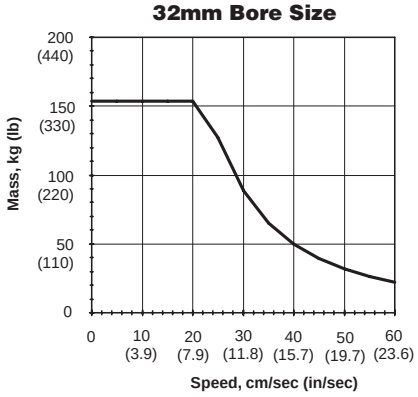

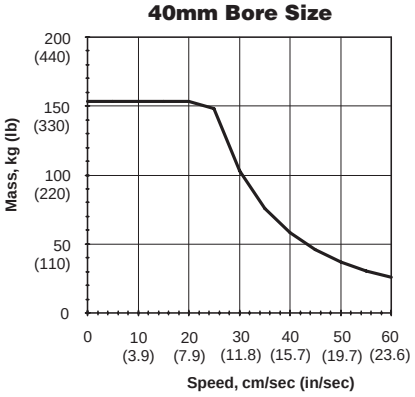

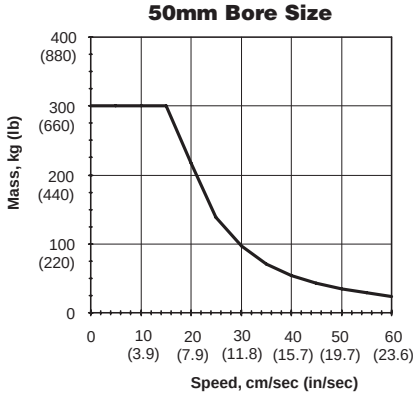

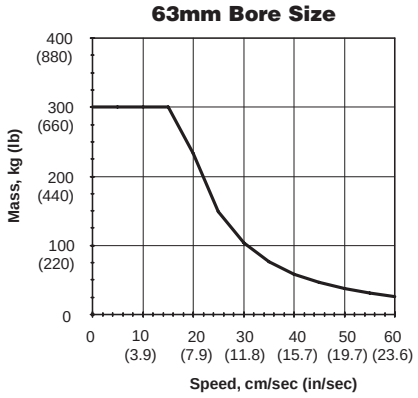

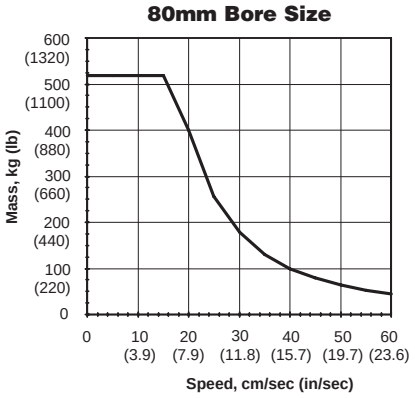

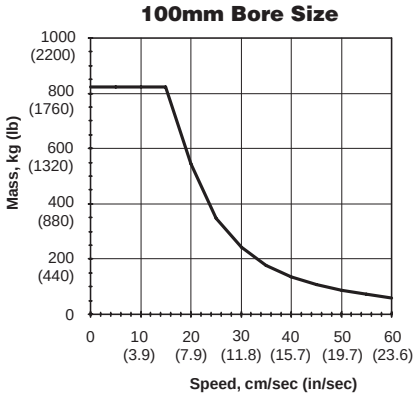

Parker Hannifin Corporation
Pneumatic Division
Wadsworth, Ohio
www.parker.com/pneumatics

800.696.6165 www.comoso.com

A074

Asymmetrical Torque Capacity Standard Unit

Asymmetrical loading occurs when the load is applied to one side of the unit. P5T Series units can resist torsional loads that are asymmetrical.

EXAMPLE: A mechanism exerts an asymmetrical load of 15Nm on a P5T-50 with 50mm “stroke+d”. The P5T-50 with composite bushings will have adequate torsional capacity.

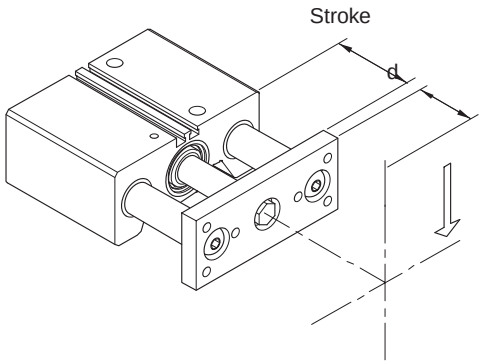

16mm Bore Size

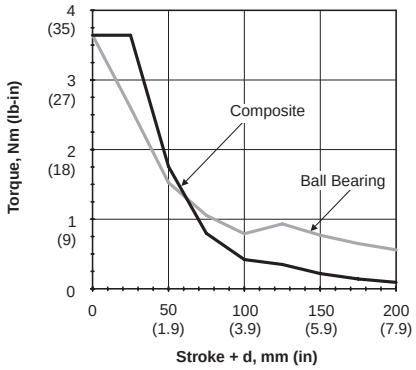

20mm Bore Size

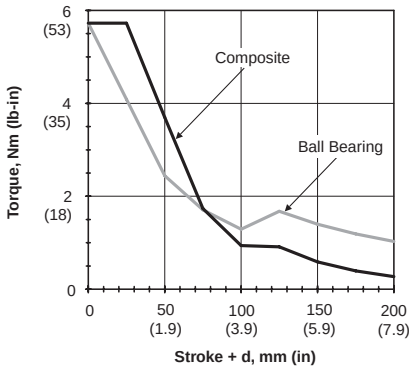

25mm Bore Size

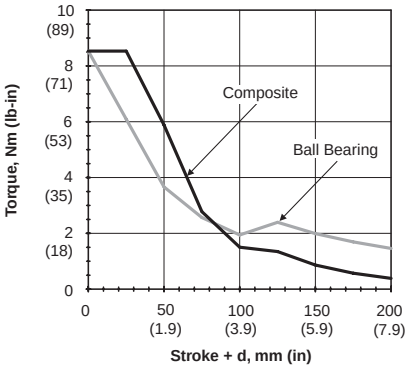

32mm Bore Size

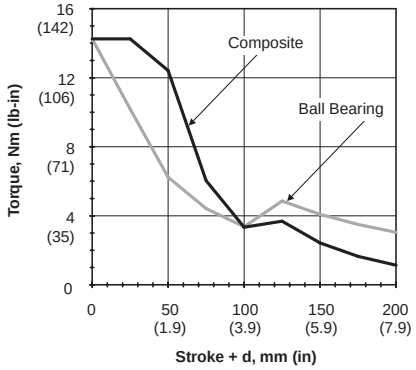

40mm Bore Size

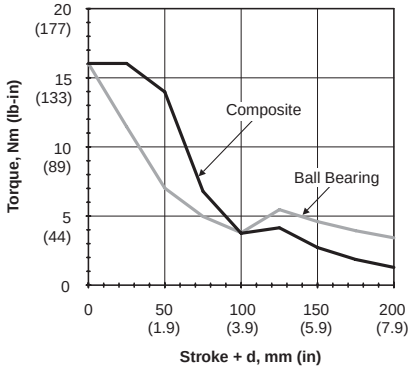

50mm Bore Size

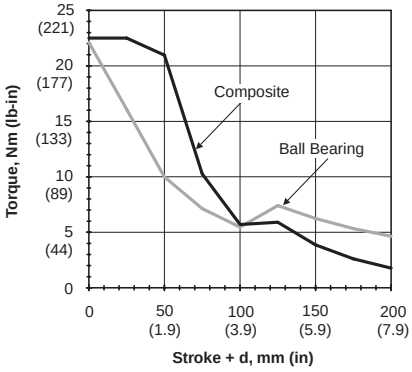

63mm Bore Size

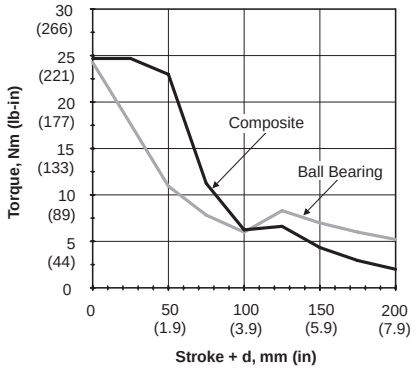

80mm Bore Size

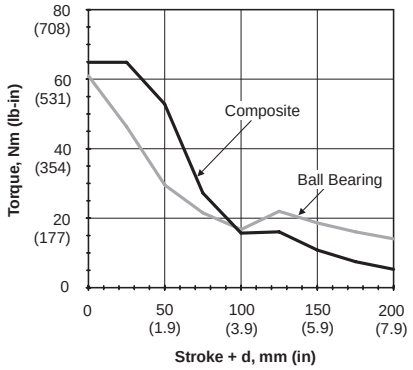

100mm Bore Size

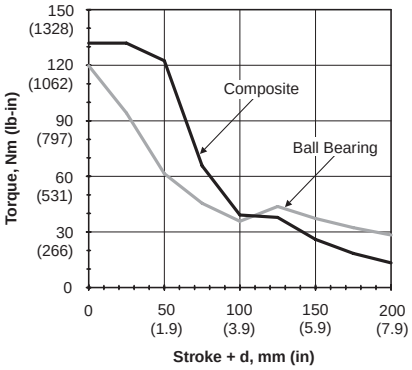

Parker Hannifin Corporation
Pneumatic Division
Wadsworth, Ohio
www.parker.com/pneumatics

800.696.6165 www.comoso.com

A074

Asymmetrical Torque Capacity with High Load Bearings and Dual Tool Plate (D, A, B)

Asymmetrical loading occurs when the load is applied to one side of the unit. P5T Series units can resist torsional loads that are asymmetrical.

EXAMPLE: A mechanism exerts an asymmetrical load of 15Nm on a P5T-50 with 50mm “stroke+d”. The P5T-50 with composite bushings will have adequate torsional capacity.

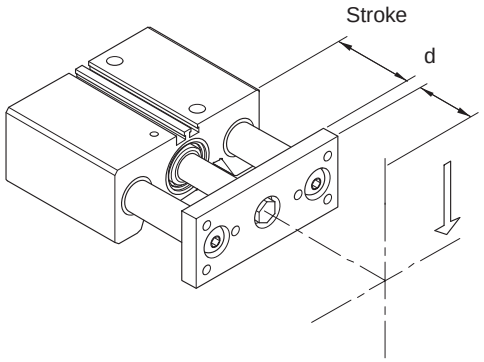

16mm Bore Size

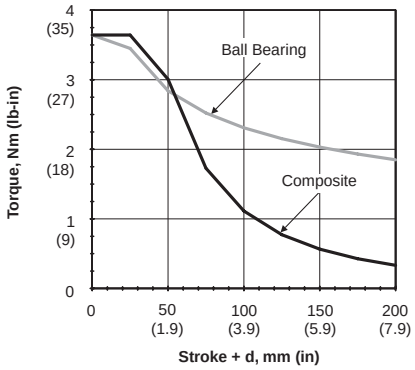

20mm Bore Size

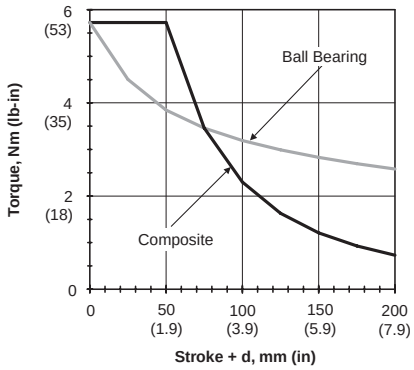

25mm Bore Size

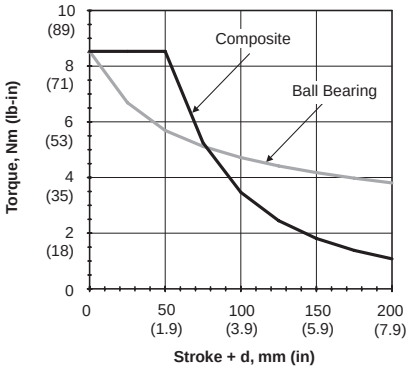

32mm Bore Size

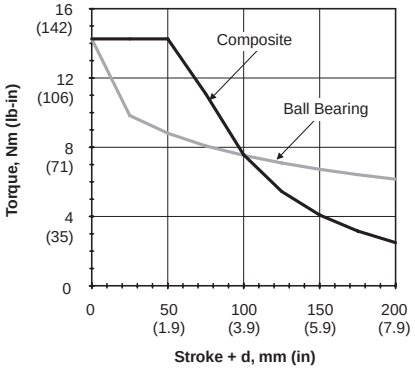

40mm Bore Size

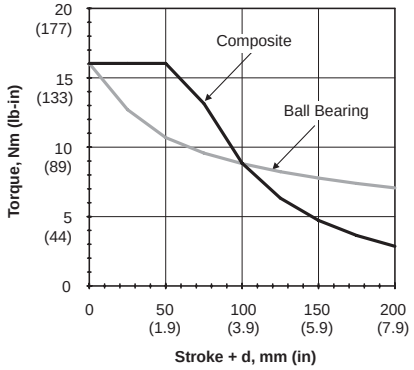

50mm Bore Size

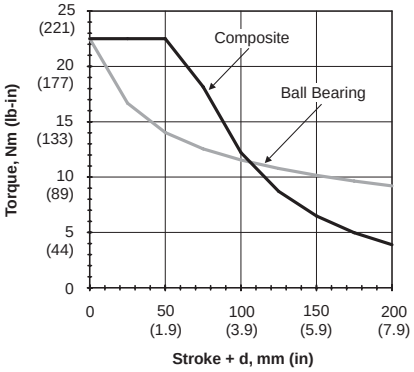

63mm Bore Size

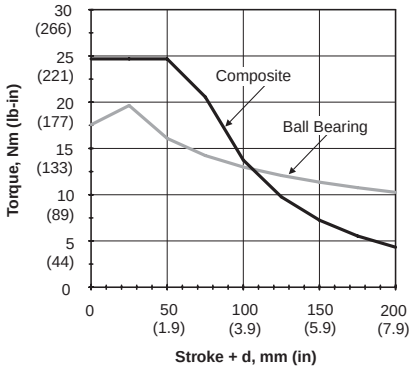

80mm Bore Size

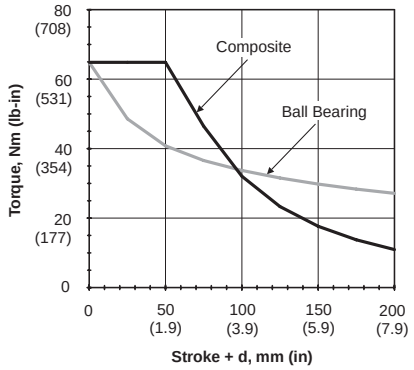

100mm Bore Size

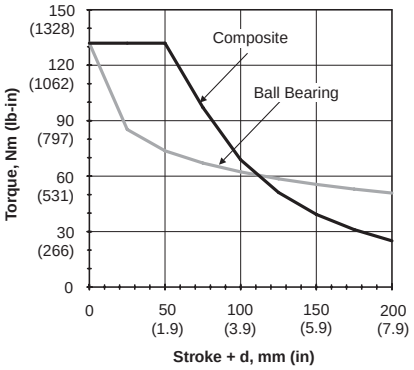

Parker Hannifin Corporation
Pneumatic Division
Wadsworth, Ohio
www.parker.com/pneumatics

800.696.6165 www.comoso.com

A074

Vertical Eccentric Load Capacity Standard Unit

P5T Series units mounted vertically will have the same eccentric load capacity regardless of orientation. The graphs provide maximum load capacity for an eccentric mounted load. The load is assumed to be mounted at the face of the tooling plate.

These load curves illustrate load ratings based on the bearing system of the product. Load rating is a key selection criterion but is not the only one to consider in the selection of a product.

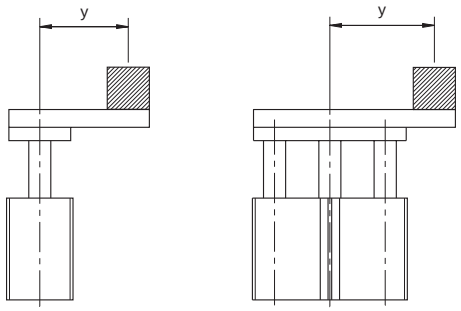

y = eccentricity distance

16mm Bore Size

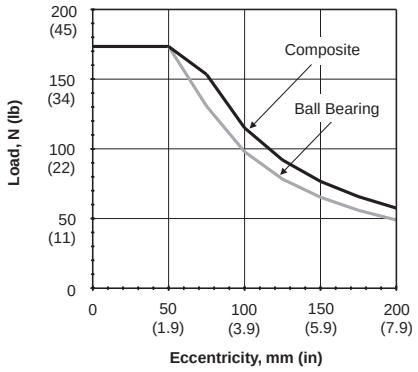

20mm Bore Size

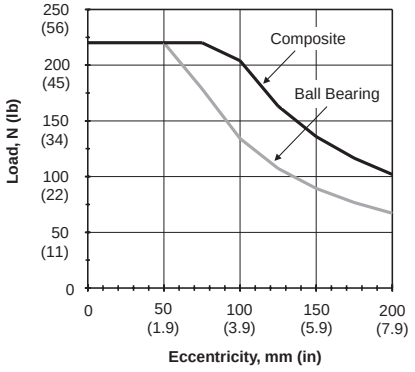

25mm Bore Size

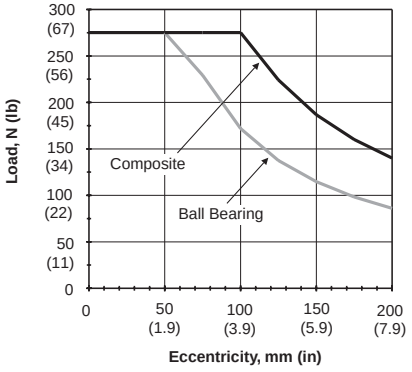

32mm Bore Size

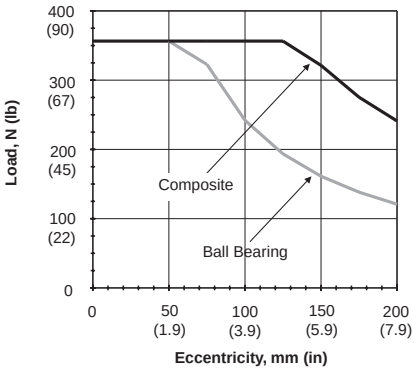

40mm Bore Size

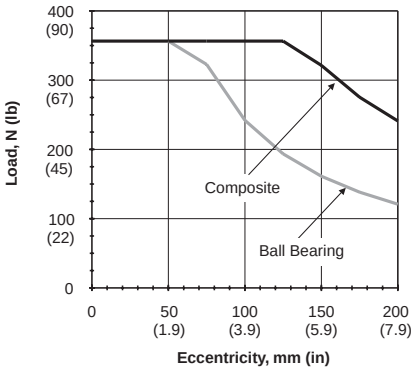

50mm Bore Size

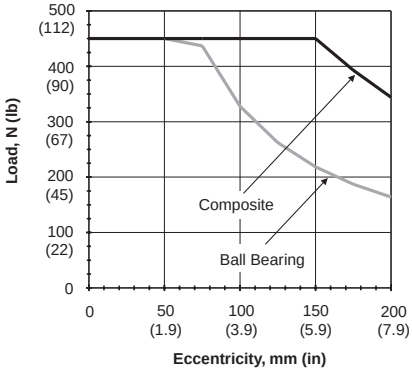

63mm Bore Size

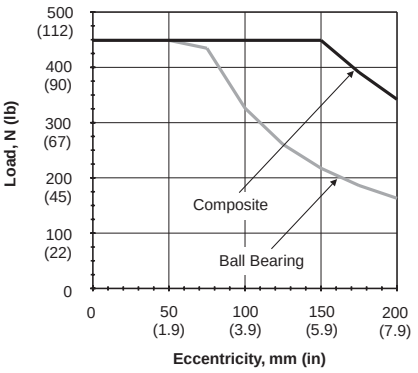

80mm Bore Size

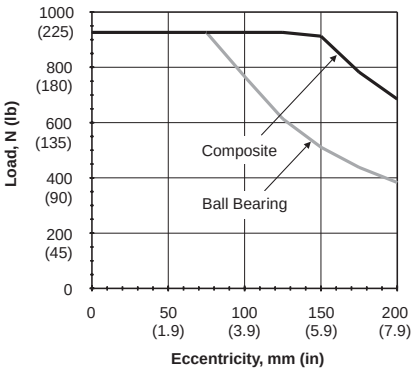

100mm Bore Size

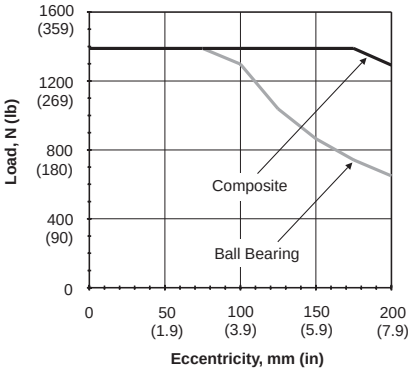

800.696.6165 www.comoso.com

Parker Hannifin Corporation
Pneumatic Division
Wadsworth, Ohio
www.parker.com/pneumatics

A074

Vertical Eccentric Load Capacity with High Load Bearings and Dual Tool Plate (D, A, B)

P5T Series units mounted vertically will have the same eccentric load capacity regardless of orientation. The graphs provide maximum load capacity for an eccentric mounted load. The load is assumed to be mounted at the face of the tooling plate.

These load curves illustrate load ratings based on the bearing system of the product. Load rating is a key selection criterion but is not the only one to consider in the selection of a product.

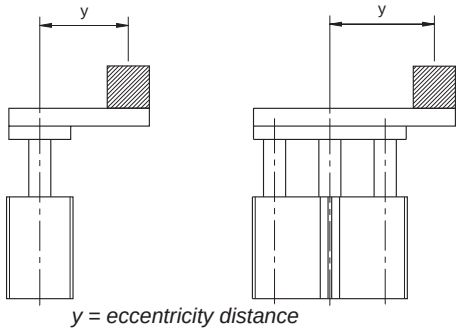

y = eccentricity distance

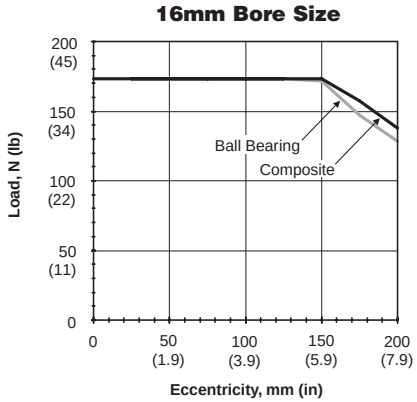

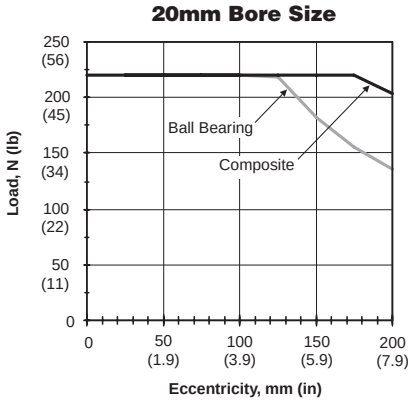

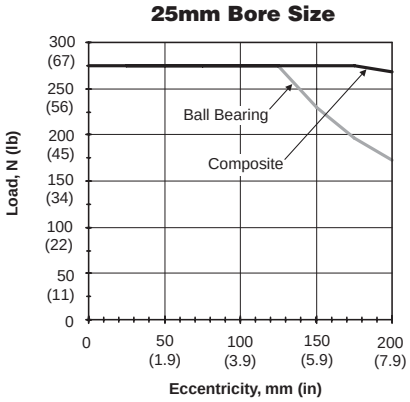

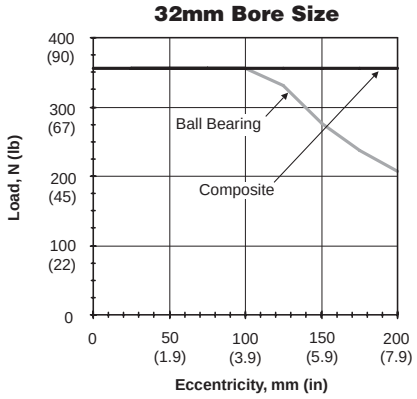

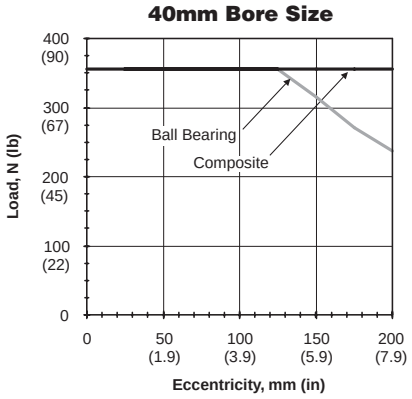

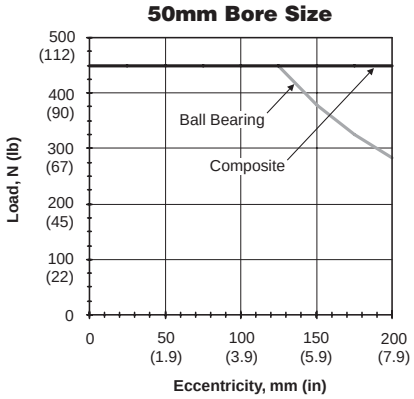

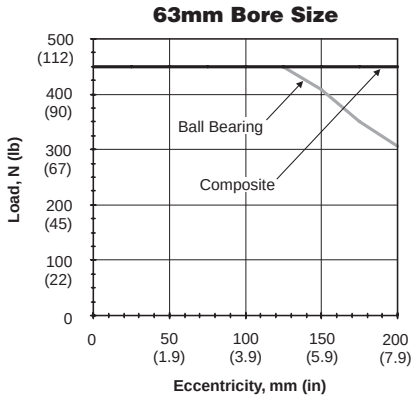

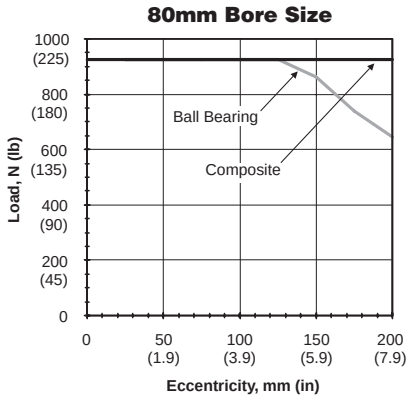

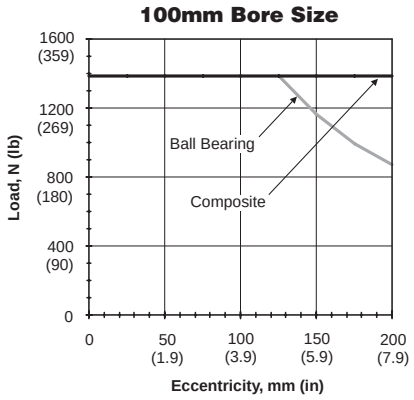

800.696.6165 www.comoso.com

Parker Hannifin Corporation
Pneumatic Division
Wadsworth, Ohio
www.parker.com/pneumatics

A074

Basic Unit

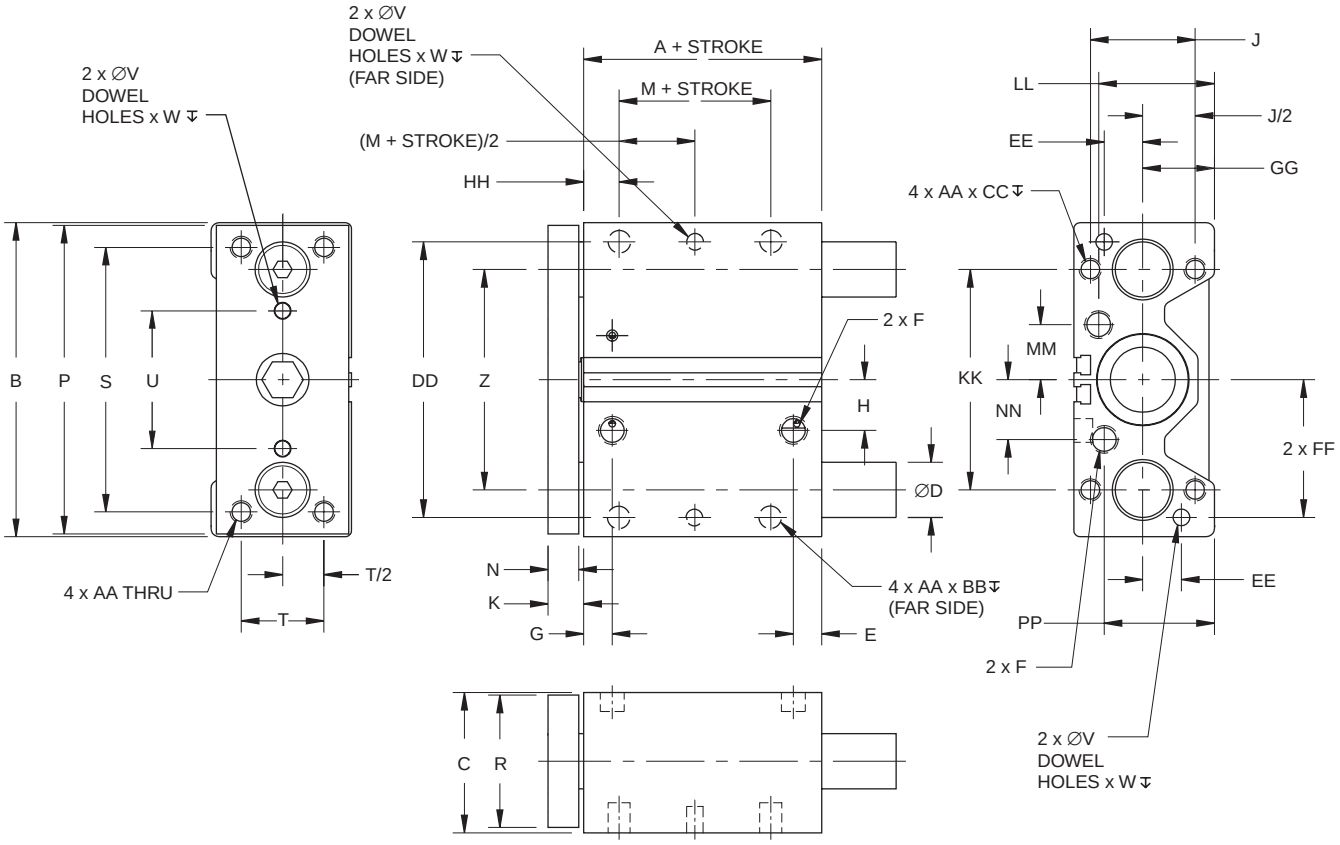

3D CAD FILES
available for download at
parker.com/pneumatics

Note: On 16mm bore size only, one sensor groove is available. When utilizing two sensors on the 16mm bore size with 25mm stroke or less, use right angle short sensors.

F

800.696.6165 www.comoso.com

Parker Hannifin Corporation
Pneumatic Division
Wadsworth, Ohio
www.parker.com/pneumatics

Basic Unit

Model	A**	B	C	D	D2	E**	F	G	H	J	K
16	37.75 (1.49)	64 (2.52)	31 (1.22)	8 (0.315)	10 (0.394)	10.1 (0.40)	M5/10-32	10.1 (0.40)	6.95 (0.27)	22 (0.866)	9.94 (0.39)
20	36 (1.42)	74 (2.91)	36 (1.42)	10 (0.394)	12 (0.472)	19 (0.75)	1/8 NPTF or BSPP	10 (0.39)	15.8 (0.62)	26 (1.024)	9.94 (0.39)
25	38 (1.50)	88 (3.46	42 (1.65)	12 (0.472)	16 (0.630)	21 (0.83)	1/8 NPTF or BSPP	11.4 (0.45)	15.5 (0.61)	32 (1.260)	9.94 (0.39)
32	36 (1.42)	114 (4.49)	51 (2.00)	16 (0.630)	20 (0.787)	10.26 (0.40)	1/8 NPTF or BSPP	10.35 (0.41)	18.42 (0.73)	38 (1.496)	13.1 (0.52)
40	44 (1.73)	124 (4.88)	52 (2.05)	16 (0.630)	20 (0.787)	12.10 (0.48)	1/8 NPTF or BSPP	14.9 (0.59)	22.53 (0.89)	38 (1.496)	13.1 (.052)
50	44.9 (1.77)	140 (5.51)	62 (2.44)	20 (0.787)	25 (0.984)	14.5 (0.57)	1/4 NPTF or BSPP	16.1 (0.63)	27 (1.06)	44 (1.732)	14.7 (0.58)
63	50.05 (1.97)	150 (5.91)	75 (2.95)	20 (0.787)	25 (0.984)	16.4 (0.65)	1/4 NPTF or BSPP	14.5 (0.57)	33 (1.30)	44 (1.732)	14.7 (0.58)
80	60.3 (2.37)	188 (7.40)	95 (3.74)	25 (0.984)	30 (1.181)	17.5 (0.610)	3/8 NPTF or BSPP	19 (0.75)	37 (1.46)	56 (2.205)	18 (0.71)
100**	67.5 (2.60)	224 (8.82)	115 (4.53)	30 (1.181)	35 (1.38)	21.9 (0.862)	3/8 NPTF or BSPP	23 (0.91)	40 (1.57)	62 (2.441)	18 (0.71)

Model	M	N	P	R	S	T	U	V	W	Z	AA	BB
16	7 (0.276)	7.94 (0.31)	62 (2.44)	25.4 (1.00)	52 (2.047)	16 (.630)	20 (0.787)	3 (0.118)	6 (0.236)	42 (1.654)	M5 X 0.8	7.5 (0.30)
20	10 (0.394)	7.94 (0.31)	72 (2.83)	31.8 (1.25)	60 (2.362)	18 (.709)	30 (1.181	4 (0.157)	6 (0.236)	52 (2.047)	M5 X 0.8	7.5 (0.30)
25	10 (0.394)	7.94 (0.31)	86 (3.39)	38 (1.50)	70 (2.756)	26 (1.024)	34 (1.339)	4 (0.157)	6 (0.236)	62 (2.441)	M6 X 1.0	9 (0.35)
32	5 (0.197)	11.1 (0.44)	112 (4.41)	44.5 (1.75)	96 (3.780)	30 (1.181)	50 (1.969)	6 (0.236)	6 (0.236)	80 (3.150)	M8 X 1.25	11 (0.43)
40	10 (0.394)	11.1 (0.44)	122 (4.80)	44.5 (1.75)	106 (4.173)	30 (1.181)	60 (2.362)	6 (0.236)	6 (0.236)	90 (3.543)	M8 X 1.25	11 0.43)
50	10 (0.394)	12.7 (0.50)	138 (5.43)	57.2 (2.25)	120 (4.724)	40 (1.575)	60 (2.362)	8 (0.315)	8 (0.315)	100 (3.937)	M10 X 1.5	12 (0.47)
63	10 (0.394)	12.7 (0.50)	148 (5.83)	69.9 (2.75)	130 (5.118)	50 (1.969)	72 (2.835)	8 (0.315)	8 (0.315)	110 (4.331)	M10 X 1.5	15 (0.59)
80	15 (0.591)	16 (0.63)	185 (7.28)	89 (3.50)	160 (6.299)	60 (2.362)	92 (3.622)	10 (0.394)	10 (0.394)	140 (5.512)	M12 X 1.75	18 (0.71)
100	15 (0.591)	16 (0.63)	221 (8.70)	108 (4.25)	190 (7.480)	80 (3.150)	114 (4.488)	10 (0.394)	10 (0.394)	170 (6.693)	M14 X 2.0	21 (0.83)

Model	CC	DD	EE	FF	GG	HH	KK	LL	MM	NN	PP	Piston Rod
16	10 (0.39)	54 (2.126)	8 (0.315)	27 (1.063)	15 (0.591)	13.06 (0.514)	42 (1.654)	22.5 (0.88)	11.25 (0.44)	9.7 (0.38)	23.0 (0.91)	8 (0.315)
20	10 (0.39)	64 (2.520)	10 (0.394)	32 (1.260)	17 (0.669)	13.06 (0.514)	52 (2.126)	26.0 (1.02)	15.4 (0.61)	15.4 (0.61)	26.0 (1.0)	10 (0.394)
25	12 (0.47)	76 (2.992)	11 (0.433)	38 (1.496)	21 (0.827)	14.06 (0.553)	62 (2.441)	33.4 (1.31)	17 (0.67)	17 (0.67)	33.4 (1.31)	10 (0.394)
32	16 (0.63)	100 (3.937)	14 (0.551)	50 (1.969)	26 (1.024)	12.9 (0.508)	80 (3.150)	42 (1.65)	20 (0.79)	21.7 (0.85)	38 (1.50)	16 (0.630)
40	16 (0.63)	110 (4.33)	14 (0.551)	55 (2.165)	26 (1.024)	13.9 (0.547)	90 (3.543)	41 (1.61)	24 (0.95)	26.4 (1.04)	37.9 (1.49)	16 (0.630)
50	20 (0.79)	124 (4.882)	16 (0.630)	62 (2.441)	30 (1.181)	14.3 (0.563)	100 (3.937)	51 (2.01)	29 (1.14)	33 (1.30)	44 (1.73)	20 (0.787)
63	20 (0.79)	132 (5.197)	18 (0.709)	66 (2.598)	36.5 (1.437)	16.3 (0.642)	110 (4.331)	62 (2.44)	36 (1.42)	37.75 (1.49)	57.75 (2.27)	20 (0.787)
80	24 (0.94)	166 (6.535)	22 (0.866)	83 (3.268)	46.5 (1.831)	21 (0.83)	140 (5.512)	78 (3.07)	45 (1.77)	48 (1.89)	75.5 (2.97)	25 (0.984)
100	28 (1.10)	200 (7.874)	24 (0.945)	100 (3.937)	56.5 (2.224)	25 (0.98)	170 (6.693)	91.5 (3.60)	53 (2.09)	51 (2.01)	95.5 (3.76)	25 (0.984)

D^1 With linear ball bearing D^2 With composite bushing

** For Model 100 with 25mm stroke, A = 100.3 (3.95") and E = 28 (1.10")

All dimensions in mm (inch)

800.696.6165 www.comoso.com

Parker Hannifin Corporation
Pneumatic Division
Wadsworth, Ohio
www.parker.com/pneumatics

Shaft Bearings

Composite bushings are supplied as standard.
Linear ball bearings are optional.

Selection should be based on the following criteria:

Application Requirement	Ball	Composite
Precision	Excellent	Good
Friction	Low	Higher
Friction coefficient	Constant	Variable
Precision over life of bearing	Constant	Variable
Static Load Capacity	Good	Excellent
Dynamic Load Capacity	Good	Good with lower efficiency
Vibration Resistance	Fair	Excellent
Contamination Resistance	Poor	Excellent
Washdown Compatibility	Poor	Excellent

For bearing load capacities, reference the Engineering Data section.

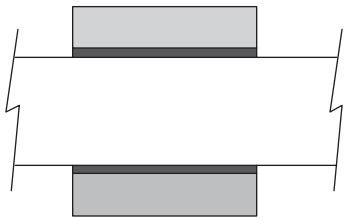

Composite Bushing (J,C)

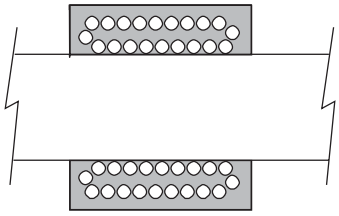

Recirculating Ball Bearing (H)

F

Corrosion Resistant Shafting (C, H)

Chrome-plated case hardened, high carbon alloy steel shafting with composite bearings is utilized for standard slides. This may corrode in some applications. Stainless steel corrosion resistant shafting is available.

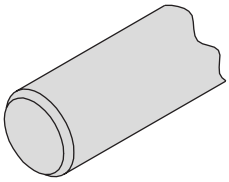

Side Porting (S)

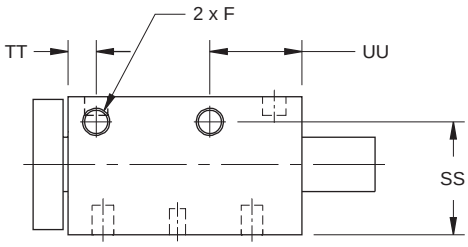

NOTES:

1 Side ports not available on 100mm bore units with 25mm of stroke.

2 Cannot use flow controls with 25mm stroke on any bore size.

Dimensions

Model	SS mm (in)	TT mm (in)	UU mm (in)	F
16	24.1 (.95)	10 (.39)	20 (.79)	10-32 or M5
20	29.00 (1.15)	10 (.39)	20 (.79)	10-32 or M5
25	35.15 (1.38)	11.4 (.45)	24 (.94)	10-32 or M5
32	43.2 (1.70)	10.35 (.41)	34 (1.34)	1/8 NTPF or BSPP
40	43.0 (1.69)	14.9 (.59)	34 (1.34)	1/8 NPTF or BSPP
50	51.25 (2.02)	16.1 (.64)	38 (1.50)	1/4 NTPF or BSPP
63	60.70 (2.39)	15.55 (.61)	41.8 (1.65)	1/4 NPTF or BSPP
80	75.5 (2.97)	19 (.75)	47 (1.85)	3/8 NTPF or BSPP
100	83.7 (3.30)	23 (.91)	53.3 (2.10)	3/8 NPTF or BSPP

Parker Hannifin Corporation
Pneumatic Division
Wadsworth, Ohio
www.parker.com/pneumatics

800.696.6165 www.comoso.com

A074

Flow Controls (B, F, N, P)

Right angle flow control valves allow precise adjustment of cylinder speed by metering exhaust air flow. Prestolok push-in or threaded ports provide 360° orientation capability.

Model	A (in)	B (in)	C (in)	Imperial	
				Prestolok (F)	NPT (N)
16, 20*, 25*	0.87	0.96	0.39	5/32"	10-32
20, 25, 32, 40	1.63	1.38	0.67	5/32"	1/8
50, 63	1.86	1.64	0.91	1/4"	1/4
80, 100	2.15	1.90	1.06	3/8"	3/8

Model	A (mm)	B (mm)	C (mm)	Metric	
				Prestolok (P)	BSPP (B)
16, 20*, 25*	22.0	24.5	10.0	4mm	M5
20, 25, 32, 40	34.5	31.6	14.4	6mm	1/8
50	41.0	34.9	18.4	6mm	1/4
63	41.0	41.3	18.4	10mm	1/4
80	51.0	46.7	21.6	10mm	3/8
100	51.0	46.7	21.6	12mm	3/8

* Side ports only.

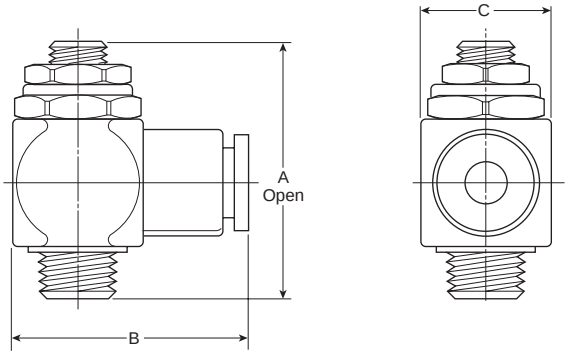

Note: When flow controls are specified with rear ports, a 90° right angle fitting is supplied to provide ample rod clearance in the rear.

Prestolok flow controls are not available on 32-100mm bore sizes with 25mm of stroke.

Fluorocarbon Seals (F)

Standard abrasion resistant nitrile seals should be used for general purpose applications with temperatures of -18 to 74°C (0 to 165°F). Fluorocarbon seals are recommended for high temperature applications up to 121°C (250°F).

Feature	Temperature Range
Bumpers	-18 to 93°C (0 to 200°F)
Magnets	-18 to 74°C (0 to 165°F)
Sensors	-10 to 85°C (14 to 185°F)

800.696.6165 www.comoso.com

Parker Hannifin Corporation
Pneumatic Division
Wadsworth, Ohio
www.parker.com/pneumatics

A074

Standard Length – No Options (N)

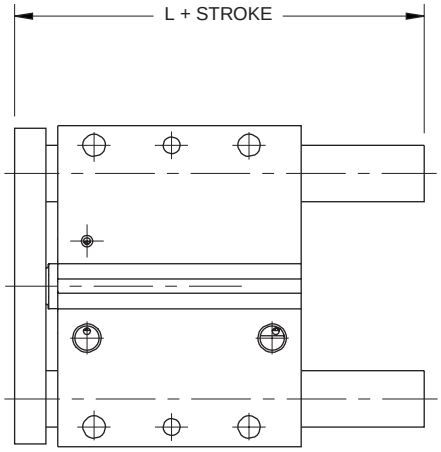

Dimensions

Model	Stroke (mm)	L	
		mm	inch
16	10*, 25, 40, 50, 75	60.2	2.37
	100	75.2	2.96
20	25, 40, 50, 75	66.9	2.63
	100, 125	91.9	3.62
25	25, 50, 75	69.9	2.75
	100, 125, 150	91.9	3.62
32	25, 50, 75, 100	77.9	3.07
	125, 150, 175, 200	116.0	4.57
40	25, 50, 75, 100	77.9	3.07
	125, 150, 175, 200	116.0	4.57
50	25, 50, 75, 100	84.0	3.31
	125, 150, 175, 200	124.1	4.89
63	25, 50, 75, 100	84.0	3.31
	125, 150, 175, 200	124.1	4.89
80	25, 50, 75, 100	101.8	4.00
	125, 150, 175, 200	140.0	5.51
100	25**, 50, 75, 100	120.3	4.74
	125, 150, 175, 200	158.4	6.24

* For Model 16 with 10mm stroke, L = 37.7 mm (1.48").

** For Model 100 with 25mm stroke, L = 122.8mm (4.8").

F

High Load Bearings (B)

The standard bearing configuration locates both sets of bearings at the tooling plate end of the actuator providing a compact actuator package. The high load bearings option (B) locates the bearings at the extreme ends of the housing, increasing the dynamic and static load capacity. The bearing centerlines increase as stroke length increases.

Note: Rear mounting and ports are not available with the high load bearing option.

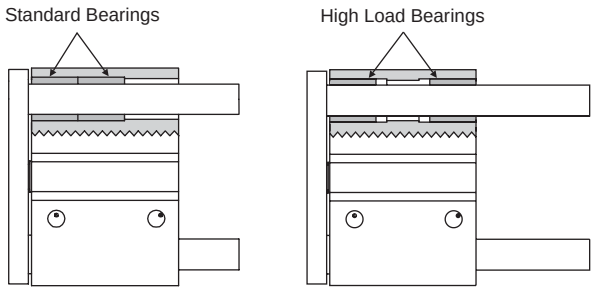

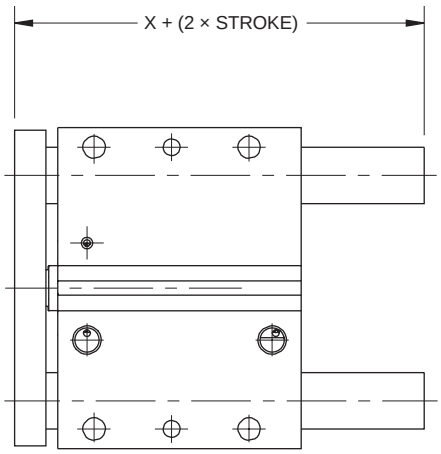

Dimensions

Model	X	
	mm	inch
16	49.7	1.955
20	47.0	1.849
25	49.9	1.963
32	51.1	2.012
40	59.1	2.327
50	61.6	2.425
63	66.8	2.630
80	79.6	3.135
100	86.1	3.391

Parker Hannifin Corporation
Pneumatic Division
Wadsworth, Ohio
www.parker.com/pneumatics

800.696.6165 www.comoso.com

Dual Tool Plate (D)

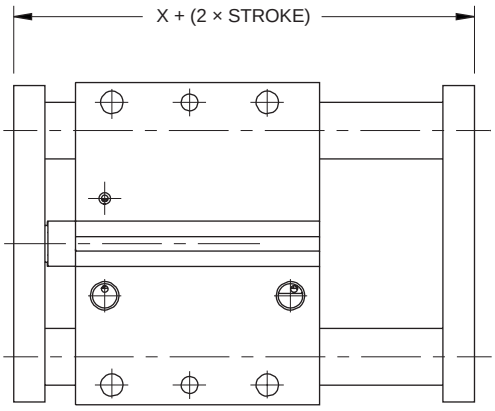

Notes:

1. Load capacities increase on dual tool plate (D & A). For load capacities, use the high load bearing graphs.
2. Rear mounting holes and rear ports are not available with Options D, A, and E.

Bumpers, Stop Collars & Dual Tool Plate (A)

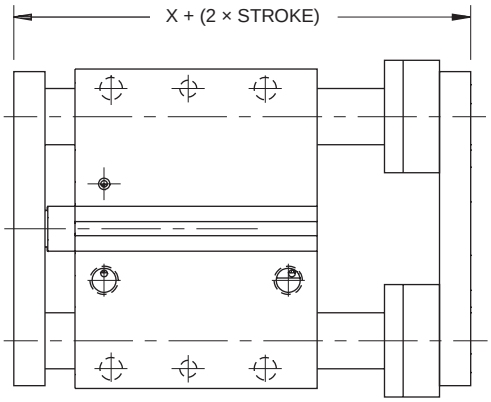

Bumpers & Adjustable Stop Collars, Extend Only (E)

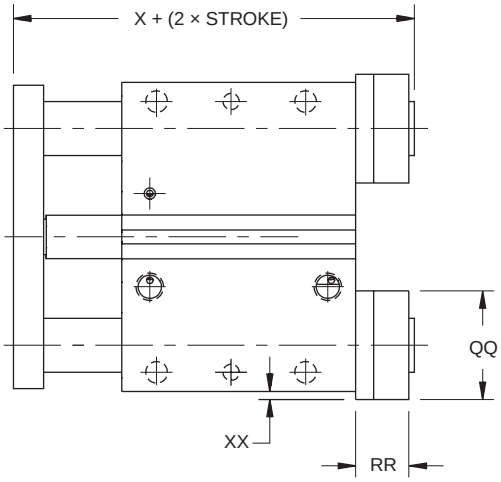

Dimensions

Model	Rod Dia.	X			QQ	RR	XX
		D Option	A Option	E Option			
16	8	57.7 (2.27)	70.7 (2.78)	62.7 (2.47)	18.0 (0.71)	15.7 (0.62)	0
	10	57.7 (2.27)	70.7 (2.78)	62.7 (2.47)	24.0 (0.95)	15.7 (0.62)	1 (0.04)
20	10	54.7 (2.15)	67.9 (2.67)	59.9 (2.36)	24.0 (0.95)	15.7 (0.62)	1 (0.04)
	12	54.7 (2.15)	72.6 (2.86)	64.6 (2.54)	28.0 (1.10)	17.7 (0.70)	3 (0.12)
25	12	58.8 (2.31)	76.5 (3.01)	68.1 (2.68)	28.0 (1.10)	17.7 (0.70)	1 (0.04)
	16	58.8 (2.31)	78.5 (3.09)	70.1 (2.76)	34.0 (1.34)	19.7 (0.78)	4 (0.16)
32	16	62.2 (2.45)	81.9 (3.22)	70.8 (2.79)	34.0 (1.34)	19.7 (0.78)	0
	20	62.2 (2.45)	83.9 (3.30)	72.8 (2.87)	40.0 (1.57)	21.7 (0.85)	3.7 (0.15)
40	16	70.2 (2.76)	89.9 (3.54)	78.8 (3.10)	34.0 (1.34)	19.7 (0.78)	0
	20	70.2 (2.76)	91.9 (3.62)	80.8 (3.18)	41.4 (1.63)	21.7 (0.85)	3.7 (0.15)
50	20	74.3 (2.93)	96.0 (3.78)	83.3 (3.28)	41.4 (1.63)	21.7 (0.85)	0.7 (0.03)
	25	74.3 (2.93)	96.0 (3.78)	83.3 (3.28)	45.0 (1.77)	21.7 (0.85)	5.4 (0.21)
63	20	79.5 (3.13)	101.2 (3.98)	88.5 (3.48)	41.4 (1.63)	21.7 (0.85)	0.7 (0.03)
	25	79.5 (3.13)	101.2 (3.98)	88.5 (3.48)	50.8 (2.00)	21.7 (0.85)	5.4 (0.21)
80	25	96.1 (3.78)	117.8 (4.64)	101.9 (4.01)	50.8 (2.00)	21.7 (0.85)	1.4 (0.06)
	30	96.1 (3.78)	117.8 (4.64)	101.9 (4.01)	54.0 (2.13)	21.7 (0.85)	6.3 (0.25)
100	30	103.3 (4.07)	125.8 (4.95)	109.1 (4.30)	60.5 (2.38)	21.7 (0.85)	3.3 (0.13)
	35	103.3 (4.07)	125.8 (4.95)	109.1 (4.30)	57.0 (2.24)	21.7 (0.85)	5.5 (0.22)

All dimensions in mm (inch)

800.696.6165 www.comoso.com

Parker Hannifin Corporation
Pneumatic Division
Wadsworth, Ohio
www.parker.com/pneumatics

Contaminant & Weld Flash Covers

A contaminant cover protects the guide rods and bearings from particles and fluid that could cause premature failure.

A weld flash cover protects guide rods and bearings from weld spatter.

Cover option can be ordered on models having the bearings both ends option.

Consult factory to order.

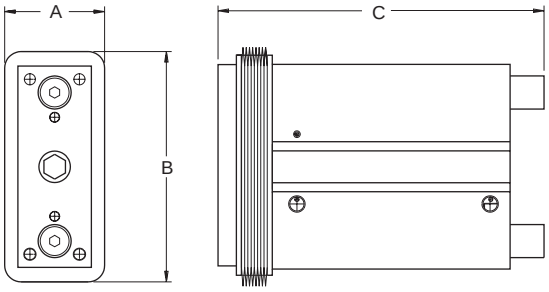

A074

Weld Flash Cover Specifications

Coating Material (exposed side).....PVC (Black)
Base Material ..... Nomex
Coating Material (other side).....PVC (Black)
Material Thickness Range ..... .012" - .016" (.3-.4mm)
Temperature Resistance (Nomex)
Briefly..... 642°F (450°C)
Continuously..... -22° to 572°F (-30° to 300°C)
Temperature Resistance (Coating)
Briefly..... 392°F (200°C)
Continuously..... -22° to 302°F (-30° to 150°C)
Resistant to.....Chemicals, coolants, solvents, oil
Characteristics..... self-extinguishing, abrasion resistant
Material Weight..... 400 grams/square meter

F

Dimensions

MODEL	A	B	10	25	40	50	75	100	125	150	175	200
16	42 (1.65)	86 (3.39)	61.2 (2.41)	100.2 (3.94)	135.2 (5.32)	135.2 (5.32)	160.2 (6.31)	200.2 (7.88)	–	–	–	–
20	45 (1.77)	98 (3.86)	–	106.9 (4.21)	141.9 (5.59)	141.9 (5.59)	166.9 (6.57)	216.9 (8.54)	241.9 (9.52)	–	–	–
25	49 (1.93)	112 (4.41)	–	119.9 (4.72)	–	144.9 (5.70)	169.9 (6.69)	194.9 (7.67)	241.9 (9.52)	266.9 (10.51)	–	–
32	62 (2.44)	142 (5.59)	–	127.9 (5.04)	–	152.9 (6.02)	177.9 (7.00)	202.9 (7.99)	266 (10.47)	291 (11.46)	316 (12.44)	341 (13.43)
40	62 (2.44)	152 (5.98)	–	127.9 (5.04)	–	152.9 (6.02)	177.9 (7.00)	202.9 (7.99)	266 (10.47)	291 (11.46)	316 (12.44)	341 (13.43)
50	66 (2.60)	167 (6.57)	–	134 (5.28)	–	159 (6.26)	184 (7.24)	209 (8.23)	274.1 (10.79)	299.1 (11.78)	324.1 (12.76)	349.1 (13.74)
63	77 (3.03)	187 (7.36)	–	134 (5.28)	–	159 (6.26)	184 (7.24)	209 (8.23)	274.1 (10.79)	299.1 (11.78)	324.1 (12.76)	349.1 (13.74)
80	104 (4.09)	244 (9.61)	–	151.8 (5.98)	–	176.8 (6.96)	201.8 (7.94)	226.8 (8.93)	290 (11.42)	315 (12.40)	340 (13.39)	365 (14.37)
100	109 (4.29)	279 (10.98)	–	170.3 (6.70)	–	195.3 (7.69)	220.3 (8.67)	245.3 (9.66)	308.4 (12.14)	333.4 (13.13)	358.4 (14.11)	383.4 (15.09)

All dimensions in mm (inch)

Parker Hannifin Corporation
Pneumatic Division
Wadsworth, Ohio
www.parker.com/pneumatics

800.696.6165 www.comoso.com

Reed and Solid State Sensors

Sensors are available in both short and standard configurations. Both styles mount in the sensor grooves on the P5T body. The standard sensors mount flush to the body. The short sensor extends out 4.5mm to the cable.
Both styles are available with quick connector or flying leads.

Magnetic piston is standard.

See Electronic Sensors section for part numbers and specifications.

Slide-in Short Sensor

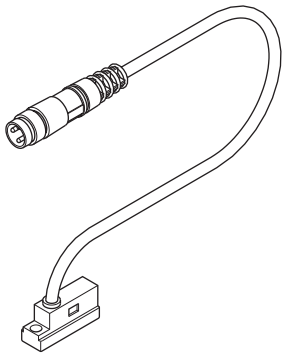

Drop-in Sensor

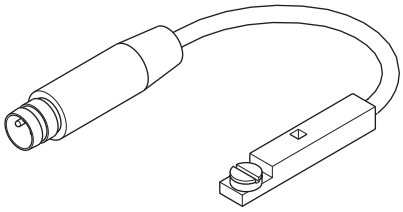

Parker Hannifin Corporation
Pneumatic Division
Wadsworth, Ohio
www.parker.com/pneumatics

800.696.6165 www.comoso.com

Seal Kits

Bore Size	Seal Kit Part Number	
	Nitrile Seals	Fluorocarbon Seals
16	PSK-P5T16	PSK-P5T16-F
20	PSK-P5T20	PSK-P5T20-F
25	PSK-P5T25	PSK-P5T25-F
32	PSK-P5T32	PSK-P5T32-F
40	PSK-P5T40	PSK-P5T40-F
50	PSK-P5T50	PSK-P5T50-F
63	PSK-P5T63	PSK-P5T63-F
80	PSK-P5T80	PSK-P5T80-F
100	PSK-P5T100	PSK-P5T100-F

800.696.6165 www.comoso.com

Parker Hannifin Corporation
Pneumatic Division
Wadsworth, Ohio
www.parker.com/pneumatics