SR/SRM Series
SRD/SRDM Series

Stainless Steel Body Air Cylinders

Contents

Features D4
Ordering Information D5
Mounting Styles D6
Specifications D7
Technical Data D8
Dimensions D9-D35
Air Reservoirs D36
Standard Options D37
Adjustable Cushion Option D38
Accessories D39-D40

Parker Hannifin Corporation
Pneumatic Division
Wadsworth, Ohio
www.parker.com/pneumatics

800.696.6165
www.comoso.com

D

Stainless Steel Piston Rods
Corrosion resistant stainless steel is now the standard piston rod material for all bore sizes up to and including 1.50 inch bore at no additional cost. The only exception to the stainless steel standard is when a hollow rod or non-rotating hexagonal rod option is specified. Stainless steel is also the standard material on block, trunnion and KDX mounts.

Pre-Lubrication
All SR Series cylinders are factory prelubricated for use with or without added lubrication.

Rod Bushings
Oil impregnated bronze, reamed to a close tolerance provides for smooth operation and long life.

Seals
All piston and rod seals are of a lipseal construction. Buna-N is standard on all models. Fluorocarbon seals are available as an option.

Piston Body
Pistons are precision machined aluminum construction. Piston rod connections are threaded and loctited to provide for leakproof and durable service.

Unitized Construction
Precision double-rolled unitized construction provides durable, leak-proof service and long life.

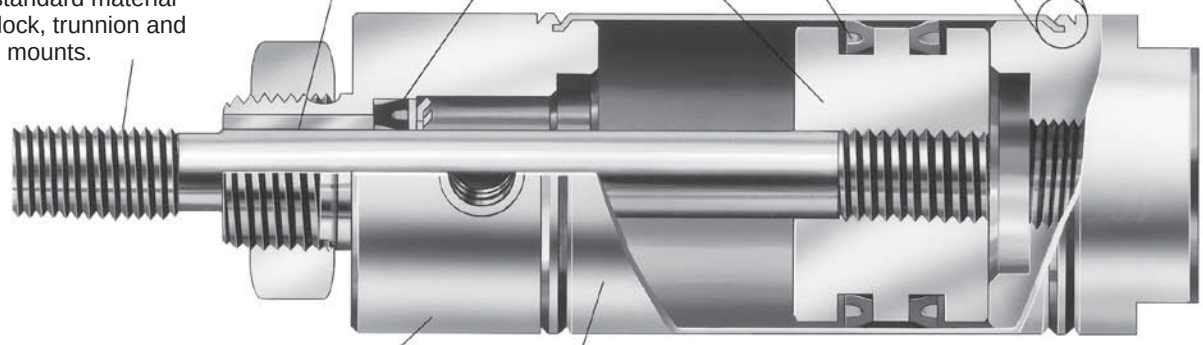

Heads and Caps
Aluminum construction with precision machining provides a smooth break away. The tube-to-head connection is a strong double rolled construction.

Cylinder Tube
Type 304 stainless steel, polished to a micro-inch finish on the I.D. provides low friction and long life.
A matte finish on the O.D. provides smudge resistance.

Twelve Bore Sizes – 5/16" thru 3". SR Series cylinders are designed to be dimensionally interchangeable with other major stainless steel cylinders.

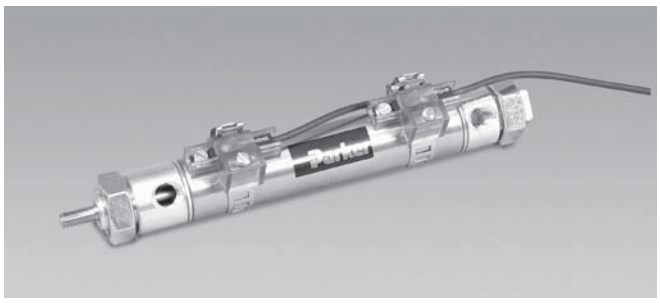

SRM Series

The SRM Series air cylinder can be ordered with reed or solid state sensors that are easily adjustable anywhere on the cylinder body, with no special mounting rail required. NItrile-barium particle composite surrounds the entire piston diameter for non-contact sensing.

Sensors are compatible with Programmable Controllers; an LED indicator is also standard. A shielded cable is standard, and can be extended to 32 feet maximum by the user.

SRD/SRDM Series

SRD/SRDM Series cylinders are designed to withstand a wide range of operating environments to tolerate moisture and many types of lubricants and solvents. The cylinders have a Delrin® (acetal resin) head and cap, an anodized aluminum piston, stainless steel cylinder tube and stainless steel piston rod. Stainless steel accessories are available.

Delrin® is a registered trademark of Dupont. For detailed information regarding the properties of Delrin, contact Dupont.

Parker Hannifin Corporation
Pneumatic Division
Wadsworth, Ohio
www.parker.com/pneumatics

800.696.6165
www.comoso.com

How To Order SR Series Air Cylinders

1.06	C		D	SR	B	V				C	2.00

Bore Size [1]

.31	5/16"
.44	7/16"
.56	9/16"
.75	3/4"
.88	7/8"
1.06	1-1/16"
1.25	1-1/4"
1.50	1-1/2"
1.75	1-3/4"
2.00	2"
2.50	2-1/2"
3.00	3"

Cushion Head [2]

Use "C" only when cushion head is required.

Double Rod

Use "K" only when double rod is required.

Available on DX and DXH mounting only.

Mounting [1]

N, NR, NRP, P, R, RP, D, DP, DXP, DX, DXH, A, RA, AP, AR, BRN, BRR, BFD, BRD, BFN, BFR, TRN, TRR, TFD, TRD, TFN or TFR.

Series

SR	Standard Cylinder
SRM	With Magnetic Piston
SRD	With Delrin Caps
SRDM	With Delrin Caps and Magnetic Piston

Piston

Blank	No Bumpers
B	With Bumpers [3]

Seals

Blank	Standard Seals
V	Fluorocarbon Seals [4]
W	Rod Wiper

Special

Use "S" only if special modifications are required, except piston rod end.

Non-Standard Rod

Specify Y for stainless steel piston rod.

Stainless steel is standard on all bore sizes up to and including 1.50" Bore.

Non-Standard Piston Rod

Use "3" only when special piston rod end is required.

Specify CC, LE and A Dimensions (See below.)

Cushion Cap [2]

Use "C" only when cushion cap is required.

Stroke

Specify in inches.

1 Bore sizes and mounting styles are limited by series. See table on next page for availability.
2 Cushions not available on SRD/SRDM series.
3 Bumpers may increase cylinder length. See page D37 for adders.
4 Fluorocarbon seals not available on SRM or SRDM series.

Non-Standard Rods

For non-standard rod dimensions, or undersized rod end threads, put a "3" in model number and describe the rod using the letters shown in the drawing. Specify CC, LE and A dimensions.

Full Diameter Rod End Threads

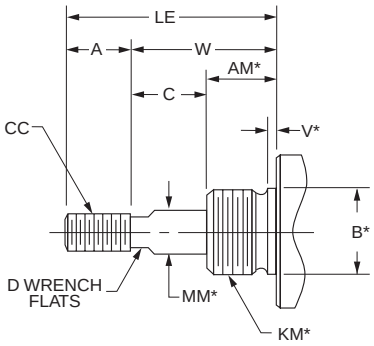

Undersized Rod End Threads

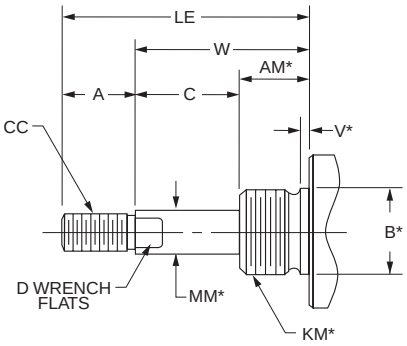

*Requires an S designation in model number.

800.696.6165
www.comoso.com

Parker Hannifin Corporation
Pneumatic Division
Wadsworth, Ohio
www.parker.com/pneumatics

D

Available Mounting Styles

Mount Style	Description	Bore Size (Reference Notes 1 & 2 for availability)												Max. Stroke (in.)	Page
		5/16" (1,2)	7/16" (1,2)	9/16"	3/4"	7/8" (1,2)	1-1/16"	1-1/4" (2)	1-1/2"	1-3/4" (2)	2"	2-1/2" (2)	3" (1,2)		
N (2)	Nose mount, spring return	●	●	●	●	●	●	●	●	●	▲	—	—	6" (3)	D7
NR (2)	Nose mount, spring return, hex rod (non-rotating)	—	●	●	●	●	●	●	●	●	—	—	—	6"	D8
NRP (2)	Pivot and nose mount, spring return, hex rod (non-rotating)	—	●	●	●	●	●	●	●	●	—	—	—	6"	D9
P (2)	Pivot mount, spring return	●	●	●	●	●	●	●	●	●	▲	—	—	6"	D10
R (2)	Nose mount, spring extended	●	●	●	●	●	●	●	●	●	▲	—	—	6"	D11
RP (2)	Pivot and nose mount, spring extend	●	●	●	●	●	●	●	●	—	▲	—	—	6"	D12
D	Nose mount, double acting	●	●	●	●	●	●	●	●	●	●	●	●	12"	D13
DP (2)	Pivot and nose mount, double acting, pivot pin	—	●	—	●	—	●	—	●	—	—	—	—	12"	D14
DXP	Pivot and nose mount, double acting, no pivot pin	●	●	●	●	●	●	●	●	●	●	●	●	See Note 4	D15
DX	Threaded both ends, double acting	—	See DXP	See DXP	See DXP	See DXP	See DXP	See DXP	●	—	See DXP	—	—	32"	D16
KDX	Threaded both ends, double acting, double rod	—	●	●	●	●	●	●	●	●	●	●	●	See Note 5	D17
KDXH (2)	Threaded both ends, double rod, hollow rod	—	—	—	—	—	●	●	●	●	●	—	—	12"	D18
A (1,2)	Nose mount, spring return, head adjustable stroke	—	—	—	●	—	●	—	●	—	—	—	—	6"	D19
RA (1,2)	Nose mount, spring extend, cap adjustable stroke	—	—	—	●	—	●	—	●	—	—	—	—	6"	D20
AP (1,2)	Pivot mount, spring return, head adjustable stroke	—	—	—	●	—	●	—	●	—	—	—	—	6"	D21
AR (1,2)	Air reservoirs	—	—	—	●	—	●	—	●	—	●	—	—	12"	D34
BRN (2)	Rear block mount, single acting,	—	●	—	●	—	●	—	●	—	—	—	—	6"	D22
BRR (2)	Rear block mount, single acting, spring return	—	—	—	●	—	●	—	●	—	—	—	—	6"	D23
BFD (2)	Front block mount, double acting	●	●	—	●	—	●	—	●	—	—	—	—	12"	D24
BRD (2)	Rear block mount, double acting	—	●	—	●	—	●	—	●	—	—	—	—	12"	D25
BFN (2)	Front block mount, single acting spring return	—	●	—	●	—	●	—	●	—	—	—	—	6"	D26
BFR (2)	Front block mount, single acting spring extend	—	—	—	●	—	●	—	●	—	—	—	—	6"	D27
TRN (2)	Rear trunnion mount, single acting, spring return	—	●	—	●	—	●	—	●	—	—	—	—	6"	D28
TRR (2)	Rear trunnion mount, single acting spring extend	—	—	—	●	—	●	—	●	—	—	—	—	6"	D29
TFD (2)	Front trunnion mount, double acting	—	●	—	●	—	●	—	●	—	—	—	—	12"	D30
TRD (2)	Rear trunnion mount, double acting	—	●	—	●	—	●	—	●	—	—	—	—	12"	D31
TFN (2)	Front trunnion mount, single acting spring return	—	●	—	●	—	●	—	●	—	—	—	—	6"	D32
TFR (2)	Front trunnion mount, single acting spring extend	—	—	—	●	—	●	—	●	—	—	—	—	6"	D33

▲ Recommended maximum stroke is 4" in models N, P, R & RP.
1 Not available on SRM (magnetic piston) cylinders.
2 Not available on SRD/DM (Delrin caps) cylinders.
3 Recommended maximum stroke is 4" for 5/16" bore models.
4 Max stroke 12" for bore sizes under 3/4"; 32" for bore sizes 3/4" and up.
5 Max stroke 6" for bore sizes under 3/4"; 12" for bore sizes 3/4" and up.

Parker Hannifin Corporation
Pneumatic Division
Wadsworth, Ohio
www.parker.com/pneumatics

800.696.6165 www.comoso.com

Standard Specifications

- 304 stainless steel cylinder body.
- Aluminum heads and caps.
- Stainless steel piston rods are standard up to 1.50" bore.
- Nominal pressure rating 250 psi for SR and SRM
  100 psi for SRD/SRDM
- Standard temperature -10°F to +165°F for SR
  +14°F to +140°F for SRM
  +32°F to +160°F for SRD/SRDM

In line with our policy of continuing product improvement, the specifications in this catalog are subject to change without notice.

- Twelve bore sizes — 5/16" through 3" (see table for SRM and SRD/DM exclusions).
- 28 standard mounting styles (not all available on SRM and SRD/SRDM – see table on previous page).
- Single and double acting
- Bumpers
- Adjustable cushions
- Rod wipers

For additional mounting styles please consult factory.

For detailed information regarding the properties of Delrin® contact Dupont.

Port Locations

Mounting Style	Standard Head Port Location	Standard Cap Port Location	Standard Vent Location
AR	Face	Face	None
BFR	2	None	2
BFN	None	Face	2
BRD	2	2	None
BFD	2	Face	None
BRR	2	None	2
BRN	None	2	2
TFR	1	None	1
TFN	None	Face	1
TRD	1	1	None
TFD	1	Face	None
TRR	1	None	1
TRN	None	1	1
AP	None	2	2
RA	2	None	2
A	None	Face	2
KDXH	2	2	None
KDX	2	2	None
DX	2	2	None
DXP	2	2	None
DP	2	2	None
D	2	Face	None
RP	2	None	2
R	2	None	2
P	None	2	2
NRP	None	2	2
NR	None	Face	2
N	None	Face	2

End View of Mountings for Port Location

Mounting Styles N, NR, D, R, AR

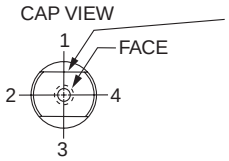

Standard location for cushion adjustment needle when cushions are specified on D mounts.

Mounting Styles P, RP, DXP, NRP, DP, AP

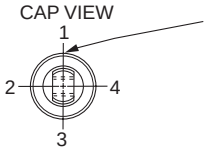

Standard location for cushion adjustment needle when cushions are specified on DXP mounts.

Mounting Style A

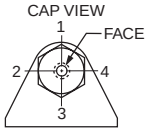

Mounting Style RA

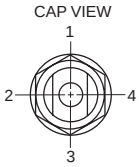

Mounting Styles BFD, BFN, BFR

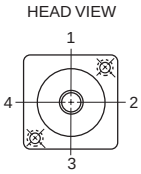

Mounting Styles BRN, BRR, BRD

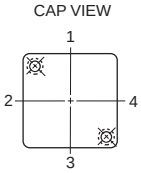

Mounting Styles KDXH, KDX

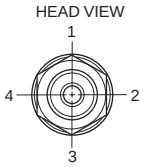

Mounting Style DX

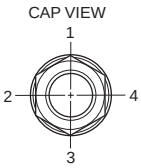

Mounting Styles TFD, TFN, TFR

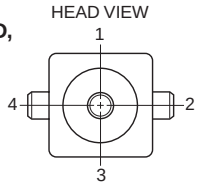

Mounting Styles TRN, TRR, TRD

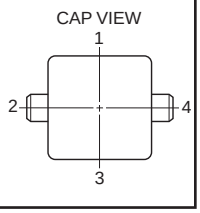

Cylinders will have ports at these locations unless otherwise specified.

Parker Hannifin Corporation
Pneumatic Division
Wadsworth, Ohio
www.parker.com/pneumatics

800.696.6165
www.comoso.com

Port Size — Rod Diameter — Spring Force Data

Bore Size	Port Size	Rod Diameter (or Hex)	Force Factor		Spring Return (lbs)		Spring Extend (lbs)	
			Push	Pull	Normal	Extended	Normal	Extended
.31 (5/16")	#10-32	1/8"	0.08	0.06	0.5	1	0.5	1
.44 (7/16")	#10-32	3/16"	0.15	0.12	1	2	1	2
.56 (9/16")	#10-32	3/16"	0.25	0.22	2	4	2	4
.75 (3/4")	1/8 NPTF	1/4"	0.44	0.39	3	6	3	6
.88 (7/8")	1/8 NPTF	1/4"	0.60	0.55	3	6	3	6
1.06 (1-1/16")	1/8 NPTF	5/16"*	0.89	0.81	3†	6†	7.5	15
1.25 (1-1/4")	1/8 NPTF	7/16"	1.23	1.08	7.5	15	7.5	15
1.50 (1-1/2")	1/8 NPTF	7/16"	1.77	1.62	6†	12†	9	18
1.75 (1-3/4")	1/4 NPTF	1/2"	2.40	2.21	11	24	11	24
2.00 (2")	1/4 NPTF	5/8"	3.14	2.84	15	30	15	30
2.50 (2-1/2")	1/4 NPTF	5/8"	4.91	4.60	N/A	N/A	N/A	N/A
3.00 (3")	3/8 NPTF	3/4"	7.07	6.63	N/A	N/A	N/A	N/A

* Non-rotating version uses 3/8" hex.
† Block mount and trunnion mount spring return lbs. equals spring extend lbs.

D

Springs — shot peened music wire for high cycle life. Spring spacers are provided for every one inch of stroke (1/2" for 5/16" and 7/16" bores) to insure uniform spring rate and prevent spring failure.

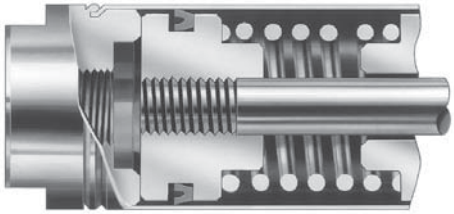

Option Availability

Option	Bumpers	Fluorocarbon Seals	Rod Wipers	Cushions	Delrin® End Caps
Bumpers	—	◆	◆	X	◆
Fluorocarbon Seals	—	—	X	S	◆
Rod Wiper	—	—	—	◆	◆
Cushions	—	—	—	—	X

◆ = Available Options
S = Available as Special
X = Not Available

Delrin® is a registered trademark of Dupont.

800.696.6165
www.comoso.com
Parker Hannifin Corporation
Pneumatic Division
Wadsworth, Ohio
www.parker.com/pneumatics

Mounting Style N
Nose Mount, Spring Return

Drawings are representative of cylinders. Certain bore sizes may not look exactly as shown.

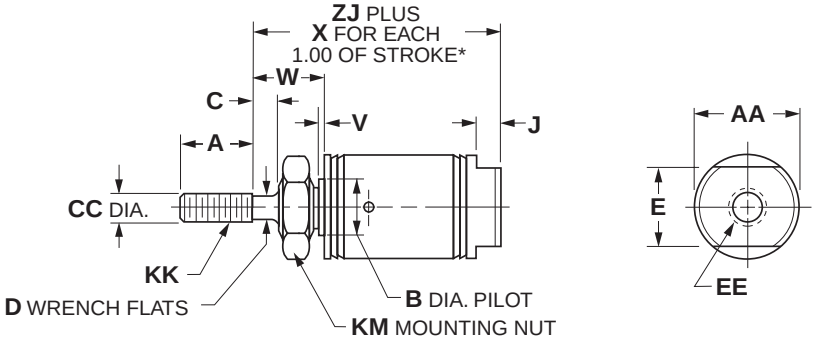

Bore	SR	SRM	Std. Strokes (in)	Max Stroke (in)	SS Rod Std
5/16"	●		1/2, 1, 1-1/2, 2, 2-1/2, 3, 4	4	✓
7/16"	●		1/2, 1, 1-1/2, 2, 2-1/2, 3, 4	6	✓
9/16"	●	●	1/2, 1, 1-1/2, 2, 3, 4	6	✓
3/4"	●	●	1/2, 1, 1-1/2, 2, 3, 4	6	✓
7/8"	●		1/2, 1, 1-1/2, 2, 3, 4	6	✓
1-1/16"	●	●	1/2, 1, 1-1/2, 2, 3, 4	6	✓
1-1/4"	●	●	1/2, 1, 2, 3, 4	6	✓
1-1/2"	●	●	1/2, 1, 2, 3, 4	6	✓
1-3/4"	●	●	1/2, 1, 1-1/2, 2, 2-1/2, 3, 4	6	
2"	●	●	–	4	

Bore	A	AA	B	C	CC	D	E	EE	J	KK	KM	V	W	X	ZJ	
															SR	SRM
5/16"	0.38	0.36	–	–	0.125	–	0.36	#10-32	–	#5-40 UNC	1/4-28	0	0.25	0.75**	1.12	–
7/16"	0.50	0.50	0.374	–	0.188	–	0.38	#10-32	0.19	#10-32 UNF	3/8-24	0.05	0.31	0.94**	1.31	–
9/16"	0.50	0.62	0.437	–	0.188	–	0.50	#10-32	0.19	#10-32 UNF	7/16-20	0.06	0.38	1.62	1.53	1.76
3/4"	0.50	0.81	0.499	–	0.250	–	0.62	1/8 NPTF	0.19	1/4-28 UNF	1/2-20	0.09	0.44	1.69	1.50	1.75
7/8"	0.50	0.93	0.624	–	0.250	–	0.62	1/8 NPTF	0.19	1/4-28 UNF	5/8-18	0.09	0.50	1.56	1.84	–
1-1/16"	0.50	1.12	0.624	0.12	0.312	0.25	0.88	1/8 NPTF	0.19	5/16-24 UNF	5/8-18	0.09	0.62	1.56	2.06	2.31
1-1/4"	0.75	1.34	0.749	0.25	0.437	0.38	0.88	1/8 NPTF	0.25	7/16-20 UNF	3/4-16	0.09	0.88	1.81	2.66	2.78
1-1/2"	0.75	1.56	0.749	0.25	0.437	0.38	0.88	1/8 NPTF	0.25	7/16-20 UNF	3/4-16	0.09	0.88	1.69	2.44	2.69
1-3/4"	0.88	1.84	1.031	0.38	0.500	7/16	1.25	1/4 NPTF	0.25	1/2-20 UNF	1-14	0.09	0.75	2.0	2.97	3.09
2"	0.88	2.08	1.374	0.38	0.625	0.50	1.25	1/4 NPTF	0.31	1/2-20 UNF	1-1/4-12	0.12	1.19	–	▲	▲

▲ 5.66" for 1" stroke; 7.66" for 2" stroke; 8.91" for 3" stroke; 11.84" for 4" stroke.

* To determine lengths for half inch stroke increments, determine length for next highest whole number stroke and subtract a half inch.

** For each 0.50" of stroke

800.696.6165
www.comoso.com

Parker Hannifin Corporation
Pneumatic Division
Wadsworth, Ohio
www.parker.com/pneumatics

D

Mounting Style NR
Nose Mount, Spring Return, Hex Rod

Drawings are representative of cylinders. Certain bore sizes may not look exactly as shown.

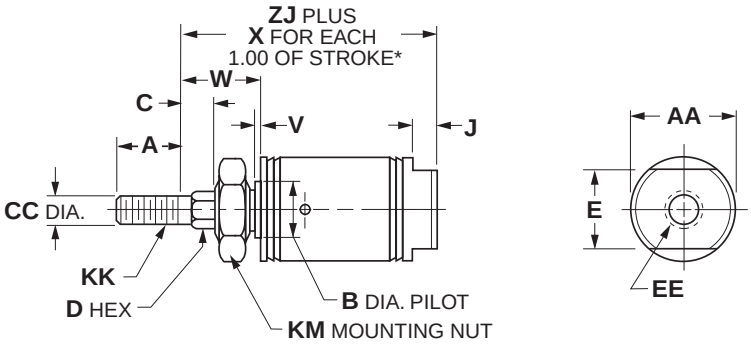

Bore	SR	SRM	Std. Stroke (in)	Max Stroke (in)	SS Rod Std
7/16"	●		1/2, 1, 1-1/2, 2, 3, 4	6	✓
9/16"	●	●	1/2, 1, 1-1/2, 2, 3, 4	6	✓
3/4"	●	●	1/2, 1, 1-1/2, 2, 3, 4	6	✓
7/8"	●		1/2, 1, 1-1/2, 2, 3, 4	6	✓
1-1/16"	●	●	1/2, 1, 1-1/2, 2, 3, 4	6	✓
1-1/4"	●	●	1, 2, 3, 4	6	✓
1-1/2"	●	●	1/2, 1, 2, 3, 4	6	✓
1-3/4"	●	●	1/2, 1, 1-1/2, 2, 2-1/2, 3, 4	6	

Bore	A	AA	B	C	CC	D	E	EE	J	KK	KM	V	W	X	ZJ	
															SR	SRM
7/16"	0.50	–	0.374	0.25	0.188	3/16	–	#10-32	0.19	#10-32 UNF	3/8-24	0.05	0.56	0.94	1.56	–
9/16"	0.50	–	0.437	0.25	0.188	3/16	–	#10-32	0.19	#10-32 UNF	7/16-20	0.06	0.62	1.62	1.78	2.03
3/4"	0.50	–	0.499	0.25	0.250	1/4	–	1/8 NPTF	0.19	1/4-28 UNF	1/2-20	0.09	0.69	1.69	1.75	2.00
7/8"	0.50	–	0.624	0.25	0.250	1/4	–	1/8 NPTF	0.19	1/4-28 UNF	5/8-18	0.09	0.75	1.56	2.09	–
1-1/16"	0.50	1.12	0.624	0.25	0.312	3/8	0.88	1/8 NPTF	0.19	5/16-24 UNF	5/8-18	0.09	0.75	1.56	2.19	2.44
1-1/4"	0.88	1.34	0.749	0.25	0.437	7/16	0.88	1/8 NPTF	0.25	7/16-20 UNF	3/4-16	0.09	0.88	1.81	2.66	2.78
1-1/2"	0.88	1.56	0.749	0.38	0.437	7/16	0.88	1/8 NPTF	0.25	7/16-20 UNF	3/4-16	0.09	1.00	1.69	2.56	2.81
1-3/4"	0.88	1.84	1.031	0.38	0.500	1/2	1.25	1/4 NPTF	0.25	1/2-20 UNF	1-14	0.09	1.12	2.0	3.03	3.15

* To determine lengths for half inch stroke increments, determine length for next highest whole number stroke and subtract one half inch.

800.696.6165 www.comoso.com

Parker Hannifin Corporation
Pneumatic Division
Wadsworth, Ohio
www.parker.com/pneumatics

Mounting Style NRP
Pivot & Nose Mount, Spring Return, Hex Rod

Drawings are representative of cylinders. Certain bore sizes may not look exactly as shown.

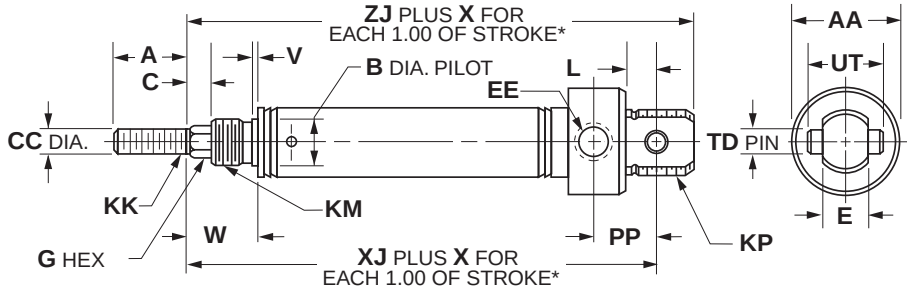

Bore Sizes
7/16" *
3/4"

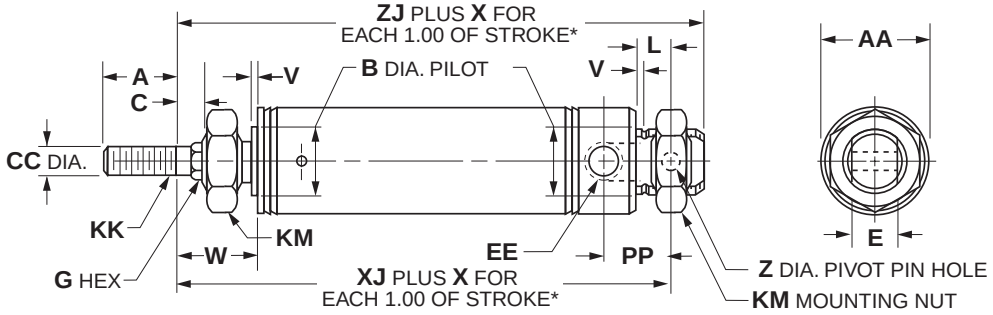

Bore Sizes
9/16" *
7/8" *
11/16" *
11/4"
11/2" *
13/4"

*No Mounting Nuts

Bore	SR	SRM	Std. Stroke (in)	Max Stroke (in)	SS Rod Std	A	AA	B	C	CC	E	EE
7/16"	●		1/2, 1, 1-1/2, 2, 3, 4	6	✓	0.50	0.74	0.374	0.25	0.188	0.31	#10-32
9/16"	●	●	1/2, 1, 1-1/2, 2, 3, 4	6	✓	0.50	0.62	0.437	0.25	0.188	0.31	#10-32
3/4"	●	●	1, 2, 3, 4	6	✓	0.50	0.86	0.499	0.25	0.250	0.38	1/8 NPTF
7/8"	●		1, 2, 3, 4	6	✓	0.50	0.93	0.624	0.25	0.250	0.38	1/8 NPTF
1-1/16"	●	●	1, 2, 3, 4	6	✓	0.50	1.12	0.624	0.25	0.312	0.38	1/8 NPTF
1-1/4"	●	●	1, 2, 3, 4	6	✓	0.88	1.34	0.749	0.25	0.437	0.50	1/8 NPTF
1-1/2"	●	●	1, 2, 3, 4	6	✓	0.88	1.56	0.749	0.38	0.437	0.62	1/8 NPTF
1-3/4"	●	●	1/2, 1, 1-1/2, 2, 2-1/2, 3, 4	6		0.88	1.84	1.031	0.38	0.500	0.62	1/4 NPTF

Bore	G HEX	KK	KM	KP	L	PP	TD	UT	V	W	X	XJ		Z	ZJ	
												SR	SRM		SR	SRM
7/16"	3/16	#10-32 UNF	3/8-24	7/16-20 UNF	0.25	0.44	0.156	0.50	0.05	0.56	0.94	2.00	–	–	2.25	–
9/16"	3/16	#10-32 UNF	7/16-20	7/16-20 UNF	0.25	0.38	–	–	0.06	0.62	1.62	2.06	2.31	0.157	2.25	2.50
3/4"	1/4	1/4-28 UNF	1/2-20	5/8-18 UNF	0.34	0.62	0.250	0.75	0.09	0.69	1.69	2.53	2.78	–	2.81	3.06
7/8"	1/4	1/4-28 UNF	5/8-18	5/8-18 UNF	0.34	0.62	0.250	0.75	0.09	0.75	1.56	2.72	–	–	3.00	–
1-1/16"	3/8	5/16-24 UNF	5/8-18	5/8-18 UNF	0.34	0.62	0.250	0.75	0.09	0.75	1.56	2.78	3.03	–	3.06	3.31
1-1/4"	7/16	7/16-20 UNF	3/4-16	–	0.41	0.78	0.251	–	0.09	0.88	1.81	3.38	3.50	0.251	3.78	3.91
1-1/2"	7/16	7/16-20 UNF	3/4-16	–	0.50	0.81	0.375	1.00	0.09	1.00	1.69	3.25	3.50	–	3.62	3.87
1-3/4"	1/2	1/2-20 UNF	1-14	–	0.50	1.12	0.376	0.62	0.09	1.12	2.0	4.09	4.21	0.376	4.59	4.71

* To determine lengths for half inch stroke increments, determine length for next highest whole number stroke and subtract one half inch.

Parker Hannifin Corporation
Pneumatic Division
Wadsworth, Ohio
www.parker.com/pneumatics

800.696.6165 www.comoso.com

Mounting Style P
Pivot Mount, Spring Return

Drawings are representative of cylinders. Certain bore sizes may not look exactly as shown.

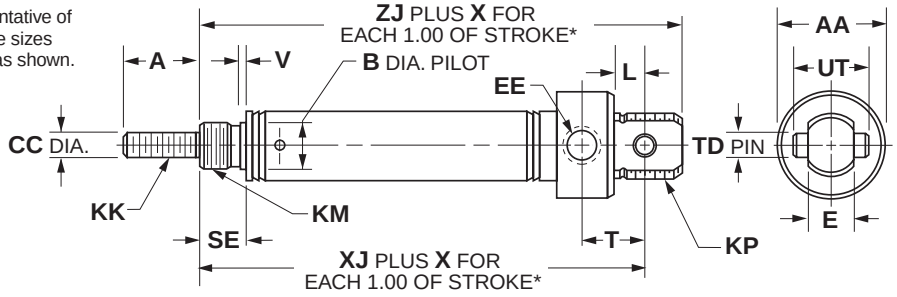

Bore Sizes
5/16"*
7/16"
3/4"

*With Mounting Nuts

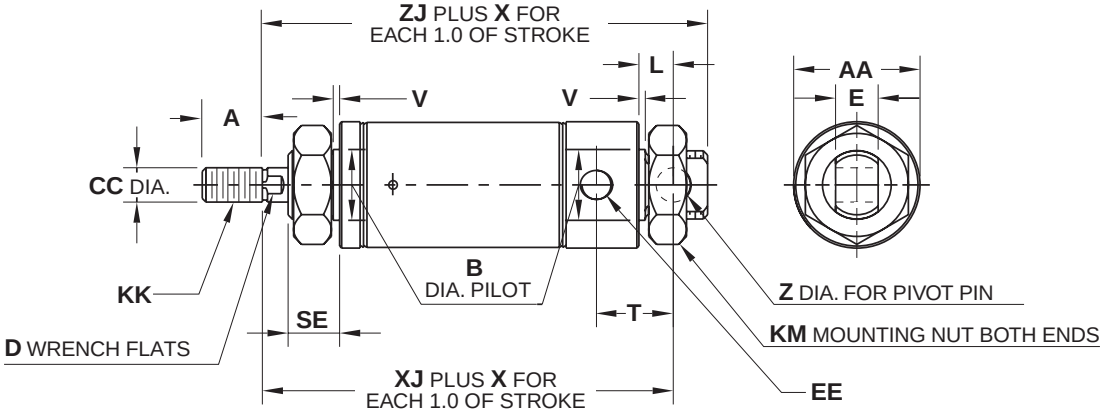

Bore Sizes
9/16"*
7/8"*
1-1/16"*
1-1/4"
1-1/2"*
1-3/4"
2" *

*No Mounting Nuts

Bore	SR	SRM	Std. Stroke (in)	Max Stroke (in)	SS Rod Std	A	AA	B	CC	D	E	EE
5/16"	●		1/2, 1, 1-1/2, 2, 3, 4	4	✓	0.38	0.39	–	0.125	–	0.25	#10-32
7/16"	●		1/2, 1, 1-1/2, 2, 3, 4	6	✓	0.50	0.74	0.374	0.188	–	0.31	#10-32
9/16"	●	●	1/2, 1, 1-1/2, 2, 3, 4	6	✓	0.50	0.62	0.437	0.188	–	0.31	#10-32
3/4"	●	●	1/2, 1, 1-1/2, 2, 3, 4	6	✓	0.50	0.86	0.499	0.250	–	0.38	1/8 NPTF
7/8"	●		1/2, 1, 1-1/2, 2, 3, 4	6	✓	0.50	0.93	0.624	0.250	–	0.38	1/8 NPTF
1-1/16"	●	●	1/2, 1, 1-1/2, 2, 3, 4	6	✓	0.50	1.12	0.624	0.312	0.25	0.38	1/8 NPTF
1-1/4"	●	●	1, 2, 3, 4	6	✓	0.75	1.34	0.749	0.437	0.38	0.50	1/8 NPTF
1-1/2"	●	●	1, 2, 3, 4	6	✓	0.75	1.56	0.749	0.437	0.38	0.62	1/8 NPTF
1-3/4"	●	●	1/2, 1, 1-1/2, 2, 2-1/2, 3, 4	6		0.88	1.84	1.031	0.500	7/16	0.62	1/4 NPTF
2"	●	●	–	4		0.88	2.08	1.374	0.625	0.50	0.75	1/4 NPTF

Bore	KK	KM	KP	L	SE	T	TD	UT	V	X	XJ		Z	ZJ	
											SR	SRM		SR	SRM
5/16"	#5-40 UNC	3/8-24	–	0.34	0.25	0.34	–	–	–	0.75	1.52	–	0.125	1.68	–
7/16"	#10-32 UNF	3/8-24	7/16-20 UNF	0.25	0.31	0.44	0.156	0.50	0.05	0.94	1.75	–	–	2.00	–
9/16"	#10-32 UNF	7/16-20	7/16-20 UNF	0.25	0.38	0.38	–	–	0.06	1.62	1.81	2.06	0.157	2.00	2.25
3/4"	1/4-28 UNF	1/2-20	5/8-18 UNF	0.34	0.44	0.62	0.250	0.75	0.09	1.69	2.28	2.53	–	2.56	2.81
7/8"	1/4-28 UNF	5/8-18	5/8-18 UNF	0.34	0.50	0.62	0.250	0.75	0.09	1.56	2.47	–	–	2.75	–
1-1/16"	5/16-24 UNF	5/8-18	5/8-18 UNF	0.34	0.50	0.62	0.250	0.75	0.09	1.56	2.66	2.91	–	2.94	3.19
1-1/4"	7/16-20 UNF	3/4-16	–	0.41	0.63	0.78	–	–	0.09	1.81	3.38	3.91	0.251	3.78	3.50
1-1/2"	7/16-20 UNF	3/4-16	–	0.50	0.63	0.81	0.375	1.00	0.09	1.81	3.12	3.37	–	3.50	3.75
1-3/4"	1/2-20 UNF	1-14	–	0.50	0.75	1.12	–	–	0.09	2.0	4.03	4.15	0.376	4.53	4.65
2"	1/2-20 UNF	1-1/4-12	–	0.56	0.81	1.03	–	–	0.12	–	■	✷	–	▲	◆

■ 6.34" for 1" stroke, 8.34" for 2" stroke, 9.59" for 3" stroke, 12.53" for 4" stroke*

▲ 6.78" for 1" stroke, 8.78" for 2" stroke, 10.03" for 3" stroke, 12.97" for 4" stroke*

* To determine lengths for half inch stroke increments, determine length for next highest whole number stroke and subtract a half inch.

Parker Hannifin Corporation
Pneumatic Division
Wadsworth, Ohio
www.parker.com/pneumatics

800.696.6165 www.comoso.com

Mounting Style R
Nose Mount, Spring Extended

Drawings are representative of cylinders. Certain bore sizes may not look exactly as shown.

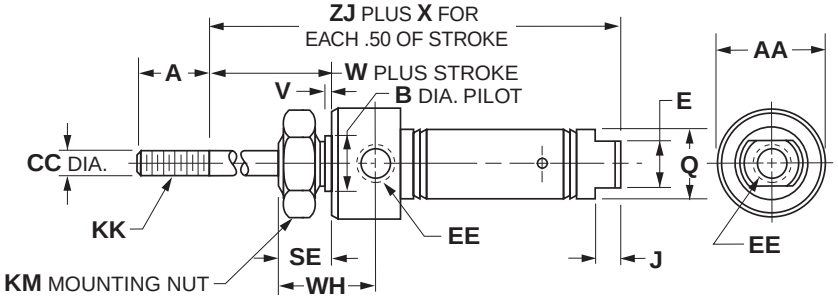

Bore Sizes
5/16"
7/16"
3/4"

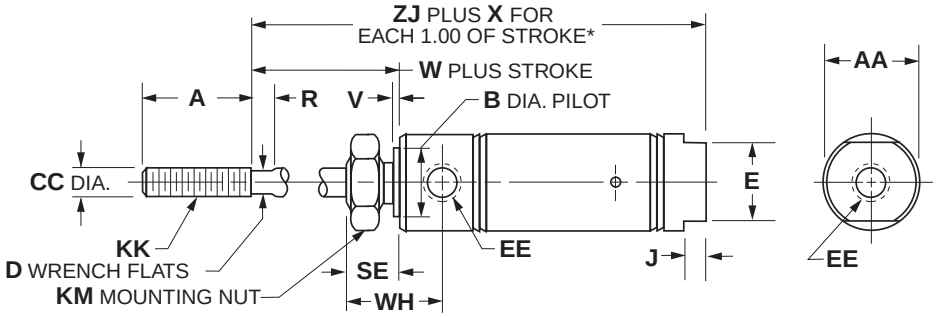

Bore Sizes
9/16"
7/8"
1-1/16"
1-1/4"
1-1/2"
1-3/4"
2" *

*No Mounting Nut

Bore	SR	SRM	Std. Stroke (in)	Max Stroke (in)	SS Rod Std	A	AA	B	CC	D	E
5/16"	●		1/2, 1, 1-1/2, 2, 2-1/2, 3	4	✓	0.38	0.50 SQ.	–	0.125	–	–
7/16"	●		1/2, 1, 1-1/2, 2, 3	6	✓	0.50	0.74	0.437	0.188	–	0.38
9/16"	●	●	1/2, 1, 1-1/2, 2, 3	6	✓	0.50	0.62	0.437	0.188	–	0.50
3/4"	●	●	1/2, 1, 2, 3, 4	6	✓	0.50	0.86	0.624	0.250	–	–
7/8"	●		1/2, 1, 2, 3, 4	6	✓	0.50	0.93	0.624	0.250	–	–
1-1/16"	●	●	1/2, 1, 1-1/2, 2, 3, 4	6	✓	0.50	1.12	0.624	0.312	0.25	–
1-1/4"	●	●	1, 2, 3, 4	6	✓	0.75	1.34	0.749	0.437	0.38	–
1-1/2"	●	●	1, 2, 3, 4	6	✓	1.25	1.56	0.749	0.437	0.38	0.88
1-3/4"	●	●	1/2, 1, 1-1/2, 2, 2-1/2, 3, 4	6		0.88	1.84	1.031	0.500	7/16	–
2"	●	●	–	4		0.88	2.08	1.374	0.625	0.50	–

Bore	EE	J	KK	KM	Q	R	SE	V	W	WH	X	ZJ	
												SR	SM
5/16"	#10-32	–	#5-40 UNC	3/8-24	0.36	–	0.31	–	0.31	0.47	1.25	1.49	–
7/16"	#10-32	0.19	#10-32 UNF	7/16-20	0.50	–	0.38	0.05	0.38	0.72	1.44	1.94	–
9/16"	#10-32	0.19	#10-32 UNF	7/16-20	0.62	–	0.38	0.05	0.38	0.78	2.62	2.00	2.25
3/4"	1/8 NPTF	–	1/4-28 UNF	5/8-18	0.81	–	0.50	0.09	0.50	0.97	2.69**	2.31	2.56
7/8"	1/8 NPTF	–	1/4-28 UNF	5/8-18	–	–	0.50	0.09	0.50	0.97	2.56	2.31	–
1-1/16"	1/8 NPTF	–	5/16-24 UNF	5/8-18	–	0.12	0.50	0.09	0.62	1.06	2.81	2.62	2.87
1-1/4"	1/8 NPTF	–	7/16-20 UNF	3/4-16	–	0.25	0.62	0.09	0.88	1.38	2.81	3.47	3.60
1-1/2"	1/8 NPTF	0.25	7/16-20 UNF	3/4-16	–	0.25	0.62	0.09	0.88	1.25	3.00	3.19	3.44
1-3/4"	1/4 NPTF	–	1/2-20 UNF	1-14	–	–	0.75	0.09	1.06	1.63	3.0	4.03	4.15
2"	1/4 NPTF	–	1/2-20 UNF	1-1/4-12	–	0.38	0.81	0.12	1.19	1.47	–	▲	◆

▲ 7.11" for 1" stroke, 10.11" for 2" stroke, 12.34" for 3" stroke, 16.34" for 4" stroke.*

* To determine lengths for half inch stroke increments, determine length for next highest whole number stroke and subtract one half inch.

** For each 1.00" of stroke.

800.696.6165 www.comoso.com

Parker Hannifin Corporation
Pneumatic Division
Wadsworth, Ohio
www.parker.com/pneumatics

Mounting Style RP
Pivot and Nose Mount, Spring Extended

Drawings are representative of cylinders. Certain bore sizes may not look exactly as shown.

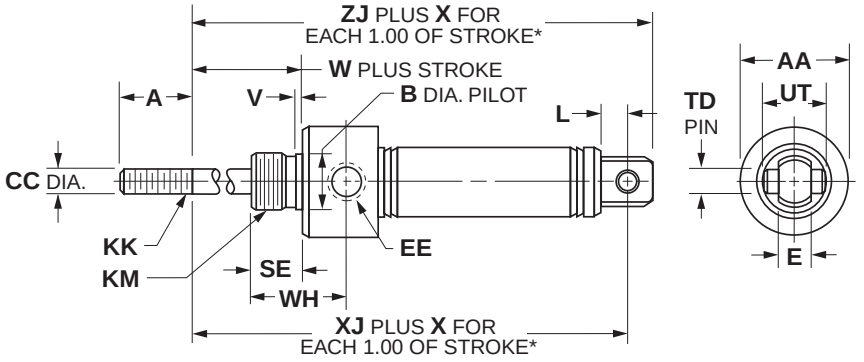

Bore Sizes
5/16"*
7/16"
3/4"

*With Mounting Nuts

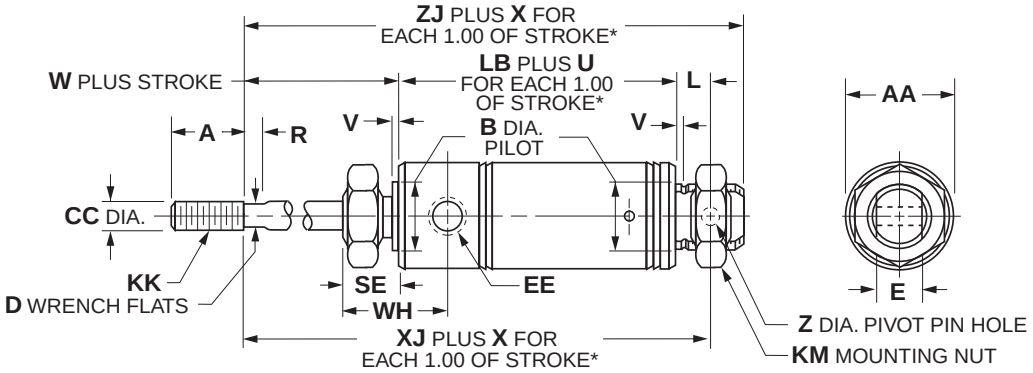

Bore Sizes
9/16"*
7/8"*
1-1/16"*
1-1/4"
1-1/2"*
1-3/4"
2" *

*No Mounting Nuts

Bore	SR	SRM	Std. Stroke (in)	Max Stroke (in)	SS Rod Std	A	AA	B	CC	D	E	EE	KK
5/16"	●		1/2, 1, 1-1/2, 2, 2-1/2, 3	4	✓	0.38	0.50 SQ.	–	0.125	–	0.25	#10-32	#5-40 UNC
7/16"	●		1/2, 1, 1-1/2, 2, 3	6	✓	0.50	0.74	0.437	0.188	–	0.31	#10-32	#10-32 UNF
9/16"	●	●	1/2, 1, 1-1/2, 2, 3	6	✓	0.50	0.62	0.437	0.188	–	0.31	#10-32	#10-32 UNF
3/4"	●	●	1/2, 1, 2, 3, 4	6	✓	0.50	0.86	0.624	0.250	–	0.38	1/8 NPTF	1/4-28 UNF
7/8"	●		1/2, 1, 2, 3, 4	6	✓	0.50	0.93	0.624	0.250	–	0.38	1/8 NPTF	1/4-28 UNF
1-1/16"	●	●	1/2, 1, 1- 1/2, 2, 3, 4	6	✓	0.50	1.12	0.624	0.312	0.25	0.38	1/8 NPTF	5/16-24 UNF
1-1/4"	●	●	1, 2, 3, 4	6	✓	0.75	1.34	0.749	0.437	0.38	0.50	1/8 NPTF	7/16-20 UNF
1-1/2"	●	●	1, 2, 3, 4	6	✓	1.25	1.56	0.749	0.437	0.38	0.62	1/8 NPTF	7/16-20 UNF
2"	●	●	–	4		.88	2.08	1.374	0.625	0.50	0.75	1/4 NPTF	1/2-20 UNF

Bore	KM	L	LB	R	SE	TD	U	UT	V	W	WH	X	XJ		Z	ZJ	
													SR	SRM		SR	SRM
5/16"	3/8-24	0.19	–	–	0.31	–	–	–	–	0.31	0.47	1.25	1.88	–	–	2.04	–
7/16"	7/16-20	0.25	–	–	0.38	0.156	–	0.50	0.05	0.38	0.72	1.44	2.38	–	–	2.62	–
9/16"	7/16-20	0.25	–	–	0.38	–	–	–	0.06	0.38	0.78	2.62	2.28	2.53	0.157	2.47	2.72
3/4"	5/8-18	0.34	–	–	0.50	0.250	–	0.75	0.09	0.50	0.97	2.69	2.44	2.69	–	2.72	2.97
7/8"	5/8-18	0.34	–	–	0.50	0.250	–	0.75	0.09	0.50	0.97	2.56	2.63	–	–	2.91	–
1-1/16"	5/8-18	0.34	–	0.12	0.50	0.250	–	0.75	0.09	0.62	1.06	2.81	2.78	3.03	–	3.06	3.31
1-1/4"	3/4-16	0.41	2.47	0.25	0.62	–	1.81	–	0.09	0.88	1.38	2.81	3.78	3.91	0.251	4.16	4.28
1-1/2"	3/4-16	0.50	–	0.25	0.62	0.375	–	1.00	0.09	0.88	1.25	3.00	3.88	4.13	–	4.25	4.50
2"	1-1/4 -12	0.56	–	0.38	0.81	–	–	–	0.12	1.19	1.47	–	■	✷	0.376	▲	◆

■ 8.05" for 1" stroke, 11.05" for 2" stroke, 13.28" for 3" stroke, 17.28" for 4" stroke*

▲ 8.50" for 1" stroke, 11.50" for 2" stroke, 13.72" for 3" stroke, 17.72" for 4" stroke*

* To determine lengths for half inch stroke increments, determine length for next highest whole number stroke and subtract one half inch.

800.696.6165 www.comoso.com

Parker Hannifin Corporation
Pneumatic Division
Wadsworth, Ohio
www.parker.com/pneumatics

Mounting Style D
Nose Mount, Double Acting

Drawings are representative of cylinders. Certain bore sizes may not look exactly as shown.

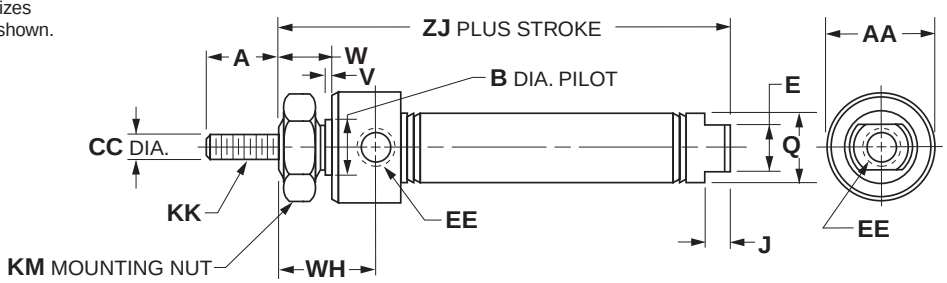

Bore Sizes
5/16"
7/16"
3/4"

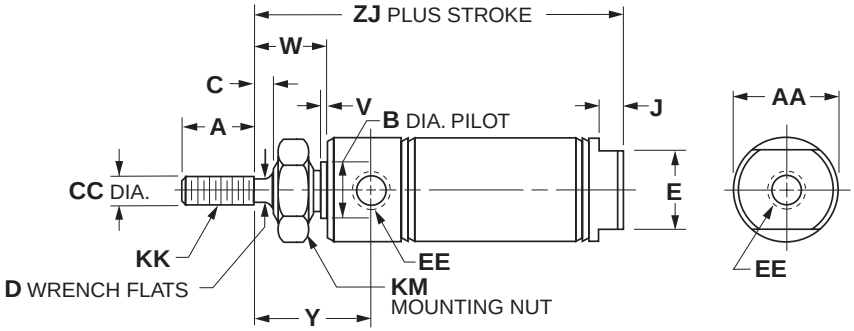

Bore Sizes
9/16"
7/8"
1-1/16"
1-1/4"
1-1/2"
1-3/4"
2" *
2-1/2" *
3" *

*No Mounting Nuts

Bore	SR	SRM	SRD SRDM	Std. Stroke (in)	Max Stroke (in)	SS Rod Std	A	AA	B	C	CC
5/16"	●			1/2, 1, 1-1/2, 2, 2-1/2, 3, 4	4	✓	0.38	0.50 SQ.	–	–	0.125
7/16"	●			1/2, 1, 1-1/2, 2, 3, 4	12	✓	0.50	0.74	0.437	–	0.188
9/16"	●	●	●	1/2, 1, 1-1/2, 2, 3, 4	12	✓	0.50	0.62	0.437	–	0.188
3/4"	●	●	●	1/2, 1, 2, 2-1/2, 3, 4, 5, 6, 8, 10	12	✓	0.50	0.86	0.624	–	0.250
7/8"	●			1/2, 1, 2, 3, 4, 5, 6	12	✓	0.50	0.93	0.624	–	0.250
1-1/16"	●	●	●	1/2, 1, 1-1/2, 2, 2-1/2, 3, 4, 5, 6, 8, 10, 12	12	✓	0.50	1.12	0.624	0.12	0.312
1-1/4"	●	●		1, 2, 3, 4, 5, 6	12	✓	0.75	1.34	0.749	0.25	0.437
1-1/2"	●	●	●	1/2, 1, 2, 3, 4, 5, 6, 8, 10, 12	12	✓	0.75	1.56	0.749	0.25	0.437
1-3/4"	●	●		1/2, 1, 1-1/2, 2, 2-1/2, 3, 4, 5, 6	12		0.88	1.84	1.031	0.31	0.500
2"	●	●	●	–	12		0.88	2.08	1.374	0.38	0.625
2-1/2"	●	●		–	12		0.88	2.62	1.500	0.38	0.625
3"	●			–	12		1.25	3.16	1.630	0.38	0.750

Bore	D	E	EE	J	KK	KM	Q	V	W	WH	Y	ZJ	
												SR	SRM
5/16"	–	–	#10-32	–	#5-40 UNC	3/8-24	0.36	–	0.31	0.47	–	1.64	–
7/16"	–	0.38	#10-32	0.19	#10-32 UNF	7/16-20	0.50	0.05	0.38	0.72	–	2.12	–
9/16"	–	0.50	#10-32	0.19	#10-32 UNF	7/16-20	–	0.06	0.38	0.78	–	2.28	2.53
3/4"	–	0.62	1/8 NPTF	0.19	1/4-28 UNF	5/8-18	0.81	0.09	0.50	0.97	–	2.97	2.97
7/8"	–	0.62	1/8 NPTF	0.19	1/4-28 UNF	5/8-18	–	0.09	0.50	0.97	–	2.94	–
1-1/16"	0.25	0.88	1/8 NPTF	0.19	5/16-24 UNF	5/8-18	–	0.09	0.62	–	1.19	3.25	3.41
1-1/4"	0.38	0.88	1/8 NPTF	0.25	7/16-20 UNF	3/4-16	–	0.09	0.88	–	1.62	4.00	4.03
1-1/2"	0.38	0.88	1/8 NPTF	0.25	7/16-20 UNF	3/4-16	–	0.09	0.88	–	1.50	3.69	3.94
1-3/4"	7/16	1.25	1/4 NPTF	0.25	1/2-20 UNF	1-14	–	0.09	1.06	1.63	–	4.69	4.69
2"	0.50	1.25	1/4 NPTF	0.31	1/2-20 UNF	1-1/4-12	–	0.12	1.19	–	1.84	4.69	4.97
2-1/2"	1/2	1.75	1/4 NPTF	0.31	1/2-20 UNF	1-3/8-12	–	0.13	1.19	–	1.84	4.69	4.69
3"	5/8	2.00	3/8 NPTF	0.31	5/8-18 UNF	1-1/2-12	–	0.19	1.38	–	2.09	5.25	–

800.696.6165 www.comoso.com

Parker Hannifin Corporation
Pneumatic Division
Wadsworth, Ohio
www.parker.com/pneumatics

D

Mounting Style DP
Pivot and Nose Mount, Double Acting, Pivot Pin

Drawings are representative of cylinders. Certain bore sizes may not look exactly as shown.

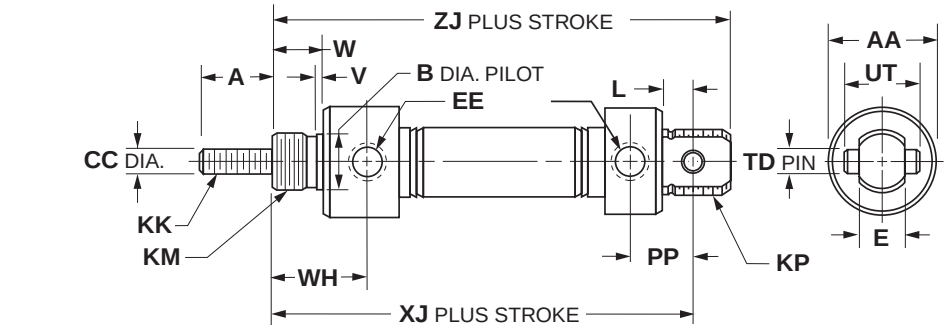

Bore Sizes
7/16"
3/4"

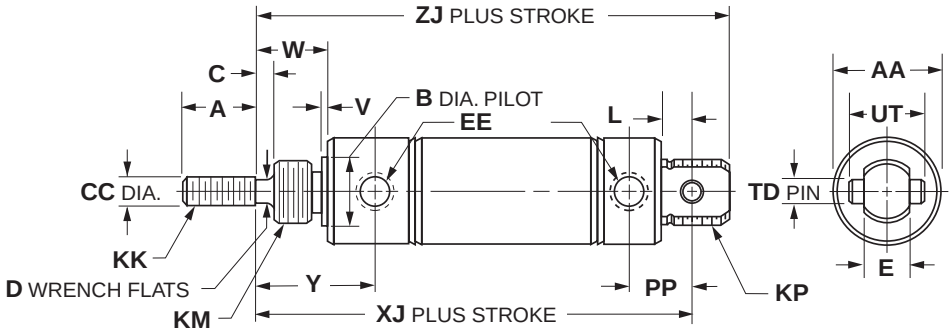

Bore Sizes
1-1/16"
1-1/2"

Bore	SR	SRM	Std. Stroke (in)	Max Stroke (in)	SS Rod	A	AA	B	CC	D	E
7/16"	●		1/2, 1, 1-1/2, 2, 3, 4	12	✓	0.50	0.74	0.437	0.188	–	0.31
3/4"	●	●	1/2, 1, 2, 2-1/2, 3, 4, 5, 6, 8, 10	12	✓	0.50	0.86	0.624	0.250	–	0.38
1-1/16"	●	●	1/2, 1, 1-1/2, 2, 2-1/2, 3, 4, 5, 6, 8, 10, 12	12	✓	0.50	1.12	0.624	0.312	0.25	0.38
1-1/2"	●	●	1, 2, 3, 4, 5, 6, 8, 10, 12	12	✓	0.75	1.56	0.749	0.437	0.38	0.62

Bore	EE	KK	KM	KP	L	PP	TD	UT	V	W	WH	XJ		Y	ZJ	
												SR	SRM		SR	SRM
7/16"	#10-32	#10-32 UNF	7/16-20	7/16-20 UNF	0.25	0.44	0.156	0.50	0.05	0.38	0.72	2.56	–	–	2.81	–
3/4"	1/8 NPTF	1/4-28 UNF	5/8-18	5/8-18 UNF	0.34	0.62	0.250	0.75	0.09	0.50	0.97	3.75	3.75	–	4.03	4.03
1-1/16"	1/8 NPTF	5/16-24 UNF	5/8-18	5/8-18 UNF	0.34	0.62	0.250	0.75	0.09	0.62	–	3.84	4.00	1.19	4.12	4.28
1-1/2"	1/8 NPTF	7/16-20 UNF	3/4-16	–	0.50	0.81	0.375	1.00	0.09	0.87	–	4.38	4.63	1.50	4.75	5.00

800.696.6165 www.comoso.com

Parker Hannifin Corporation
Pneumatic Division
Wadsworth, Ohio
www.parker.com/pneumatics

Mounting Style DXP

Pivot & Nose Mount, Double Acting, No Pivot Pin

Drawings are representative of cylinders. Certain bore sizes may not look exactly as shown.

NOTE: Strokes over 12" must be supported at both ends.

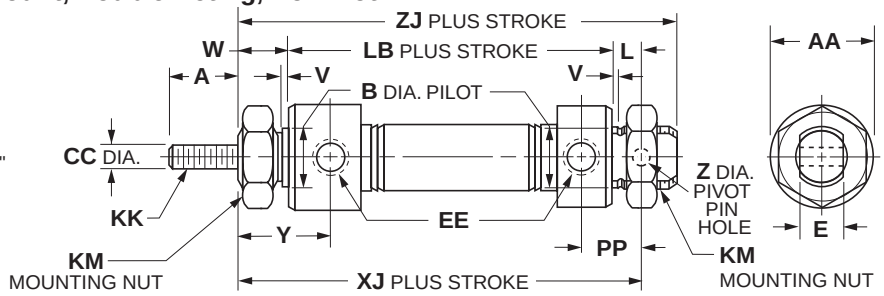

Bore Sizes
5/16"
7/16"
3/4"

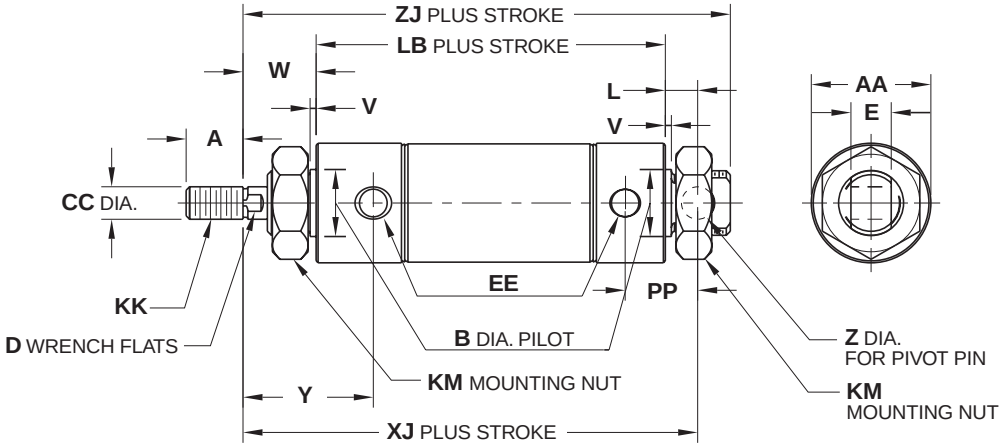

Bore Sizes
9/16"*
7/8"
1-1/16"
1-1/4"
1-1/2"
1-3/4"
2" *
2-1/2" *
3" *

*No Mounting Nuts

Bore	SR	SRM	SRD SRDM	Std. Stroke (in)	Max Stroke (in)	SS Rod Std	A	AA	B	CC	D	E
5/16"	●			1/2, 1, 1-1/2, 2, 2-1/2, 3, 4	4	✓	0.38	0.50 SQ.	–	0.125	–	0.25
7/16"	●			1/2, 1, 1-1/2, 2, 3, 4	12	✓	0.50	0.74	0.437	0.188	–	0.31
9/16"	●	●	●	1/2, 1, 1-1/2, 2, 3, 4	12	✓	0.50	0.62	0.437	0.188	–	0.31
3/4"	●	●	●	1, 2, 3, 4, 5, 6, 8, 10	32	✓	0.50	0.86	0.624	0.250	–	0.38
7/8"	●			1, 2, 3, 4, 5, 6, 8, 10	32	✓	0.50	0.93	0.624	0.250	–	0.38
1-1/16"	●	●	●	1/2, 1, 1-1/2, 2, 2-1/2, 3, 4, 5, 6, 8, 10, 12	32	✓	0.50	1.12	0.624	0.312	0.25	0.38
1-1/4"	●	●		1, 2, 3, 4, 5, 6, 7, 8, 10, 12	32	✓	0.75	1.34	0.749	0.437	0.38	0.50
1-1/2"	●	●	●	–	32	✓	0.75	1.56	0.749	0.437	0.38	0.62
1-3/4"	●	●		1, 2, 3, 4, 5, 6, 8, 10, 12	32		0.88	1.84	1.031	0.500	7/16	0.62
2"	●	●	●	–	32		0.88	2.08	1.374	0.625	0.50	0.75
2-1/2"	●	●		–	32		0.88	2.62	1.500	0.625	1/2	0.75
3"	●			–	32		1.25	3.16	1.630	0.750	5/8	0.88

Bore	EE	KK	KM	L	LB	PP	V	W	XJ		Y	Z	ZJ	
									SR	SRM			SR	SRM
5/16"	#10-32	#5-40 UNC	3/8-24	0.19	–	0.34	–	0.31	2.03	–	–	0.125	2.19	–
7/16"	#10-32	#10-32 UNF	7/16-20	0.25	1.94	0.44	0.05	0.38	2.56	–	0.72	0.157	2.81	–
9/16"	#10-32	#10-32 UNF	7/16-20	0.25	–	0.38	0.06	0.38	2.56	2.81	0.78	0.157	2.75	3.00
3/4"	1/8 NPTF	1/4-28 UNF	5/8-18	0.34	2.91	0.62	0.09	0.50	3.75	3.75	0.97	0.251	4.03	4.03
7/8"	1/8 NPTF	1/4-28 UNF	5/8-18	0.34	–	0.62	0.09	0.50	3.56	–	0.97	0.251	3.84	–
1-1/16"	1/8 NPTF	5/16-24 UNF	5/8-18	0.34	–	0.62	0.09	0.62	3.84	–	1.19	0.251	4.12	4.28
1-1/4"	1/8 NPTF	7/16-20 UNF	3/4-16	0.41	–	0.78	0.09	0.88	4.72	4.75	1.62	0.251	5.12	5.16
1-1/2"	1/8 NPTF	7/16-20 UNF	3/4-16	0.50	–	0.81	0.09	0.88	4.38	4.63	1.50	0.376	4.75	5.00
1-3/4"	1/4 NPTF	1/2-20 UNF	1-14	0.50	4.19	1.12	0.09	1.06	5.75	5.75	1.94	0.376	6.25	6.25
2"	1/4 NPTF	1/2-20 UNF	1-1/4-12	0.56	–	1.03	0.12	1.19	5.62	5.91	–	0.376	6.06	6.34
2-1/2"	1/4 NPTF	1/2-20 UNF	1-3/8-12	0.56	–	1.03	0.13	1.19	5.62	5.62	1.84	0.376	6.06	6.06
3"	3/8 NPTF	5/8-18 UNF	1-1/2-12	0.81	–	1.34	0.19	1.38	6.50	–	2.09	0.500	7.12	–

800.696.6165 www.comoso.com

Parker Hannifin Corporation
Pneumatic Division
Wadsworth, Ohio
www.parker.com/pneumatics

D

Mounting Style DX
Threaded Both Ends, Double Acting

Drawing represents 1-1/2" bore size. For other sizes, reference art for DXP on previous page.

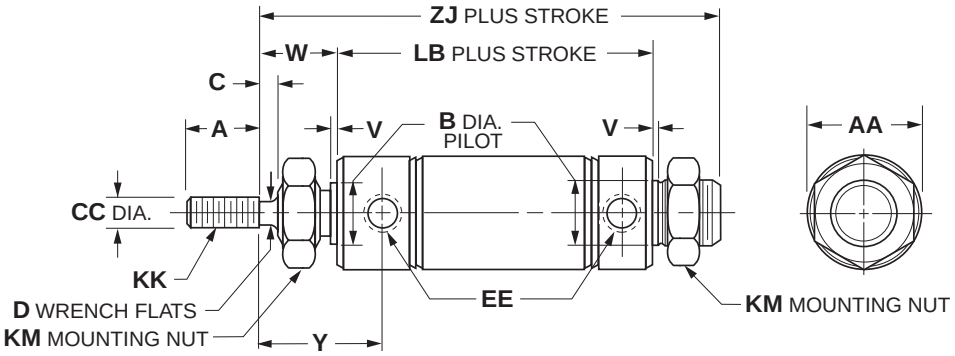

Bore	SR	SRM	Std. Stroke (in)	Max Stroke (in)	SS Rod Std
7/16" *	●		1/2, 1, 1-1/2, 2, 3, 4	12	✓
9/16" *	●	●	1/2, 1, 1-1/2, 2, 3, 4	12	✓
3/4" *	●	●	1, 2, 3, 4, 5, 6, 8, 10	32	✓
7/8" *	●	●	1, 2, 3, 4, 5, 6, 8, 10	32	✓
1-1/16" *	●	●	1/2, 1, 1-1/2, 2, 2-1/2, 3, 4, 5, 6, 8, 10, 12	32	✓
1-1/4" *	●	●	1, 2, 3, 4, 5, 6, 7, 8, 10, 12	32	✓
1-1/2"	●	●	1, 2, 3, 4, 5, 6, 8, 10, 12	32	✓
2" *	●	●	–	32	

Bore	A	AA	B	C	CC	D	EE	KK	KM	LB		V	W	Y	ZJ	
										SR	SRM				SR	SRM
7/16" *	0.50	0.74	0.437	–	0.188	–	#10-32	#10-32 UNF	7/16-20	1.94		0.05	0.38	0.72	2.81	
9/16" *	0.50	0.62	0.437	–	0.188	–	#10-32	#10-32 UNF	7/16-20	–		0.06	0.38	0.78	2.75	
3/4" *	0.50	0.86	0.624	–	0.250	–	1/8 NPTF	1/4-28 UNF	5/8-18	2.91		0.09	0.50	0.97	4.03	
7/8" *	0.50	0.93	0.624	–	0.250	–	1/8 NPTF	1/4-28 UNF	5/8-18	–		0.09	0.50	0.97	3.84	
1-1/16" *	0.50	1.12	0.624	0.12	0.312	0.25	1/8 NPTF	5/16-24 UNF	5/8-18	–		0.09	0.62	1.19	4.12	
1-1/4" *	0.75	0.34	0.749	0.25	0.437	0.38	1/8 NPTF	7/16-20 UNF	3/4-16	–		0.09	0.88	1.62	5.12	
1-1/2"	0.75	1.56	0.749	0.25	0.437	0.38	1/8 NPTF	7/16-20 UNF	3/4-16	3.00		0.09	0.88	1.50	4.50	
2" *	0.88	2.08	1.374	0.38	0.625	0.50	1/4 NPTF	1/2-20 UNF	1-1/4-12	–		0.12	1.19	–	6.06	

* Available upon request.
Please consult factory.

800.696.6165 www.comoso.com

Parker Hannifin Corporation
Pneumatic Division
Wadsworth, Ohio
www.parker.com/pneumatics

C086

Mounting Style KDX
Threaded Both Ends, Double Acting, Double Rod

Drawings are representative of cylinders. Certain bore sizes may not look exactly as shown.

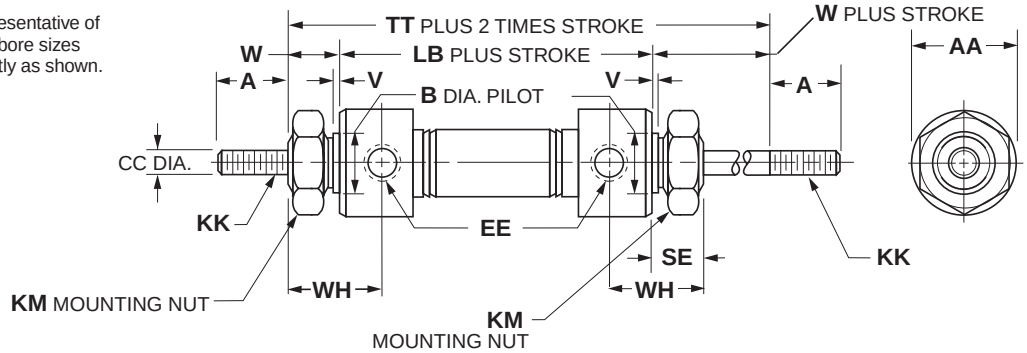

Bore Sizes
7/16"
3/4"

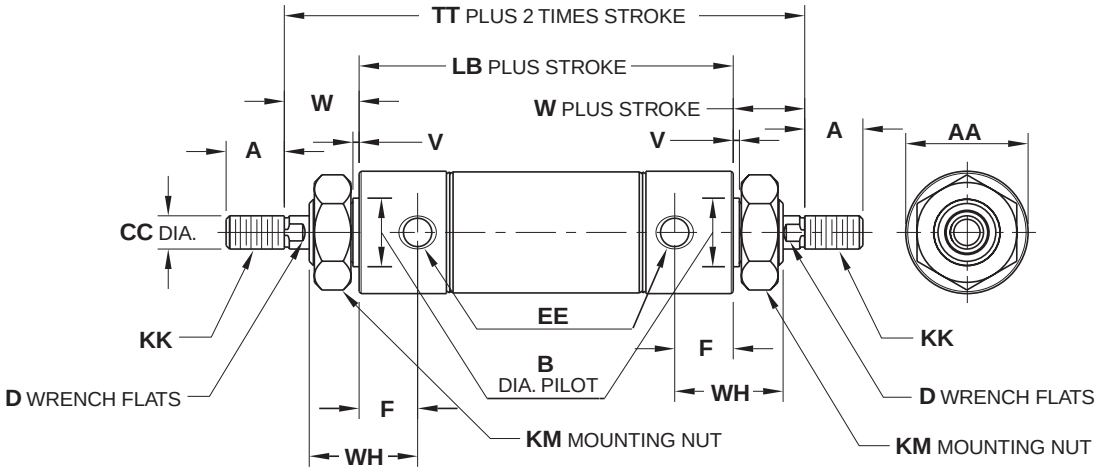

Bore Sizes
9/16"
7/8"
1-1/16"
1-1/4"
1-1/2"
1-3/4"
2" *
2-1/2" *
3" *

*No Mounting Nut

Bore	SR	SRM	SRD SRDM	Std. Stroke (in)	Max Stroke (in)	SS Rod	A	AA	B	CC
7/16"	●			1/2, 1, 1-1/2, 2, 3, 4	6	✓	0.50	0.74	0.437	0.188
9/16"	●	●	●	1/2, 1, 1-1/2, 2, 3, 4	6	✓	0.50	0.62	0.437	0.188
3/4"	●	●	●	1, 2, 3, 4, 5, 6	12	✓	0.50	0.86	0.624	0.250
7/8"	●			1, 2, 3, 4, 6	12	✓	0.50	0.93	0.624	0.250
1-1/16"	●	●	●	1, 2, 3, 4, 5, 6	12	✓	0.50	1.12	0.624	0.312
1-1/4"	●	●		1, 2, 3, 4, 5, 6	12	✓	0.75	1.34	0.749	0.437
1-1/2"	●	●	●	1, 2, 3, 4, 5, 6	12	✓	0.75	1.56	0.749	0.437
1-3/4"	●	●		1, 2, 3, 4, 5, 6	12	✓	0.88	1.84	1.031	0.500
2"	●	●	●	–	12	✓	0.88	2.08	1.374	0.625
2-1/2"	●	●		–	18	✓	0.88	2.62	1.500	0.625
3"	●			–	12	✓	1.25	3.16	1.630	0.750

Bore	D	EE	F	KK	KM	LB		SE	TT		V	W	WH
						SR	SRM		SR	SRM			
7/16"	–	#10-32	0.34	#10-32 UNF	7/16-20	2.06	–	0.38	2.81	–	0.05	0.38	0.72
9/16"	–	#10-32	0.40	#10-32 UNF	7/16-20	2.19	2.44	0.38	2.94	3.19	0.06	0.38	0.78
3/4"	–	1/8 NPTF	0.47	1/4-28 UNF	5/8-18	3.00	3.00	0.50	4.00	4.00	0.09	0.50	0.97
7/8"	–	1/8 NPTF	0.47	1/4-28 UNF	5/8-18	2.91	–	0.50	3.91	–	0.09	0.50	0.97
1-1/16"	0.25	1/8 NPTF	0.56	5/16-24 UNF	5/8-18	2.75	3.28	0.50	4.00	4.53	0.09	0.62	1.19
1-1/4"	0.38	1/8 NPTF	0.75	7/16-20 UNF	3/4-16	3.81	3.84	0.63	5.56	5.59	0.09	0.88	1.62
1-1/2"	0.38	1/8 NPTF	0.62	7/16-20 UNF	3/4-16	3.38	3.63	0.63	5.12	5.38	0.09	0.88	1.50
1-3/4"	7/16	1/4 NPTF	0.88	1/2-20 UNF	1-14	4.44	4.44	0.75	6.56	6.56	0.09	1.06	1.63
2"	0.50	1/4 NPTF	0.65	1/2-20 UNF	1-1/4-12	4.19	4.47	–	6.56	6.84	0.12	1.19	1.84
2-1/2"	1/2	1/4 NPTF	0.65	1/2-20 UNF	1-3/8-12	4.19	4.19	–	6.56	6.56	0.13	1.19	1.84
3"	5/8	3/8 NPTF	0.71	5/8-18 UNF	1-1/2-12	4.56	–	–	7.31	–	0.19	1.38	1.72

800.696.6165 www.comoso.com

Parker Hannifin Corporation
Pneumatic Division
Wadsworth, Ohio
www.parker.com/pneumatics

D

Mounting Style KDXH
Threaded Both Ends, Double Rod, Hollow Rod

Drawings are representative of cylinders. Certain bore sizes may not look exactly as shown.

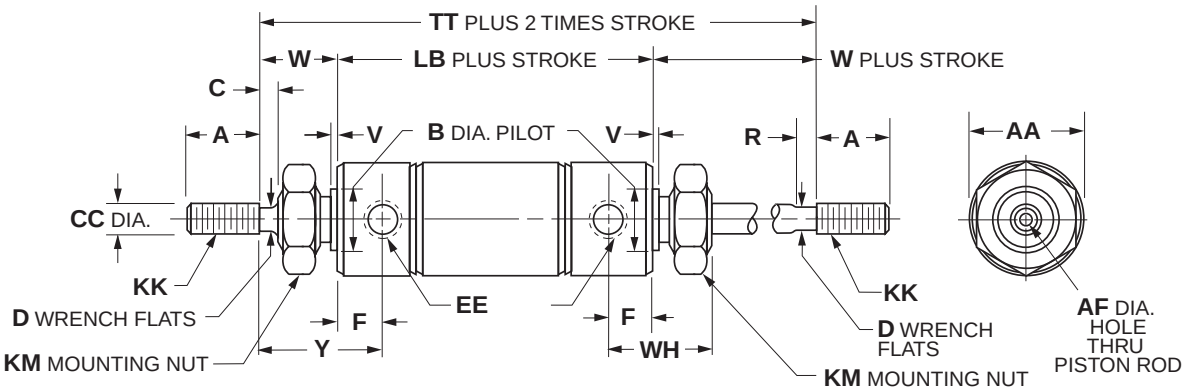

Bore	SR	SRM	Std. Stroke (in)	Max Stroke (in)	SS Rod	A	AA	AF	B	C	CC
1-1/16"	●	●	1, 2, 3, 4, 5, 6	12	N/A	0.50	1.12	0.187	0.624	0.12	0.312
1-1/4"	●	●	1, 2, 3, 4, 5, 6	12	N/A	0.75	1.34	0.250	0.749	0.25	0.437
1-1/2"	●	●	1, 2, 3, 4, 5, 6	12	N/A	0.75	1.56	0.250	0.749	0.25	0.437
1-3/4"	●	●	1, 2, 3, 4, 5, 6	12	N/A	0.88	1.84	0.328	1.031	0.38	0.500

Bore	D	EE	F	KK	KM	LB		R	TT		V	W	WH	Y
						SR	SRM		SR	SRM				
1-1/16"	0.25	1/8 NPTF	0.56	5/16-24 UNF	5/8-18	2.75	3.28	0.12	4.00	4.53	0.09	0.62	1.06	1.19
1-1/4"	0.38	1/8 NPTF	0.75	7/16-20 UNF	3/4-16	3.81	3.84	0.25	5.56	5.59	0.09	0.88	1.38	1.62
1-1/2"	0.38	1/8 NPTF	0.62	7/16-20 UNF	3/4-16	3.38	3.63	0.25	5.12	5.38	0.09	0.88	1.25	1.50
1-3/4"	7/16	1/4 NPTF	0.88	1/2-20 UNF	1-14	4.44	4.44	–	6.56	6.56	0.09	1.06	1.63	1.63

800.696.6165 www.comoso.com

Parker Hannifin Corporation
Pneumatic Division
Wadsworth, Ohio
www.parker.com/pneumatics

Mounting Style A
Nose Mount, Spring Return, Head Adjustable Stroke

Drawings are representative of cylinders. Certain bore sizes may not look exactly as shown.

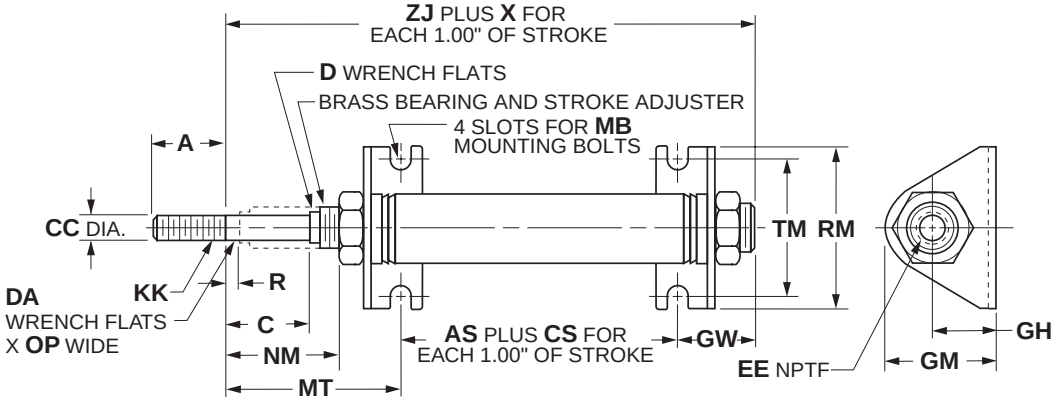

Bore	SR	SRM	Std. Stroke	Max Stroke (in)	SS Rod Std
3/4"	●		Stroke adjustment in 1" increments to 3": 1" stroke adjusts 0-1" 2" stroke adjusts 1-2" 3" stroke adjusts 2-3"	6	✓
1-1/16"	●			6	✓
1-1/2"	●			6	✓

Bore	A	AS	C	CC	CS	D	EE	GH	GM	GW
3/4"	0.50	–	1.19	0.250	1.69	–	1/8 NPTF	0.81	1.38	0.88
1-1/16"	0.50	0.32	1.25	0.312	1.56	0.25	1/8 NPTF	0.81	1.38	0.93
1-1/2"	0.75	0.19	1.25	0.437	2.00	0.62	1/8 NPTF	1.00	1.78	1.25

Bore	KK	MB	MT	NM	OP	R	RM	TM	X	ZJ
3/4"	1/4-28 UNF	0.250	2.38	1.44	–	0.19	1.88	1.50	1.69	3.12
1-1/16"	5/16-24 UNF	0.250	2.38	1.44	0.12	0.25	1.88	1.50	1.56	3.63
1-1/2"	7/16-20 UNF	0.250	2.56	1.50	–	0.25	2.50	1.88	2.00	4.00

800.696.6165 www.comoso.com

Parker Hannifin Corporation
Pneumatic Division
Wadsworth, Ohio
www.parker.com/pneumatics

D

Mounting Style RA
Nose Mount, Spring Return, Cap Adjustable Stroke

Drawings are representative of cylinders. Certain bore sizes may not look exactly as shown.

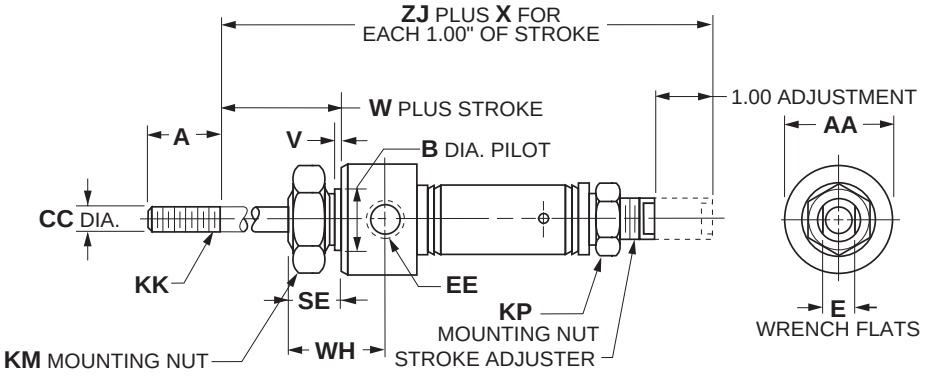

Bore Sizes
3/4"

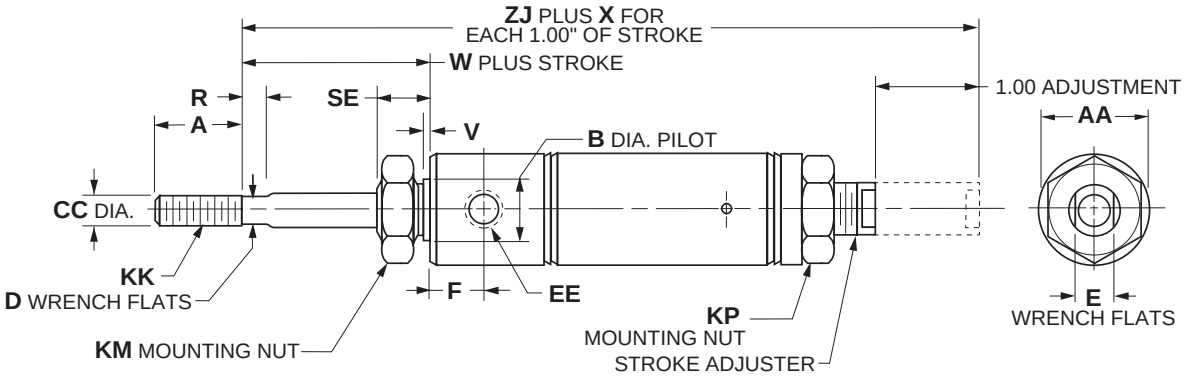

Bore Sizes
1-1/16"
1-1/2"

Bore	SR	SRM	Std. Stroke	Max Stroke (in)	SS Rod Std
3/4"	●		Stroke adjustment in 1" increments to 3": 1" stroke adjusts 0-1" 2" stroke adjusts 1-2" 3" stroke adjusts 2-3"	6	✓
1-1/16"	●			6	✓
1-1/2"	●			6	✓

Bore	A	AS	AA	B	CC	D	E	EE	F
3/4"	0.50	1.69	0.86	0.624	0.250	–	0.34	1/8 NPTF	–
1-1/16"	0.50	0.32	1.12	0.624	0.312	0.25	0.50	1/8 NPTF	0.56
1-1/2"	1.25	0.19	1.56	0.749	0.437	0.38	0.62	1/8 NPTF	0.62

3/4"	KK	KM	SE	R	V	W	WH	X	ZJ
1-1/16"	1/4-28 UNF	5/8-18	0.50	–	0.09	0.53	0.97	2.69	3.78
1-1/2"	5/16-24 UNF	5/8-18	0.50	0.12	0.09	0.50	–	2.56	4.03
1-1/2"	7/16-20 UNF	3/4-16	0.62	0.25	0.09	0.88	–	2.00	5.81

800.696.6165 www.comoso.com

Parker Hannifin Corporation
Pneumatic Division
Wadsworth, Ohio
www.parker.com/pneumatics

Mounting Style AP
Pivot Mount, Spring Return, Head Adjustable Stroke

Drawings are representative of cylinders. Certain bore sizes may not look exactly as shown.

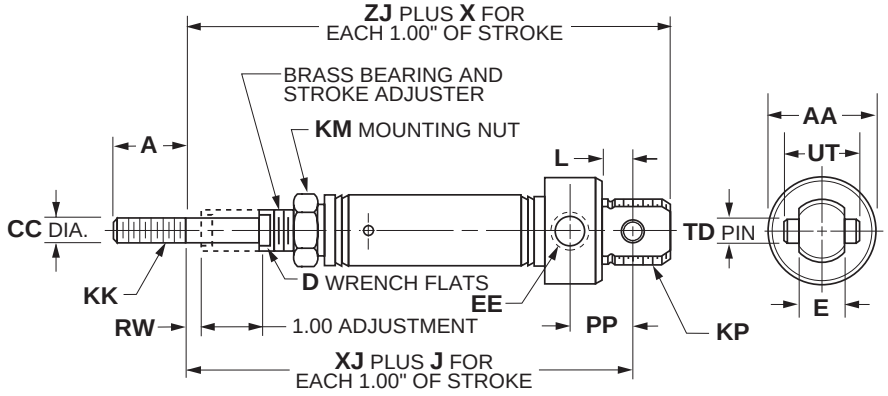

Bore Sizes
3/4"

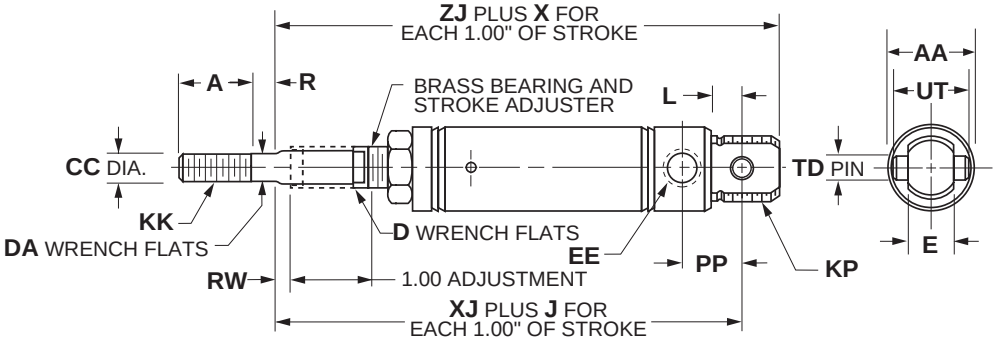

Bore Sizes
1-1/16"
1-1/2"

Bore	SR	SRM	Std. Stroke	Max Stroke (in)	SS Rod Std
3/4"	●		Stroke adjustment in 1" increments to 3": 1" stroke adjusts 0-1" 2" stroke adjusts 1-2" 3" stroke adjusts 2-3"	6	✓
1-1/16"	●			6	✓
1-1/2"	●			6	✓

Bore	A	AA	CC	D	DA	E	EE	J	KK
3/4"	0.50	0.86	0.250	0.34	–	0.38	1/8 NPTF	1.69	1/4-28 UNF
1-1/16"	0.50	1.12	0.312	0.50	0.25	0.38	1/8 NPTF	1.56	5/16-24 UNF
1-1/2"	0.75	1.56	0.437	0.62	0.38	0.62	1/8 NPTF	2.00	7/16-20 UNF

Bore	KM	KP	L	OP	PP	R	RW	TD	UT	X	XJ	ZJ
3/4"	7/16-20	5/8-18 UNF	0.34	–	0.62	0.19	0.19	0.250	0.75	1.69	3.65	3.93
1-1/16"	–	5/8-18 UNF	0.34	0.25	0.62	0.12	0.25	0.250	0.75	1.56	3.97	4.25
1-1/2"	3/4-16	–	0.50	–	0.81	0.25	0.25	0.375	1.00	2.00	4.31	4.69

800.696.6165 www.comoso.com

Parker Hannifin Corporation
Pneumatic Division
Wadsworth, Ohio
www.parker.com/pneumatics

D

Mounting Style BRN
Rear Block Mount, Single Acting, Spring Return

Drawings are representative of cylinders. Certain bore sizes may not look exactly as shown.

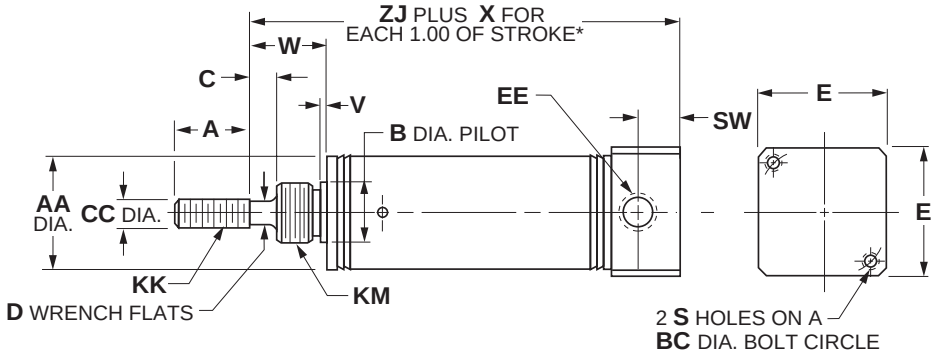

Bore	SR	SRM	Std. Stroke (in)	Max Stroke (in)	SS Rod Std
7/16"	●		1/2, 1, 2, 3, 4	6	✓
3/4"	●	●	1, 2, 3, 4	6	✓
1-1/16"	●	●	1, 2, 3, 4	6	✓
1-1/2"	●	●	1, 2, 3, 4	6	✓

Bore	A	AA	B	C	CC	D	E	EE
7/16"	0.50	0.5	0.374	–	0.188	–	0.75	#10-32
3/4"	0.75	0.81	0.499	0.25	0.250	0.22	1.00	1/8 NPTF
1-1/16"	0.75	1.12	0.624	0.38	0.312	0.25	1.25	1/8 NPTF
1-1/2"	1.25	1.56	0.749	0.25	0.437	0.38	1.75	1/4 NPTF

Bore	KK	KM	SW	V	W	X	ZJ	
							SR	SRM
7/16"	#10-32 UNF	3/8-24	0.38	0.05	0.31	0.94	1.62	–
3/4"	1/4-28 UNF	1/2-20	0.44	0.09	0.62	1.69	2.31	2.56
1-1/16"	5/16-24 UNF	5/8-18	0.44	0.09	0.88	1.81	2.81	3.06
1-1/2"	7/16-20 UNF	3/4-16	0.62	0.09	0.88	2.00	3.06	3.31

* To determine lengths for half inch stroke increments, determine length for next highest whole number stroke and subtract one half inch.

800.696.6165 www.comoso.com

Parker Hannifin Corporation
Pneumatic Division
Wadsworth, Ohio
www.parker.com/pneumatics

Mounting Style BRR
Rear Block Mount, Single Acting, Spring Extend

Drawings are representative of cylinders. Certain bore sizes may not look exactly as shown.

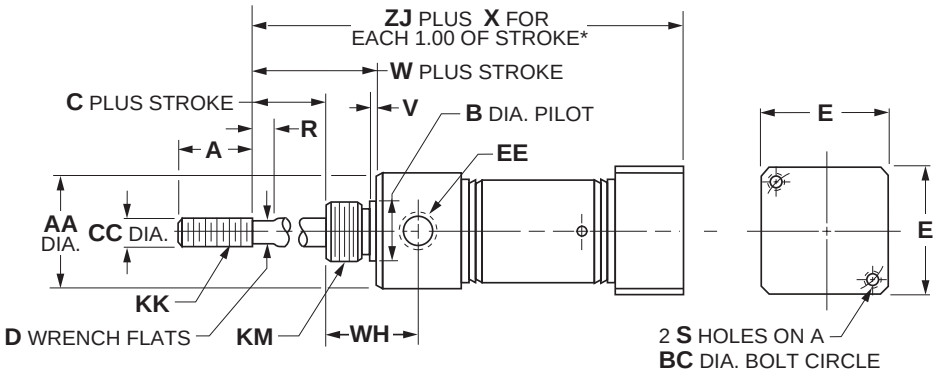

Bore	SR	SRM	Std. Stroke (in)	Max Stroke (in)	SS Rod Std
3/4"	●	●	1, 2, 3, 4	6	✓
1-1/16"	●	●	1, 2, 3, 4	6	✓
1-1/2"	●	●	1, 2, 3, 4	6	✓

Bore	A	AA	B	BC	C	CC	D	E	EE
3/4"	0.75	0.86	0.624	1.00	0.25	0.250	0.22	1.00	1/8 NPTF
1-1/16"	0.75	1.12	0.624	1.25	0.38	0.312	0.25	1.25	1/8 NPTF
1-1/2"	1.25	1.56	0.749	1.75	0.25	0.437	0.38	1.75	1/4 NPTF

Bore	KK	KM	R	S	V	W	WH	X	ZJ	
									SR	SRM
3/4"	1/4-28 UNF	5/8-18	0.25	#10-32 UNF	0.09	0.75	0.97	2.69	3.22	3.47
1-1/16"	5/16-24 UNF	5/8-18	0.25	#10-32 UNF	0.09	0.88	1.06	2.81	3.53	3.78
1-1/2"	7/16-20 UNF	3/4-16	0.25	1/4-20 UNC	0.09	0.88	1.25	3.00	3.88	4.13

* To determine lengths for half inch stroke increments, determine length for next highest whole number stroke and subtract one half inch.

800.696.6165 www.comoso.com

Parker Hannifin Corporation
Pneumatic Division
Wadsworth, Ohio
www.parker.com/pneumatics

Mounting Style BFD
Front Block Mount, Double Acting

Drawings are representative of cylinders. Certain bore sizes may not look exactly as shown.

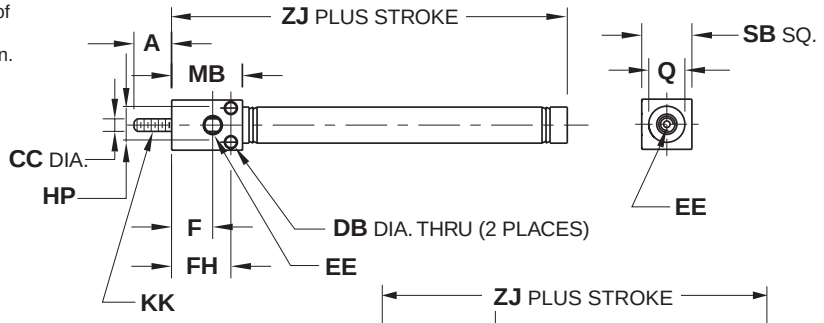

Bore Sizes
5/16"

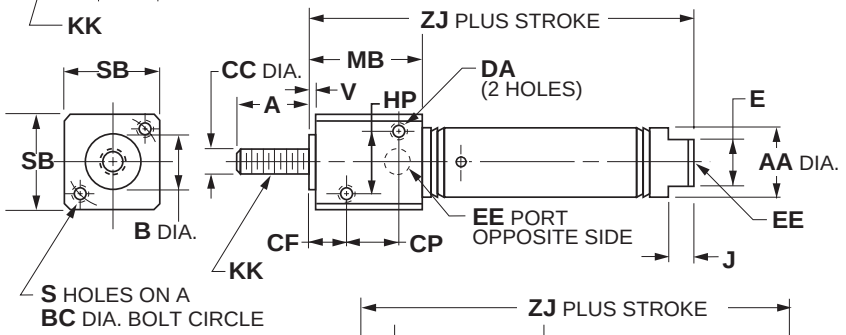

Bore Sizes
7/16"

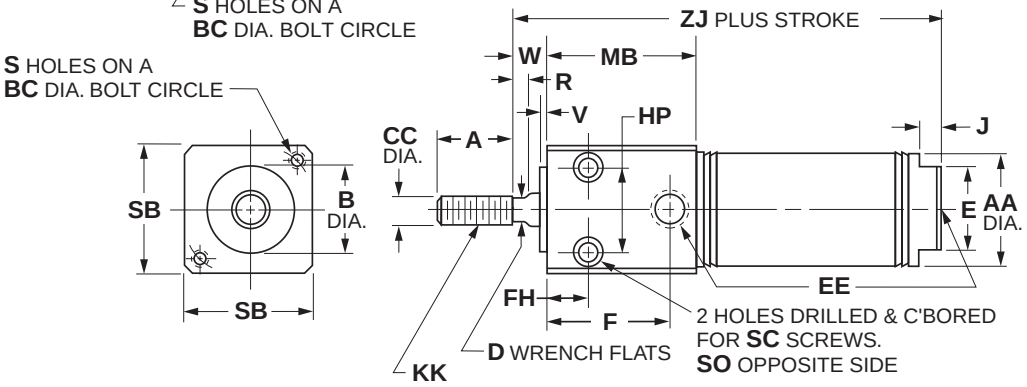

Bore Sizes
3/4"
1-1/16"
1-1/2"

Bore	SR	SRM	Std. Stroke (in)	Max Stroke (in)	SS Rod Std	A	AA	B	BC	CC
5/16"	●		1/2, 1, 1-1/2, 2, 2-1/2, 3, 4	4	✓	0.38	–	–	–	0.125
7/16"	●		1/2, 1, 1-1/2, 2, 3, 4	12	✓	0.50	0.50	0.437	0.75	0.188
3/4"	●	●	1/2, 1, 2, 3, 4, 5, 6	12	✓	0.75	0.81	0.624	1.00	0.250
1-1/16"	●	●	1, 2, 3, 4, 5, 6	12	✓	0.75	1.12	0.750	1.25	0.312
1-1/2"	●	●	1, 2, 3, 4, 5, 6	12	✓	1.25	1.56	1.00	1.75	0.437

Bore	CF	CP	D	DA	DB	E	EE	F	FH	HP	J
5/16"	–	–	–	–	0.11	–	#10-32	0.41	0.59	0.34	–
7/16"	0.31	0.44	–	#8-32	–	0.38	#10-32	–	0.31	0.44	0.19
3/4"	–	–	0.22	–	–	0.62	1/8 NPTF	0.88	0.38	0.62	0.19
1-1/16"	–	–	0.25	–	–	0.88	1/8 NPTF	1.16	0.62	0.81	0.19
1-1/2"	–	–	0.38	–	–	0.88	1/4 NPTF	1.53	0.88	1.12	0.25

Bore	KK	MB	Q	R	S	SB	SC	SO	V	W	ZJ	
											SR	SRM
5/16"	#5-40 UNC	0.71	0.36	–	–	0.50 SQ	–	–	–	–	1.72	–
7/16"	#10-32 UNF	0.88	–	–	#8-32 UNC	0.75	–	–	0.062	–	2.12	–
3/4"	1/4-28 UNF	1.12	–	–	#10-32 UNF	1.00	#10-32	1/4-20 UNC	0.093	0.34	3.22	3.22
1-1/16"	5/16-24 UNF	1.41	–	0.25	#10-32 UNF	1.25	#10-32	1/4-20 UNC	0.093	0.47	3.75	3.91
1-1/2"	7/16-20 UNF	1.88	–	–	1/4-20 UNC	1.75	1/4-20	5/16-18 UNC	0.125	0.38	4.19	4.44

800.696.6165 www.comoso.com

Parker Hannifin Corporation
Pneumatic Division
Wadsworth, Ohio
www.parker.com/pneumatics

Mounting Style BRD
Rear Block Mount, Double Acting

Drawings are representative of cylinders. Certain bore sizes may not look exactly as shown.

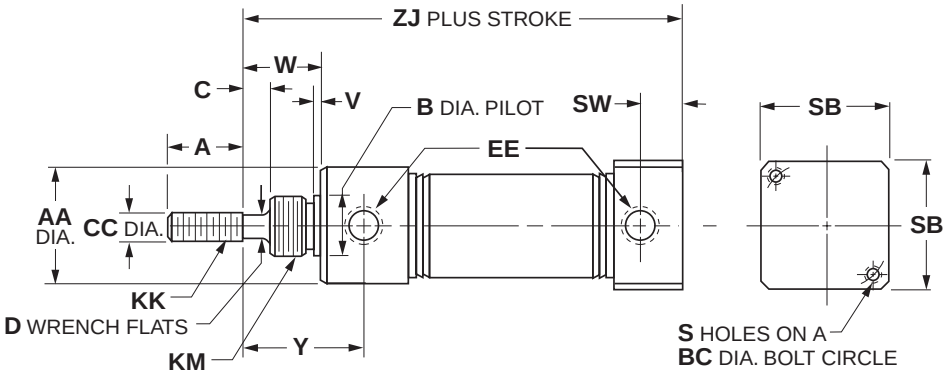

Bore	SR	SRM	Std. Stroke (in)	Max Stroke (in)	SS Rod Std
7/16"	●		1/2, 1, 2, 3, 4	12	✓
3/4"	●	●	1, 2, 3, 4, 5, 6	12	✓
1-1/16"	●	●	1, 2, 3, 4	12	✓
1-1/2"	●	●	1, 2, 3, 4, 5, 6	12	✓

Bore	A	AA	B	BC	C	CC	D	EE	KK
7/16"	0.50	0.74	0.437	0.75	–	0.188	–	#10-32	#10-32 UNF
3/4"	0.75	0.86	0.624	1.00	0.25	0.250	0.22	1/8 NPTF	1/4-28 UNF
1-1/16"	0.75	1.12	0.624	1.25	0.38	0.312	0.25	1/8 NPTF	5/16-24 UNF
1-1/2"	1.25	1.56	0.749	1.75	0.25	0.437	0.38	1/4 NPTF	7/16-20 UNF

Bore	KM	S	SB	SW	V	W	Y	ZJ	
								SR	SRM
7/16"	7/16-20 UNF	#8-32 UNC	0.75	0.38	0.05	0.43	0.72	2.44	–
3/4"	5/8-18 UNF	#10-32 UNF	1.00	0.44	0.09	0.75	1.22	3.78	3.78
1-1/16"	5/8-18 UNF	#10-32 UNF	1.25	0.44	0.09	0.88	1.44	4.00	4.16
1-1/2"	3/4-16 UNF	1/4-20 UNC	1.75	0.62	0.09	0.88	1.47	4.38	4.63

800.696.6165 www.comoso.com

Parker Hannifin Corporation
Pneumatic Division
Wadsworth, Ohio
www.parker.com/pneumatics

D

Mounting Style BFN
Front Block Mount, Single Acting, Spring Return

Drawings are representative of cylinders. Certain bore sizes may not look exactly as shown.

Bore Sizes
7/16"

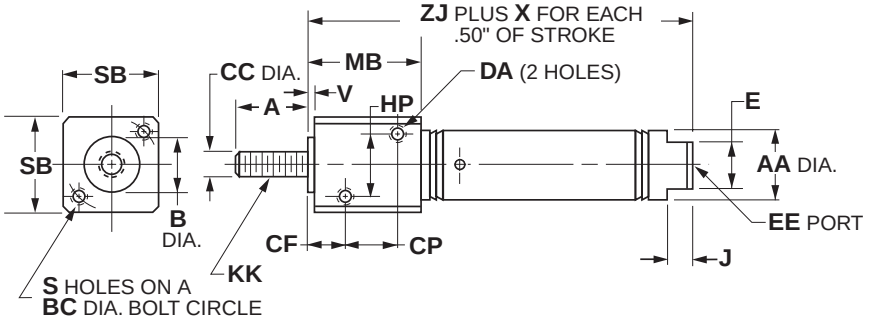

Bore Sizes
3/4"
1-1/16"
1-1/2"

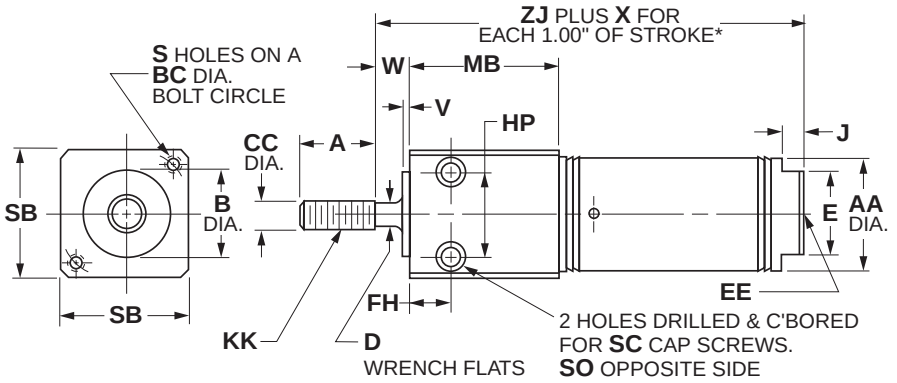

Bore	SR	SRM	Std. Stroke (in)	Max Stroke (in)	SS Rod Std
7/16"	●		1/2, 1, 1-1/2, 2, 3	6	✓
3/4"	●	●	1/2, 1, 2, 3, 4	6	✓
1-1/16"	●	●	1, 2, 3, 4	6	✓
1-1/2"	●	●	1, 2, 3, 4	6	✓

Bore	A	AA	B	BC	CC	CF	CP	D	DA	E	EE	FH
7/16"	0.50	0.50	0.437	0.75	0.188	0.31	0.44	–	#8-32 UNC	0.38	#10-32	0.31
3/4"	0.75	0.81	0.624	1.00	0.250	–	–	0.22	–	0.62	1/8 NPTF	0.38
1-1/16"	0.75	1.12	0.750	1.25	0.312	–	–	0.25	–	0.88	1/8 NPTF	0.62
1-1/2"	1.25	1.56	1.00	1.75	0.437	–	–	0.38	–	0.88	1/4 NPTF	0.88

Bore	HP	J	KK	MB	S	SB	SC	SO	V	W	X	ZJ	
												SR	SRM
7/16"	0.44	0.19	#10-32 UNF	0.88	#8-32 UNC	0.75	–	–	0.062	–	0.94	1.94	–
3/4"	0.62	0.19	1/4-28 UNF	1.12	#10-32 UNF	1.00	#10-32	1/4-20 UNC	0.093	0.34	1.69	2.66	2.91
1-1/16"	0.81	0.19	5/16-24 UNF	1.41	#10-32 UNF	1.25	#10-32	1/4-20 UNC	0.093	0.47	1.81	3.38	3.63
1-1/2"	1.12	0.25	7/16-20 UNF	1.88	1/4 UNC	1.75	1/4-20	5/16-18 UNC	0.125	0.38	2.00	3.69	3.94

* To determine lengths for half inch stroke increments, determine length for next highest whole number stroke and subtract one half inch.

800.696.6165 www.comoso.com

Parker Hannifin Corporation
Pneumatic Division
Wadsworth, Ohio
www.parker.com/pneumatics

Mounting Style BFR
Front Block Mount, Single Acting, Spring Extend

Drawings are representative of cylinders. Certain bore sizes may not look exactly as shown.

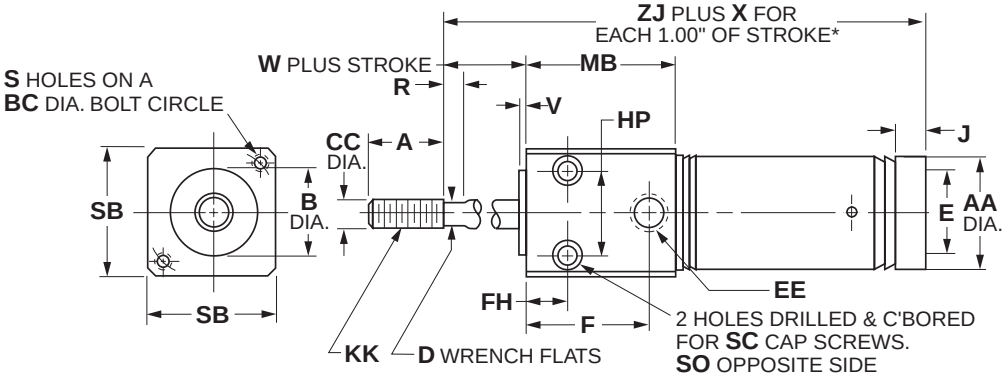

Bore	SR	SRM	Std. Stroke (in)	Max Stroke (in)	SS Rod Std
3/4"	●	●	1, 2, 3, 4	6	✓
1-1/16"	●	●	1, 2, 3, 4	6	✓
1-1/2"	●	●	1, 2, 3, 4	6	✓

Bore	A	AA	B	BC	CC	D	E	EE	F	FH	HP	J
3/4"	0.75	0.81	0.624	1.00	0.250	0.22	–	1/8 NPTF	0.88	0.38	0.62	0.19
1-1/16"	0.75	1.12	0.750	1.25	0.312	0.25	–	1/8 NPTF	1.16	0.62	0.81	–
1-1/2"	1.25	1.56	1.00	1.75	0.437	0.38	0.88	1/4 NPTF	1.53	0.88	1.12	0.25

Bore	KK	MB	R	S	SB	SC	SO	V	W	X	ZJ	
											SR	SRM
3/4"	1/4-28 UNF	1.12	0.25	#10-32 UNF	1.00	#10-32	1/4-20 UNC	0.093	0.34	2.69	2.56	2.81
1-1/16"	5/16-24 UNF	1.41	0.25	#10-32 UNF	1.25	#10-32	1/4-20 UNC	0.093	0.47	2.81	3.12	3.37
1-1/2"	7/16-20 UNF	1.88	0.25	1/4-20 UNC	1.75	1/4-20	5/16-18 UNC	0.125	0.38	3.00	3.69	3.94

* To determine lengths for half inch stroke increments, determine length for next highest whole number stroke and subtract one half inch.

Parker Hannifin Corporation
Pneumatic Division
Wadsworth, Ohio
www.parker.com/pneumatics

800.696.6165 www.comoso.com

D

Mounting Style TRN
Rear Trunnion Mount, Single Acting, Spring Return

Drawings are representative of cylinders. Certain bore sizes may not look exactly as shown.

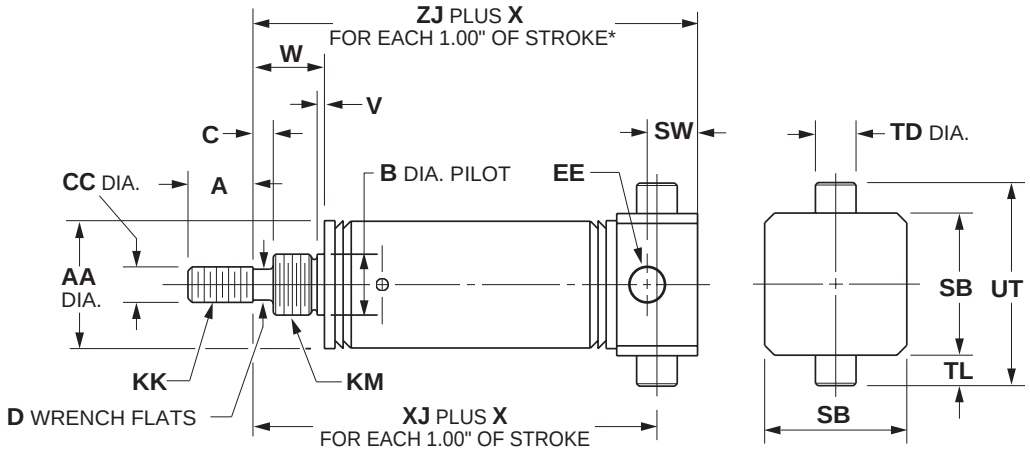

Bore	SR	SRM	Std. Stroke (in)	Max Stroke (in)	SS Rod Std
7/16"	●		1/2, 1, 2, 3, 4	6	✓
3/4"	●	●	1, 2, 3, 4	6	✓
1-1/16"	●	●	1, 2, 3, 4	6	✓
1-1/2"	●	●	1, 2, 3, 4	6	✓

Bore	A	AA	B	C	CC	D	EE	KK	KM
7/16"	0.50	0.50	0.374	–	0.188	–	#10-32	#10-32 UNF	3/8-24 UNF
3/4"	0.75	0.81	0.499	0.25	0.250	0.22	1/8 NPTF	1/4-28 UNF	1/2-20 UNF
1-1/16"	0.75	1.12	0.624	0.38	0.312	0.25	1/8 NPTF	5/16-24 UNF	5/8-18 UNF
1-1/2"	1.25	1.56	0.749	0.25	0.437	0.38	1/4 NPTF	7/16-20 UNF	3/4-16 UNF

Bore	SB	SW	TD	TL	UT	V	W	X	XJ		ZJ	
									SR	SRM	SR	SRM
7/16"	0.75	0.38	0.374	0.50	1.25	0.05	0.32	0.94**	1.38	–	1.62	–
3/4"	1.00	0.44	0.500	0.38	1.75	0.09	0.62	1.69	1.94	2.19	2.31	2.56
1-1/16"	1.25	0.44	0.500	0.38	2.00	0.09	0.88	1.81	2.44	2.69	2.81	3.06
1-1/2"	1.75	0.62	0.500	0.38	2.50	0.09	0.88	2.00	2.56	2.81	3.06	3.31

* To determine lengths for half inch stroke increments, determine length for next highest whole number stroke and subtract one half inch.

** For each 0.50" of stroke.

800.696.6165 www.comoso.com

Parker Hannifin Corporation
Pneumatic Division
Wadsworth, Ohio
www.parker.com/pneumatics

Mounting Style TRR
Rear Trunnion Mount, Single Acting, Spring Extend

Drawings are representative of cylinders. Certain bore sizes may not look exactly as shown.

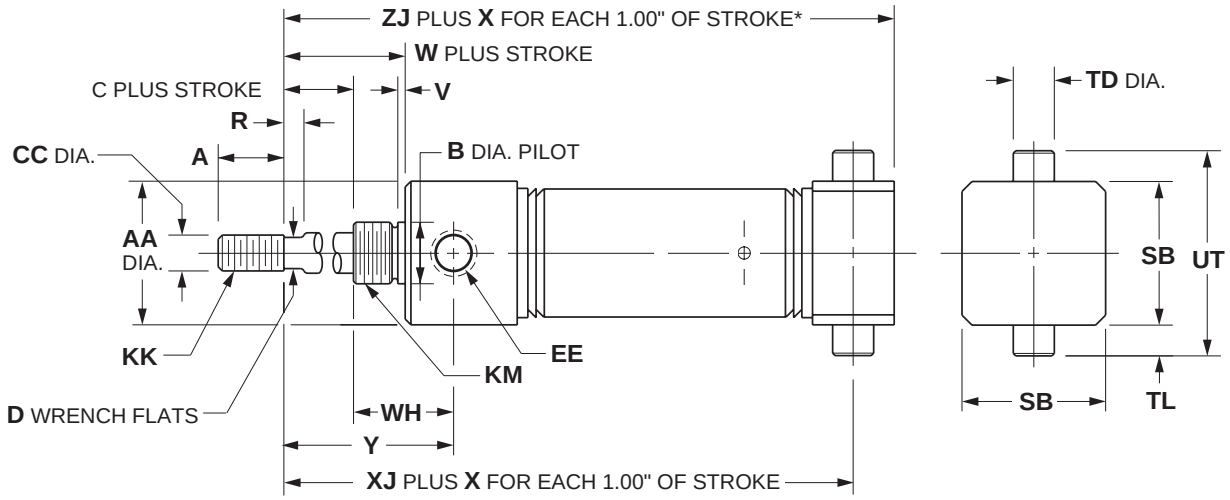

Bore	SR	SRM	Std. Stroke (in)	Max Stroke (in)	SS Rod Std
3/4"	●	●	1, 2, 3, 4	6	✓
1-1/16"	●	●	1, 2, 3, 4	6	✓
1-1/2"	●	●	1, 2, 3, 4	6	✓

Bore	A	AA	B	C	CC	D	EE	KK	KM
3/4"	0.75	0.86	0.624	0.25	0.250	0.22	1/8 NPTF	1/4-28 UNF	1/2-20 UNF
1-1/16"	0.75	1.12	0.624	0.38	0.312	0.25	1/8 NPTF	5/16-24 UNF	5/8-18 UNF
1-1/2"	1.25	1.56	0.749	0.25	0.437	0.38	1/4 NPTF	7/16-20 UNF	3/4-16 UNF

Bore	R	SB	TD	TL	UT	V	W	WH	X	XJ		ZJ	
										SR	SRM	SR	SRM
3/4"	0.25	1.00	0.500	0.38	1.75	0.09	0.75	0.72	2.69	2.85	3.10	3.22	3.47
1-1/16"	0.25	1.25	0.500	0.38	2.00	0.09	0.88	0.68	2.81	3.15	3.40	3.53	3.78
1-1/2"	0.25	1.75	0.500	0.38	2.50	0.09	0.88	1.25	3.00	3.38	3.63	3.88	4.13

* To determine lengths for half inch stroke increments, determine length for next highest whole number stroke and subtract one half inch.

800.696.6165 www.comoso.com

Parker Hannifin Corporation
Pneumatic Division
Wadsworth, Ohio
www.parker.com/pneumatics

D

Mounting Style TFD
Front Trunnion Mount, Double Acting

Drawings are representative of cylinders. Certain bore sizes may not look exactly as shown.

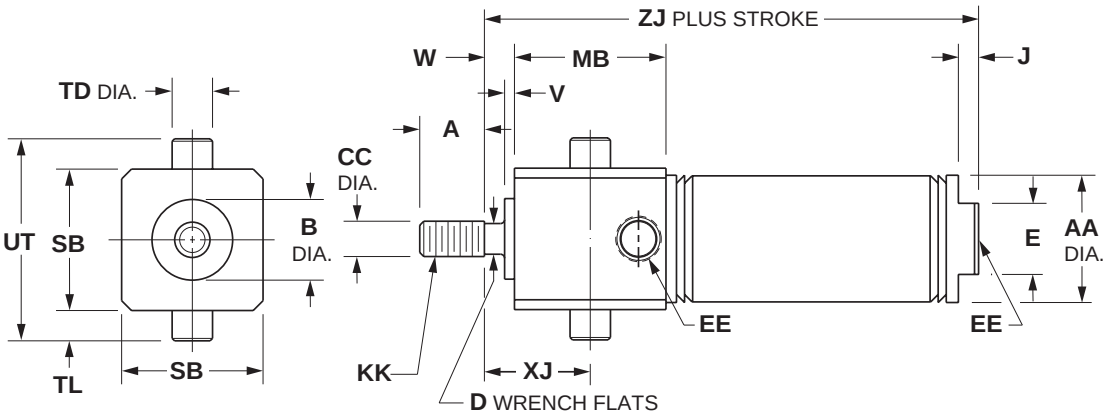

Bore	SR	SRM	Std. Stroke (in)	Max Stroke (in)	SS Rod Std
7/16"	●		1/2, 1, 1-1/2, 2, 3, 4	12	✓
3/4"	●	●	1, 2, 3, 4, 5, 6	12	✓
1-1/16"	●	●	1, 2, 3, 4, 5, 6	12	✓
1-1/2"	●	●	1, 2, 3, 4, 5, 6	12	✓

Bore	A	AA	B	CC	D	E	EE	J	KK
7/16"	0.50	0.50	0.437	0.188	–	0.38	#10-32	0.19	#10-32 UNF
3/4"	0.75	0.81	0.624	0.250	0.22	0.62	1/8 NPTF	0.19	1/4-28 UNF
1-1/16"	0.75	1.12	0.750	0.312	0.25	0.88	1/8 NPTF	0.19	5/16-24 UNF
1-1/2"	1.25	1.56	1.000	0.437	0.38	0.88	1/4 NPTF	0.25	7/16-20 UNF

Bore	MB	SB	TD	TL	UT	V	W	XJ	ZJ	
									SR	SRM
7/16"	0.88	0.75	0.374	0.250	1.25	0.062	–	0.31	2.12	–
3/4"	1.12	1.00	0.500	0.38	1.75	0.093	0.34	0.69	3.22	3.22
1-1/16"	1.41	1.25	0.500	0.38	2.00	0.093	0.47	1.09	3.75	3.91
1-1/2"	1.88	1.75	0.500	0.38	2.50	0.125	0.38	1.31	4.19	4.44

800.696.6165 www.comoso.com

Parker Hannifin Corporation
Pneumatic Division
Wadsworth, Ohio
www.parker.com/pneumatics

Mounting Style TRD
Rear Trunnion Mount, Double Acting

Drawings are representative of cylinders. Certain bore sizes may not look exactly as shown.

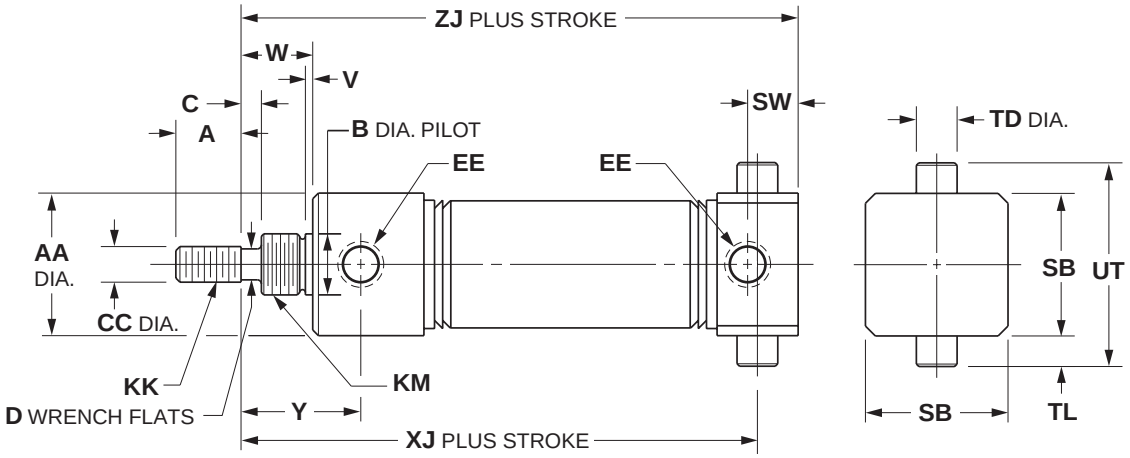

Bore	SR	SRM	Std. Stroke (in)	Max Stroke (in)	SS Rod Std
7/16"	●		1/2, 1, 1-1/2, 2, 3, 4	12	✓
3/4"	●	●	1, 2, 3, 4, 5, 6	12	✓
1-1/16"	●	●	1, 2, 3, 4	12	✓
1-1/2"	●	●	1, 2, 3, 4, 5, 6	12	✓

Bore	A	AA	B	C	CC	D	EE	KK	KM
7/16"	0.50	0.74	0.437	–	0.188	–	#10-32	#10-32 UNF	7/16-20 UNF
3/4"	0.75	0.86	0.624	0.25	0.250	0.22	1/8 NPTF	1/4-28 UNF	5/8-18 UNF
1-1/16"	0.75	1.12	0.624	0.38	0.312	0.25	1/8 NPTF	5/16-24 UNF	5/8-18 UNF
1-1/2"	1.25	1.56	0.749	0.25	0.437	0.38	1/4 NPTF	7/16-20 UNF	3/4-16 UNF

Bore	SB	SW	TD	TL	UT	V	W	XJ		Y	ZJ	
								SR	SRM		SR	SRM
7/16"	0.75	0.38	0.374	0.25	1.25	0.05	0.38	2.19	–	0.72	2.44	–
3/4"	1.00	0.44	0.500	0.38	1.75	0.09	0.75	3.41	3.41	1.22	3.78	3.78
1-1/16"	1.25	0.44	0.500	0.38	2.00	0.09	0.88	3.62	3.62	1.44	4.00	4.16
1-1/2"	1.75	0.62	0.500	0.38	2.50	0.09	0.88	3.88	4.13	1.47	4.38	4.63

800.696.6165
www.comoso.com

Parker Hannifin Corporation
Pneumatic Division
Wadsworth, Ohio
www.parker.com/pneumatics

D

Mounting Style TFN
Front Trunnion Mount, Single Acting, Spring Return

Drawings are representative of cylinders. Certain bore sizes may not look exactly as shown.

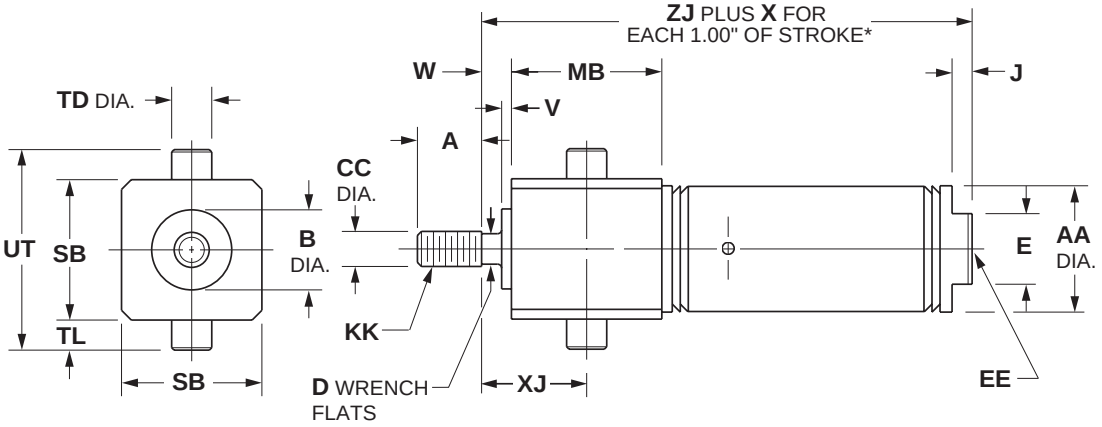

Bore	SR	SRM	Std. Stroke (in)	Max Stroke (in)	SS Rod Std
7/16"	●		1/2, 1, 1-1/2, 2, 3	6	✓
3/4"	●	●	1/2, 1, 2, 3, 4	6	✓
1-1/16"	●	●	1, 2, 3, 4	6	✓
1-1/2"	●	●	1, 2, 3, 4	6	✓

Bore	A	AA	B	CC	D	E	EE	J	KK
7/16"	0.50	0.50	0.437	0.188	–	0.38	#10-32	0.19	#10-32 UNF
3/4"	0.75	0.81	0.624	0.250	0.22	0.62	1/8 NPTF	0.19	1/4-28 UNF
1-1/16"	0.75	1.12	0.750	0.312	0.25	0.88	1/8 NPTF	0.19	5/16-24 UNF
1-1/2"	1.25	1.56	1.000	0.437	0.38	0.88	1/4 NPTF	0.25	7/16-20 UNF

Bore	MB	SB	TD	TL	UT	V	W	X	XJ	ZJ	
										SR	SRM
7/16"	0.88	0.75	0.374	0.25	1.25	0.062	0	0.94**	0.31	1.94	–
3/4"	1.12	1.00	0.500	0.38	1.75	0.093	0.34	1.69	0.69	2.66	2.91
1-1/16"	1.41	1.25	0.500	0.38	2.00	0.093	0.47	1.81	1.09	3.38	3.63
1-1/2"	1.88	1.75	0.500	0.38	2.50	0.125	0.38	2.00	1.31	3.69	3.94

* To determine lengths for half inch stroke increments, determine length for next highest whole number stroke and subtract one half inch.

** For each 0.50" of stroke

800.696.6165 www.comoso.com

Parker Hannifin Corporation
Pneumatic Division
Wadsworth, Ohio
www.parker.com/pneumatics

Mounting Style TFR
Front Trunnion Mount, Single Acting, Spring Extend

Drawings are representative of cylinders. Certain bore sizes may not look exactly as shown.

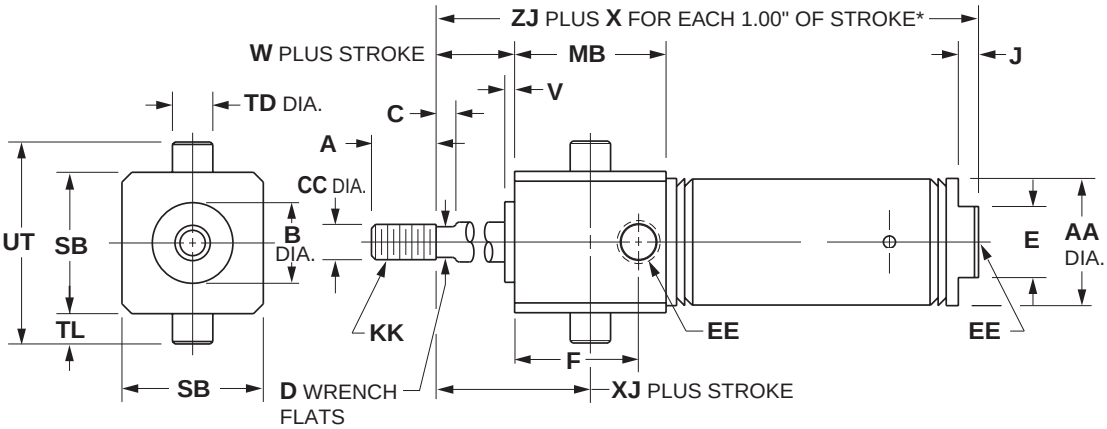

Bore	SR	SRM	Std. Stroke (in)	Max Stroke (in)	SS Rod Std
3/4"	●	●	1, 2, 3, 4	6	✓
1-1/16"	●	●	1, 2, 3, 4	6	✓
1-1/2"	●	●	1, 2, 3, 4	6	✓

Bore	A	AA	B	C	CC	D	E	F	EE	J
3/4"	0.75	0.81	0.624	0.25	0.250	0.22	0	0.88	1/8 NPTF	–
1-1/16"	0.75	1.12	0.750	0.25	0.312	0.25	0	1.16	1/8 NPTF	–
1-1/2"	1.25	1.56	1.000	0.25	0.437	0.38	0.88	–	1/4 NPTF	0.25

Bore	KK	MB	SB	TD	TL	UT	V	W	X	XJ	ZJ	
											SR	SRM
3/4"	1/4-28 UNF	1.12	1.00	0.500	0.38	1.75	0.093	0.34	2.69	0.69	2.56	2.81
1-1/16"	5/16-24 UNF	1.41	1.25	0.500	0.38	2.00	0.093	0.47	2.81	1.09	3.12	3.37
1-1/2"	7/16-20 UNF	1.88	1.75	0.500	0.38	2.50	0.125	0.38	3.00	1.31	3.69	3.94

* To determine lengths for half inch stroke increments, determine length for next highest whole number stroke and subtract one half inch.

800.696.6165 www.comoso.com

Parker Hannifin Corporation
Pneumatic Division
Wadsworth, Ohio
www.parker.com/pneumatics

D

Air Reservoirs

Air Reservoirs installed can significantly reduce the pulsation of a system. In addition air reservoirs can be used as a means to store energy. Caution should always be used when storing energy. Air reservoirs if installed in the correct location and sized correctly can temporarily increase the flow of an actuator or cylinder.
As always never exceed the rated pressure of the cylinder.

How To Order SR Series Air Reservoirs

.75 — **AR** — **SR** — **2.00**

Bore Size*	
.75	3/4"
1.06	1-1/16"
1.50	1-1/2"
2.00	2"
2.50	2-1/2"
3.00	3"

Mounting	
AR	Air Reservoir

Length
Specify in inches.
See table below.

Bore	Standard Lengths	Max Length	Volume (in³)
3/4"	1" increments to 4"	32"	0.39 plus 0.44 per inch length
1-1/16"	1" increments to 8"	32"	0.99 plus 0.89 per inch length
1-1/2"	1" increments to 16"	32"	1.91 plus 1.77 per inch length
2"	1" increments to 16"	32"	4.22 plus 3.14 per inch length
2-1/2"	1" increments to 16"	32"	7.04 plus 4.91 per inch length
3"	1" increments to 16"	32"	9.90 plus 7.07 per inch length

Dimensions

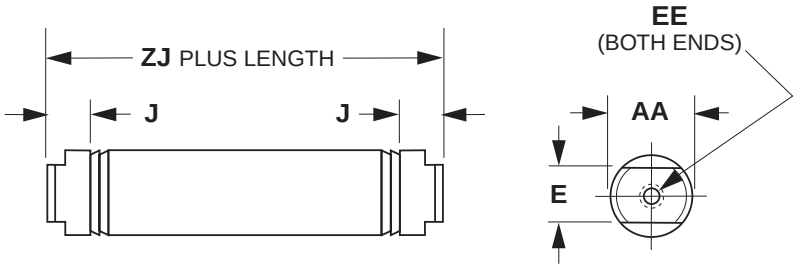

Bore	AA	E	EE	J	ZJ
3/4"	0.813	0.625	1/8" NPTF	0.19	1.938
1-1/16"	1.125	0.88	1/8" NPTF	0.19	2.375
1-1/2"	1.56	0.88	1/8" NPTF	0.250	2.250
2"	2.08	1.25	1/4" NPTF	0.312	2.875
2-1/2"	2.62	1.75	1/4" NPTF	0.312	2.875
3"	3.16	2.00	3/8" NPTF	0.312	3.190

Parker Hannifin Corporation
Pneumatic Division
Wadsworth, Ohio
www.parker.com/pneumatics

800.696.6165 www.comoso.com

Bumpers

Bumpers are available at extra cost except where noted as standard. Add the following dimensions to the overall cylinder length by bore

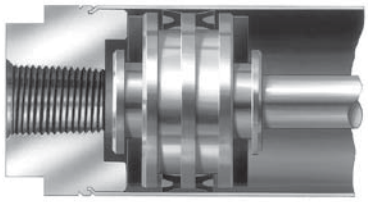

SR Bumper Adder

Cylinder Type	SR Series Bore Size											
	5/16"	7/16"	9/16"	3/4"	7/8"	1-1/16"	1-1/4"	1-1/2"	1-3/4"	2"	2-1/2"	3"
Spring Return	*	0.062"	0.062"	0.125"	*	0.125"	*	**	*	0.125"	N/A	N/A
Spring Extend	*	0.125"	0.062"	0.125"	*	0.125"	*	**	*	0.125"	N/A	N/A
Double Acting	*	0.188"	0.125"	**	*	0.125"	*	0.125"	*	0.250"	0.250"	N/A
K-type	N/A	0.250"	0.125"	**	*	0.500"	*	0.125"	*	0.250"	0.250"	N/A

*Bumpers are furnished as standard and do not affect overall length. **Bumpers do not affect overall length.

SRM Bumper Adder

Cylinder Type	SRM Series Bore Size							
	9/16"	3/4"	1-1/16"	1-1/4"	1-1/2"	1-3/4"	2"	2-1/2"
Spring Return	0.062"	0.125"	0.125"	0.125"	0.125"	*	0.125"	N/A
Spring Extend	0.062"	0.125"	0.125"	0.125"	0.125"	*	0.125"	N/A
Double Acting	0.125"	0.250"	0.250"	0.250"	0.250"	*	0.250"	0.250"
K-type	0.125"	0.312"	0.250"	0.250"	0.250"	*	0.250"	0.250"

Fluorocarbon Seals

Available on all bore sizes at extra cost. Not available on SRM or SRDM series.

Stainless Steel Piston Rods

Corrosion resistant stainless steel is the standard piston rod material for all bore sizes up to and including 1-1/2 inch bore at no additional cost. The only exception to the stainless steel standard is when a hollow rod, KDXH option is specified. Stainless steel is also the standard material on block, trunnion, hex/non-rotating and KDX mounts. Stainless steel is available on other sizes for an additional charge.

Rod Wiper

SR/SRM Series cylinders can be fitted with a rod wiper that is specially designed to prevent contaminants from clinging to the piston rod and damaging the piston rod seal. Available in 3/4", 1-1/16", and 1-1/2" bores, the piston rod wiper can be added to the SR/SRM and SRD/SRDM series.

800.696.6165 www.comoso.com

Parker Hannifin Corporation
Pneumatic Division
Wadsworth, Ohio
www.parker.com/pneumatics

C086

D

Adjustable Cushion Option

Cushions can be selected on nine bore sizes, ranging from 0.75" bore to 3.0" bore with mounting styles D, front nose mount, and DXP, rear pivot mount. Adjustable cushions are not available with double rod SR Series cylinders.

Cushion Adjusting Needle Valves

The fine-thread cushion needle valves make precise adjustment quick and easy. The needle valve is fully captured to allow for safe cushion adjustment while cylinder is pressurized. The brass needle valves are corrosion resistant. The standard position for needle valve adjustments is position 1, 90° from the port. See port location table for SR Series Cylinders.

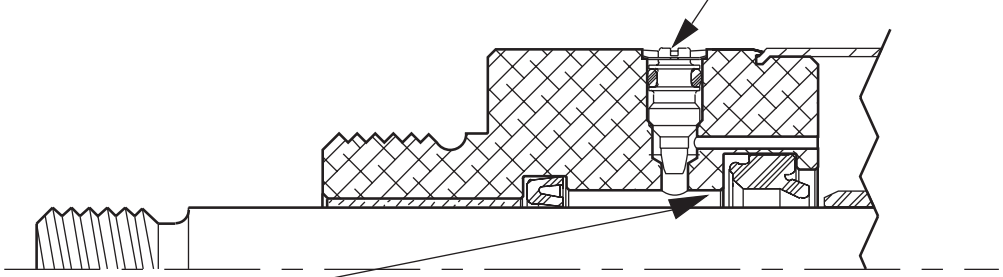

Check Seal Cushion

The "Check Seal" system offers excellent cushioning efficiency and long cushion seal life. This seal is specifically designed for cushion applications and has a long proven history in our products. Extensive side by side testing of the check seal in SR Series cylinders significantly outlasted and outperformed competitors' o-ring shaped seals.

The Check Seal's unique geometry exhibits the dynamic sealing capabilities of a lipseal. As the cushion sleeve enters the Check Seal at the end of stroke, the Check Seal blocks the air from exhausting directly through the port and forces the air through the adjustable needle valve orifice. The exhaust airflow is precisely metered to control the desired rate of deceleration of the cylinder piston.

During stroke reversal, the check valve action of the Check Seal induces a fast out-of-cushion response. The Check Seal floats forward in the retainer groove as the cushion sleeve exits the Cushion Seal, thereby creating a path for maximum air flow around the Check Seal to access the piston face. The quick response of the Check Seal design yields faster cycle times and increased productivity.

Critical Mounting Dimensions for SR Series and SRM Cylinders with Adjustable Cushions

In most cases, cylinder mounting dimensions are not affected when cushions are specified. Standard catalog dimensions apply when cushions are specified at either end of a DXP mount and when specified at the head end only of a D mount. **The only exception to standard catalog dimensions is when a cushion is specified on the cap end or both ends of a D mount**. Please consult Table A for the critical mounting dimensions on D mount SR and SRM cylinders with cushions both ends or cushions cap end only.

Table B shows the cushion lengths for SR and SRM cylinders.

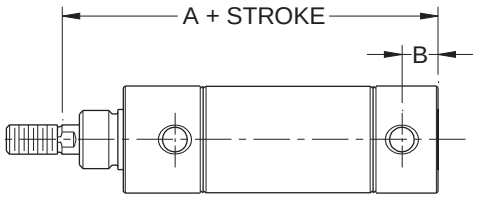

D Mount

Table A:
Critical Mounting Dimensions for D Mount SR and SRM Cylinders with Cushions Both Ends or Cushions Cap End Only.

Bore Size	SR Dimensions		SRM Dimensions	
	A + Stroke	B	A + Stroke	B
.75	3.40	0.28	3.40	0.28
.88	3.25	0.28	N/A	N/A
1.06	3.49	0.28	3.65	0.28
1.25	4.31	0.38	4.34	0.38
1.50	4.12	0.31	4.37	0.31
1.75	5.25	0.42	5.25	0.42
2.00	5.06	0.47	5.34	0.47
2.50	5.06	0.47	5.06	0.47
3.00	5.69	0.53	N/A	N/A

Table B:
Cushion Lengths for SR and SRM Cylinders.

Bore Size	Head	Cap
.75	0.750	0.625
.88	0.750	0.625
1.06	0.750	06.25
1.25	0.750	0.625
1.50	0.750	0.625
1.75	0.875	0.625
2.00	0.875	0.750
2.50	0.875	0.750
3.00	0.875	1.000

800.696.6165 www.comoso.com

Parker Hannifin Corporation
Pneumatic Division
Wadsworth, Ohio
www.parker.com/pneumatics

Piston Rod Clevis

Assembly includes pin and
(2) Retainer Rings
and (1) Jam Nut.

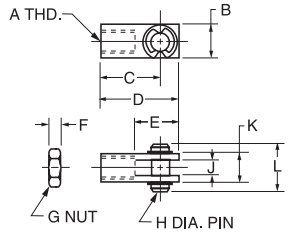

C086

Part Number	Bore	A	B	C	D	E	F	G	H	J	K	L
L071300025	5/16	#5-40	.31	.44	.56	.38	.11	#5-40	.12	.13	.31	.50
L071300100 L077130100*	7/16, 9/16	#10-32	.38	.75	.94	.56	.12	#10-32	.19	.19	.38	.56
L071300200 L077130200*	3/4, 7/8	1/4-28	.50	.94	1.19	.68	.16	1/4-28	.25	.25	.50	.69
L071300300 L077130300*	1-1/16	5/16-24	.50	.94	1.19	.68	.19	5/16-24	.25	.25	.50	.69
L071300400 L077130400*	1-1/4, 1-1/2	7/16-20	.75	1.31	1.69	.94	.25	7/16-20	.38	.38	.75	1.03
L071300500 L077130500*	1-3/4, 2, 2-1/2	1/2-20	.75	1.31	1.69	.94	.31	1/2-20	.38	.38	.75	1.03
L071300600	3	5/8-18	1.00	2.25	2.75	1.50	.38	5/8-18	.50	.50	1.00	1.38

* Stainless Steel for use with SRD/SRDM cylinders.

Pivot Brackets

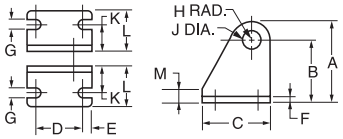

Part Number	Bore	A	B	C	D	E	F	G	H	J	K	L	M
L071310100	7/16	.76	.56	.75	.50	.12	.06	.19	.20	.160	.28	.50	.12
L071310200	3/4, 7/8, 1-1/16	1.19	.88	1.12	.75	.19	.12	.27	.31	.255	.44	.81	.25
L071310300	1-1/2	1.75	1.38	1.50	1.00	.25	.12	.27	.38	.380	.62	1.00	.25

Pivot Bracket Assembly

Assembly includes pin and
(2) Retainer Rings.

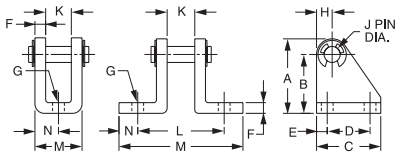

5/16" Bore Only

Part Number	Bore	A	B	C	D	E	F	G	H	J	K	L	M	N
L071320025	5/16	.53	.40	.62	.38	.12	.04	16	.12	.12	.26	–	.36	.18
L071320100 L077150100*	7/16, 9/16	.76	.56	.75	.50	.12	.06	.19	.19	.156	.34	.91	1.34	.22
L071320200 L077150200*	3/4, 7/8, 1-1/16	1.18	.88	1.12	.75	.19	.12	.27	.30	.250	.38	1.25	2.00	.38
L071320300	1-1/4	1.18	.88	1.12	.75	.19	.12	27	.30	.250	.50	1.38	2.14	.38
L071320400 L077150400*	1-1/2, 1-3/4	1.75	1.38	1.50	1.00	.25	.25	.27	.37	.375	.62	2.00	2.88	.44
L071320500 L077150500*	2, 2-1/2	1.75	1.38	1.50	1.00	.25	.25	.27	.37	.375	.75	2.12	3.00	.44
L071320600	3	2.25	1.75	1.75	1.25	.25	.25	.27	50	.50	.88	2.62	3.88	.62

* Stainless Steel for use with SRD/SRDM cylinders.

SR Series Trunnion Brackets

Select brackets for SR Series Trunnion Mount Cylinders from the table below.
(Note: Trunnion Brackets are ordered as a separate item from the cylinder.)

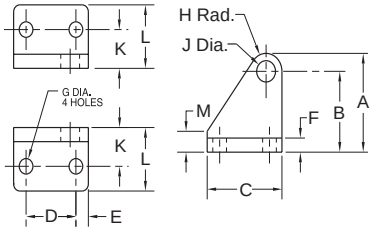

Part Number	Bore Sizes	A	B	C	D	E	F	G	H	J	K	L	M
L076600100	7/16	1.75	1.38	1.50	1	.25	.25	.27	.38	.375	.69	1.12	.37
L076600200	3/4, 11/16, 1-1/2	1.75	1.38	1.50	1	.25	.25	.27	.38	.500	.69	1.12	.37

800.696.6165 www.comoso.com

Parker Hannifin Corporation
Pneumatic Division
Wadsworth, Ohio
www.parker.com/pneumatics

C086

Foot Brackets

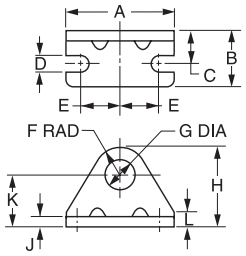

Part Number	Bore	A	B	C	D	E	F	G	H	J	K	L
L073790016	5/16	1.00	.37	.25	.13	.37	.31	.25	.75	.06	.44	.12
L073790023	5/16	1.00	.37	.25	.13	.37	.31	.38	.75	.06	.44	.12
L073790024	7/16	1.38	.62	.31	.19	.50	.31	.38	.88	.07	.56	.12
L073790028 **L077160028***	7/16, 9/16	1.38	.62	.38	.19	.50	.38	.44	.94	.09	.56	.12
L073790032	3/4	1.62	.75	.44	.19	.62	.41	.50	1.09	.10	.69	.19
L073790040 **L077160040***	3/4, 7/8, 1-1/16	1.88	1.00	.56	.27	.75	.56	.63	1.38	.12	.81	.25
L073790048 **L077160048***	1-1/4, 1-1/2	2.50	1.50	.75	.27	.94	.75	.75	1.75	.12	1.00	.38
L073790102	1-3/4	3.00	1.50	.87	.35	1.12	.91	1.03	2.16	.19	1.25	.50
L073790124 **L077160124***	2	3.12	1.62	1.00	.34	1.12	1.00	1.38	2.50	.25	1.50	.62
L073790132	2-1/2	3.75	1.62	1.00	.35	1.44	1.25	1.51	3.00	.25	1.75	.75
L073790140	3	4.37	1.62	1.00	.35	1.75	1.25	1.64	3.14	.25	1.89	.89

* Stainless Steel for use with SRD/SRDM cylinders.

D

Mounting Nut

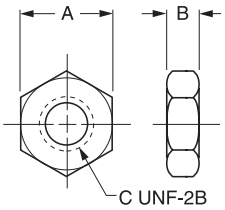

Part Number	Bore	A	B	C
L073800200	5/16	.44	.16	1/4-28
L073800400	5/16, 7/16	.56	.22	3/8-24
L073800500 **L077170500***	7/16, 9/16	.69	.25	7/16-20
L073800600	3/4	.75	.31	1/2-20
L073800800 **L077170800***	3/4, 7/8, 1-1/16	.94	.38	5/8-18
L073800900 **L077170900***	1-1/4, 1-1/2	1.12	.42	3/4-16
L073801100	1-3/4	1.50	.55	1-14
L073801200 **L077171200***	2	1.88	.50	1-1/4-12
L073801400	2-1/2	2.06	.78	1-3/8-12
L073801500	3	2.25	.84	1-1/2-12

* Stainless Steel for use with SRD/SRDM cylinders.

Parker Hannifin Corporation
Pneumatic Division
Wadsworth, Ohio
www.parker.com/pneumatics

800.696.6165 www.comoso.com