PDB Profile, PTFE Modular Back-up

PDB back-ups are PTFE anti-extrusion rings. The PDBA and PDBB pro les are designed to retro t MIL Spec grooves used in commercial applications. PDBA styles are split rings retro tting MS28774 designs, while PDBB styles are solid rings retro tting MS27595 designs. Due to the fact that these pro les are designed to commercial grooves, MIL Spec certi cations are not available. Although the standard material is virgin PTFE, any of Parker's available PTFE blends can be used.

Technical Data

Standard

Materials*	**Temperature**	**Max. Pressure Range**
0100 Virgin PTFE	-425°F to 450°F (-254°C to 232°C)	1,500 psi (103 bar) dynamic 4,500 psi (310 bar) static

***Alternate Materials:** For applications that may require an alternate material, please see Section 3 (Table 3-7) for alternate PTFE materials.

PDB Cross-Section

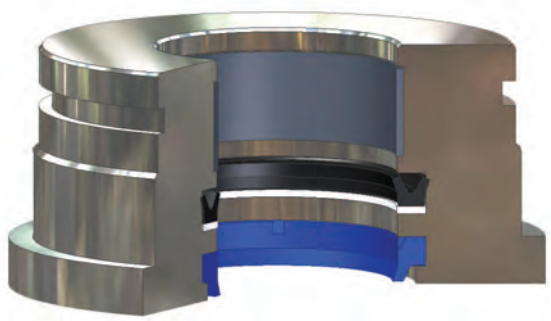

PDB installed in Rod Gland

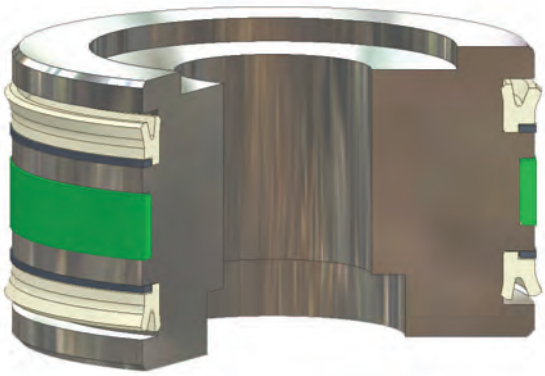

PDB installed in Piston Gland

Part Number Nomenclature — PDBA Profile

Table 10-9. PDBA Profile — Inch

0	1	0	0	PDBA	1	2	4
Seal Compound 4-Digit Material Code Example: 0100 = Virgin PTFE				Pro le	MS28774 Dash Code Example: 124 = 1.270" I.D.		

Gland Dimensions — PDBA Profile

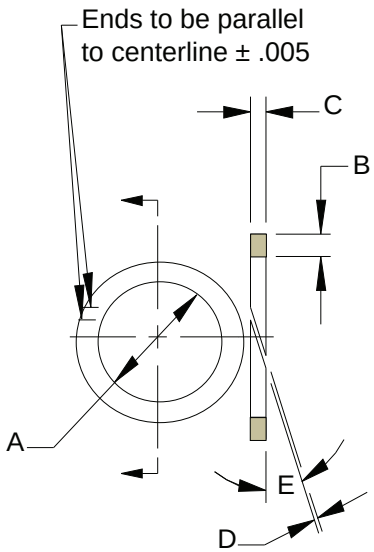

Please refer to Engineering Section 2, page 2-8 for surface finish and additional hardware considerations.

Table 10-10. PDBA Gland Dimensions — Inch

Dash Number MS28774	Seal Dimensions				
	A Inside Diameter	B Radial Cross-Section	C Width	D Split Gap	E Split Angle Degree
	+.001/ -.001				
004	0.109	.052/.054	.045/.052	.000/.005	39
005	0.124	.052/.054	.045/.052	.000/.005	33
006	0.140	.052/.054	.045/.052	.000/.005	30
007	0.171	.052/.054	.045/.052	.000/.005	26
008	0.202	.052/.054	.045/.052	.000/.005	22
009	0.234	.052/.054	.045/.052	.000/.005	22
010	0.265	.052/.054	.045/.052	.000/.005	22
011	0.327	.052/.054	.045/.052	.000/.005	22
012	0.390	.052/.054	.045/.052	.000/.005	22
013	0.455	.052/.054	.045/.052	.000/.005	22
014	0.518	.052/.054	.045/.052	.000/.005	22
015	0.580	.052/.054	.045/.052	.000/.005	22
016	0.643	.052/.054	.045/.052	.000/.005	22
017	0.705	.052/.054	.045/.052	.000/.005	22
018	0.768	.052/.054	.045/.052	.000/.005	22
019	0.830	.052/.054	.045/.052	.000/.005	22
020	0.898	.052/.054	.045/.052	.000/.005	22
021	0.960	.052/.054	.045/.052	.000/.005	22

NOTE: Measure Split Gap using a Mandrel with "A" Diameter.

Dash Number MS28774	Seal Dimensions				
	A Inside Diameter	B Radial Cross-Section	C Width	D Split Gap	E Split Angle Degree
	+.001/ -.001				
022	1.023	.052/.054	.045/.052	.000/.005	22
023	1.085	.052/.054	.045/.052	.000/.005	22
024	1.148	.052/.054	.045/.052	.000/.005	22
025	1.210	.052/.054	.045/.052	.000/.005	22
026	1.273	.052/.054	.045/.052	.000/.005	22
027	1.335	.052/.054	.045/.052	.000/.005	22
028	1.398	.052/.054	.045/.052	.000/.005	22
110	0.390	.085/.087	.045/.052	.000/.006	22
111	0.452	.085/.087	.045/.052	.000/.006	22
112	0.515	.085/.087	.045/.052	.000/.006	22
113	0.577	.085/.087	.045/.052	.000/.006	22
114	0.640	.085/.087	.045/.052	.000/.006	22
115	0.702	.085/.087	.045/.052	.000/.006	22
116	0.765	.085/.087	.045/.052	.000/.006	22
117	0.832	.085/.087	.045/.052	.000/.006	22
118	0.895	.085/.087	.045/.052	.000/.006	22
119	0.957	.085/.087	.045/.052	.000/.006	22
120	1.020	.085/.087	.045/.052	.000/.006	22

NOTE: Measure Split Gap using a Mandrel with "A" Diameter.

Parker Hannifin Corporation
Engineered Polymer Systems Division
Phone: 801 972 3000

Table 10-10. PDBA Gland Dimensions — Inch (Continued)

Dash Number MS28774	Seal Dimensions				
	A Inside Diameter	B Radial Cross-Section	C Width	D Split Gap	E Split Angle Degree
	+.001/ -.001				
121	1.082	.085/.087	.045/.052	.000/.006	22
122	1.145	.085/.087	.045/.052	.000/.006	22
123	1.207	.085/.087	.045/.052	.000/.006	22
124	1.270	.085/.087	.045/.052	.000/.006	22
125	1.332	.085/.087	.045/.052	.000/.006	22
126	1.397	.085/.087	.045/.052	.000/.006	22
127	1.459	.085/.087	.045/.052	.000/.006	22
128	1.522	.085/.087	.045/.052	.000/.006	22
129	1.584	.085/.087	.045/.052	.000/.006	22
130	1.647	.085/.087	.045/.052	.000/.006	22
131	1.709	.085/.087	.045/.052	.000/.006	22
132	1.772	.085/.087	.045/.052	.000/.006	22
133	1.934	.085/.087	.045/.052	.000/.006	22
134	1.897	.085/.087	.045/.052	.000/.006	22
135	1.959	.085/.087	.045/.052	.000/.006	22
136	2.022	.085/.087	.045/.052	.000/.006	22
137	2.084	.085/.087	.045/.052	.000/.006	22
138	2.147	.085/.087	.045/.052	.000/.006	22
139	2.209	.085/.087	.045/.052	.000/.006	22
140	2.258	.085/.087	.045/.052	.000/.006	22
141	2.320	.085/.087	.045/.052	.000/.006	22
142	2.383	.085/.087	.045/.052	.000/.006	22
143	2.445	.085/.087	.045/.052	.000/.006	22
144	2.508	.085/.087	.045/.052	.000/.006	22
145	2.570	.085/.087	.045/.052	.000/.006	22
146	2.633	.085/.087	.045/.052	.000/.006	22
147	2.695	.085/.087	.045/.052	.000/.006	22
148	2.758	.085/.087	.045/.052	.000/.006	22
149	2.820	.085/.087	.045/.052	.000/.006	22
210	0.766	.118/.120	.045/.052	.000/.006	22
211	0.828	.118/.120	.045/.052	.000/.006	22
212	0.891	.118/.120	.045/.052	.000/.006	22
213	0.953	.118/.120	.045/.052	.000/.006	22
214	1.016	.118/.120	.045/.052	.000/.006	22
215	1.078	.118/.120	.045/.052	.000/.006	22
216	1.141	.118/.120	.045/.052	.000/.006	22
217	1.203	.118/.120	.045/.052	.000/.006	22
218	1.266	.118/.120	.045/.052	.000/.006	22
219	1.344	.118/.120	.045/.052	.000/.006	22
220	1.397	.118/.120	.045/.052	.000/.006	22
221	1.459	.118/.120	.045/.052	.000/.006	22
222	1.522	.118/.120	.045/.052	.000/.006	22
223	1.647	.118/.120	.045/.052	.000/.007	22
224	1.772	.118/.120	.045/.052	.000/.007	22
225	1.897	.118/.120	.045/.052	.000/.007	22
226	2.022	.118/.120	.045/.052	.000/.007	22

NOTE: Measure Split Gap using a Mandrel with "A" Diameter.

Dash Number MS28774	Seal Dimensions				
	A Inside Diameter	B Radial Cross-Section	C Width	D Split Gap	E Split Angle Degree
	+.001/ -.001				
227	2.147	.118/.120	.045/.052	.000/.007	22
228	2.272	.118/.120	.045/.052	.000/.007	22
229	2.397	.118/.120	.045/.052	.000/.007	22
230	2.522	.118/.120	.045/.052	.000/.007	22
231	2.631	.118/.120	.045/.052	.000/.007	22
232	2.756	.118/.120	.045/.052	.000/.007	22
233	2.881	.118/.120	.045/.052	.000/.007	22
234	3.006	.118/.120	.045/.052	.000/.007	22
235	3.131	.118/.120	.045/.052	.000/.007	22
236	3.256	.118/.120	.045/.052	.000/.007	22
237	3.381	.118/.120	.045/.052	.000/.007	22
238	3.506	.118/.120	.045/.052	.000/.007	22
239	3.631	.118/.120	.045/.052	.000/.007	22
240	3.756	.118/.120	.045/.052	.000/.007	22
241	3.881	.118/.120	.045/.052	.000/.007	22
242	4.006	.118/.120	.045/.052	.000/.007	22
243	4.131	.118/.120	.045/.052	.000/.007	22
244	4.256	.118/.120	.045/.052	.000/.007	22
245	4.381	.118/.120	.045/.052	.000/.007	22
246	4.506	.118/.120	.045/.052	.000/.007	22
247	4.631	.118/.120	.045/.052	.000/.007	22
325	1.513	.182/.184	.065/.075	.000/.007	22
326	1.638	.182/.184	.065/.075	.000/.007	22
327	1.763	.182/.184	.065/.075	.000/.007	22
328	1.888	.182/.184	.065/.075	.000/.007	22
329	2.013	.182/.184	.065/.075	.000/.007	22
330	2.138	.182/.184	.065/.075	.000/.007	22
331	2.268	.182/.184	.065/.075	.000/.007	22
332	2.393	.182/.184	.065/.075	.000/.007	22
333	2.518	.182/.184	.065/.075	.000/.007	22
334	2.643	.182/.184	.065/.075	.000/.007	22
335	2.768	.182/.184	.065/.075	.000/.007	22
336	2.893	.182/.184	.065/.075	.000/.007	22
337	3.018	.182/.184	.065/.075	.000/.007	22
338	3.143	.182/.184	.065/.075	.000/.007	22
339	3.273	.182/.184	.065/.075	.000/.007	22
340	3.398	.182/.184	.065/.075	.000/.007	22
341	3.523	.182/.184	.065/.075	.000/.007	22
342	3.648	.182/.184	.065/.075	.000/.007	22
343	3.773	.182/.184	.065/.075	.000/.007	22
344	3.898	.182/.184	.065/.075	.000/.007	22
345	4.028	.182/.184	.065/.075	.000/.007	22
346	4.153	.182/.184	.065/.075	.000/.007	22
347	4.278	.182/.184	.065/.075	.000/.007	22
348	4.403	.182/.184	.065/.075	.000/.007	22
349	4.528	.182/.184	.065/.075	.000/.007	22

NOTE: Measure Split Gap using a Mandrel with "A" Diameter.

Parker Hannifin Corporation
Engineered Polymer Systems Division
Phone: 801 972 3000

Table 10-10. PDBA Gland Dimensions — Inch (Continued)

Dash Number MS28774	Seal Dimensions				
	A Inside Diameter	B Radial Cross-Section	C Width	D Split Gap	E Split Angle Degree
	+.001/ -.001				
425	4.551	.235/.237	.106/.110	.000/.008	22
426	4.676	.235/.237	.106/.110	.000/.008	22
427	4.801	.235/.237	.106/.110	.000/.008	22
428	4.926	.235/.237	.106/.110	.000/.008	22
429	5.051	.235/.237	.106/.110	.000/.008	22
430	5.176	.235/.237	.106/.110	.000/.008	22
431	5.301	.235/.237	.106/.110	.000/.008	22
432	5.426	.235/.237	.106/.110	.000/.008	22
433	5.551	.235/.237	.106/.110	.000/.008	22
434	5.676	.235/.237	.106/.110	.000/.008	22
435	5.801	.235/.237	.106/.110	.000/.008	22
436	5.926	.235/.237	.106/.110	.000/.008	22
437	6.051	.235/.237	.106/.110	.000/.008	22
438	6.274	.235/.237	.106/.110	.000/.008	22
439	6.524	.235/.237	.106/.110	.000/.008	22
440	6.774	.235/.237	.106/.110	.000/.008	22
441	7.024	.235/.237	.106/.110	.000/.008	22
442	7.274	.235/.237	.106/.110	.000/.008	22

NOTE: Measure Split Gap using a Mandrel with "A" Diameter.

Dash Number MS28774	Seal Dimensions				
	A Inside Diameter	B Radial Cross-Section	C Width	D Split Gap	E Split Angle Degree
	+.001/ -.001				
443	7.524	.235/.237	.106/.110	.000/.008	22
444	7.774	.235/.237	.106/.110	.000/.008	22
445	8.024	.235/.237	.106/.110	.000/.008	22
446	8.524	.235/.237	.106/.110	.000/.008	22
447	9.024	.235/.237	.106/.110	.000/.008	22
448	9.524	.235/.237	.106/.110	.000/.008	22
449	10.024	.235/.237	.106/.110	.000/.008	22
450	10.524	.235/.237	.106/.110	.000/.008	22
451	11.024	.235/.237	.106/.110	.000/.008	22
452	11.524	.235/.237	.106/.110	.000/.008	22
453	12.024	.235/.237	.106/.110	.000/.008	22
454	12.524	.235/.237	.106/.110	.000/.008	22
455	13.024	.235/.237	.106/.110	.000/.008	22
456	13.524	.235/.237	.106/.110	.000/.008	22
457	14.024	.235/.237	.106/.110	.000/.008	22
458	14.524	.235/.237	.106/.110	.000/.008	22
459	15.024	.235/.237	.106/.110	.000/.008	22
460	15.524	.235/.237	.106/.110	.000/.008	22

NOTE: Measure Split Gap using a Mandrel with "A" Diameter.

NOTE: For sizes larger than those shown in the table, please contact your local Parker Seal representative.

Parker Hannifin Corporation
Engineered Polymer Systems Division
Phone: 801 972 3000

Part Number Nomenclature — PDBB Profile

Table 10-11. PDBB Profile — Inch

0	1	0	0	PDBB	2	3	2
Seal Compound 4-Digit Material Code Example: 100 = Virgin PTFE				Pro le	MS27595 Dash Code Example: 232 = 2.756" I.D.		

Gland Dimensions — PDBB Profile

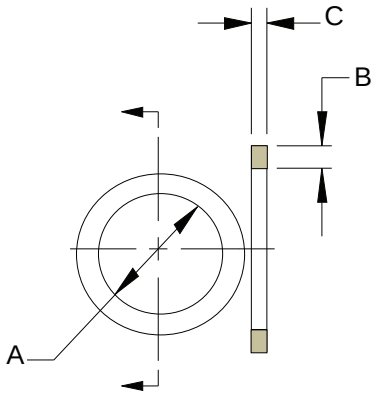

Please refer to Engineering Section 2, page 2-8 for surface finish and additional hardware considerations.

Table 10-12. PDBB Gland Dimensions — Inch

Dash Number MS27595	Seal Dimensions		
	A I.D.	B Radial Cross-Section	C Width
	+.001/ -.000		
004	0.080	.048/.052	.054/.056
005	0.111	.048/.052	.054/.056
006	0.125	.048/.052	.054/.056
007	0.156	.048/.052	.054/.056
008	0.187	.048/.052	.054/.056
009	0.219	.048/.052	.054/.056
010	0.250	.048/.052	.054/.056
011	0.312	.048/.052	.054/.056
012	0.375	.048/.052	.054/.056
013	0.440	.048/.052	.054/.056
014	0.503	.048/.052	.054/.056
015	0.565	.048/.052	.054/.056
016	0.628	.048/.052	.054/.056
017	0.690	.048/.052	.054/.056
018	0.753	.048/.052	.054/.056
019	0.815	.048/.052	.054/.056
020	0.881	.048/.052	.054/.056
	+.002/ -.002		
021	0.943	.048/.052	.054/.056
022	1.006	.048/.052	.054/.056
023	1.068	.048/.052	.054/.056
024	1.131	.048/.052	.054/.056
025	1.193	.048/.052	.054/.056

Dash Number MS27595	Seal Dimensions		
	A I.D.	B Radial Cross-Section	C Width
	+.002/ -.002		
026	1.256	.048/.052	.054/.056
027	1.318	.048/.052	.054/.056
028	1.381	.048/.052	.054/.056
	+.001/ -.002		
110	0.374	.048/.052	.087/.089
111	0.437	.048/.052	.087/.089
112	0.499	.048/.052	.087/.089
113	0.562	.048/.052	.087/.089
114	0.624	.048/.052	.087/.089
115	0.687	.048/.052	.087/.089
116	0.749	.048/.052	.087/.089
117	0.815	.048/.052	.087/.089
118	0.877	.048/.052	.087/.089
119	0.940	.048/.052	.087/.089
120	1.002	.048/.052	.087/.089
	+.002/ -.002		
121	1.065	.048/.052	.087/.089
122	1.127	.048/.052	.087/.089
123	1.190	.048/.052	.087/.089
124	1.252	.048/.052	.087/.089
125	1.315	.048/.052	.087/.089
126	1.377	.048/.052	.087/.089

Dash Number MS27595	Seal Dimensions		
	A I.D.	B Radial Cross-Section	C Width
	+.002/ -.002		
127	1.440	.048/.052	.087/.089
128	1.502	.048/.052	.087/.089
129	1.565	.048/.052	.087/.089
130	1.629	.048/.052	.087/.089
131	1.691	.048/.052	.087/.089
132	1.754	.048/.052	.087/.089
133	1.816	.048/.052	.087/.089
134	1.879	.048/.052	.087/.089
135	1.942	.048/.052	.087/.089
136	2.004	.048/.052	.087/.089
137	2.067	.048/.052	.087/.089
138	2.129	.048/.052	.087/.089
139	2.192	.048/.052	.087/.089
140	2.254	.048/.052	.087/.089
141	2.317	.048/.052	.087/.089
142	2.379	.048/.052	.087/.089
143	2.442	.048/.052	.087/.089
144	2.504	.048/.052	.087/.089
145	2.567	.048/.052	.087/.089
146	2.629	.048/.052	.087/.089
147	2.692	.048/.052	.087/.089
148	2.754	.048/.052	.087/.089
149	2.817	.048/.052	.087/.089

Parker Hannifin Corporation
Engineered Polymer Systems Division
Phone: 801 972 3000

Table 10-12. PDBB Gland Dimensions — Inch (Continued)

Dash Number MS27595	Seal Dimensions		
	A I.D.	B Radial Cross-Section	C Width
	+.001/ -.002		
210	0.753	.048/.052	.118/.120
211	0.815	.048/.052	.118/.120
212	0.878	.048/.052	.118/.120
213	0.940	.048/.052	.118/.120
214	1.003	.048/.052	.118/.120
215	1.065	.048/.052	.118/.120
216	1.128	.048/.052	.118/.120
217	1.190	.048/.052	.118/.120
218	1.253	.048/.052	.118/.120
219	1.315	.048/.052	.118/.120
220	1.378	.048/.052	.118/.120
221	1.440	.048/.052	.118/.120
222	1.503	.048/.052	.118/.120
223	1.629	.048/.052	.118/.120
224	1.754	.048/.052	.118/.120
225	1.880	.048/.052	.118/.120
226	2.005	.048/.052	.118/.120
227	2.130	.048/.052	.118/.120
228	2.255	.048/.052	.118/.120
229	2.380	.048/.052	.118/.120
230	2.505	.048/.052	.118/.120
231	2.630	.048/.052	.118/.120
232	2.755	.048/.052	.118/.120
233	2.880	.048/.052	.118/.120
234	3.005	.048/.052	.118/.120
235	3.130	.048/.052	.118/.120
236	3.255	.048/.052	.118/.120
237	3.380	.048/.052	.118/.120
238	3.505	.048/.052	.118/.120
239	3.630	.048/.052	.118/.120
240	3.755	.048/.052	.118/.120
241	3.880	.048/.052	.118/.120
242	4.005	.048/.052	.118/.120
243	4.130	.048/.052	.118/.120
244	4.255	.048/.052	.118/.120
245	4.380	.048/.052	.118/.120

Dash Number MS27595	Seal Dimensions		
	A I.D.	B Radial Cross-Section	C Width
	+.001/ -.002		
246	4.505	.048/.052	.118/.120
247	4.630	.048/.052	.118/.120
325	1.497	.071/.075	.184/.186
326	1.622	.071/.075	.184/.186
327	1.748	.071/.075	.184/.186
328	1.873	.071/.075	.184/.186
329	1.998	.071/.075	.184/.186
330	2.123	.071/.075	.184/.186
331	2.248	.071/.075	.184/.186
332	2.373	.071/.075	.184/.186
333	2.498	.071/.075	.184/.186
334	2.623	.071/.075	.184/.186
335	2.748	.071/.075	.184/.186
336	2.873	.071/.075	.184/.186
337	2.998	.071/.075	.184/.186
338	3.123	.071/.075	.184/.186
339	3.248	.071/.075	.184/.186
340	3.373	.071/.075	.184/.186
341	3.498	.071/.075	.184/.186
342	3.623	.071/.075	.184/.186
343	3.748	.071/.075	.184/.186
344	3.873	.071/.075	.184/.186
345	3.998	.071/.075	.184/.186
346	4.123	.071/.075	.184/.186
347	4.248	.071/.075	.184/.186
348	4.373	.071/.075	.184/.186
349	4.498	.071/.075	.184/.186
	+.002/ -.000		
425	4.502	.106/.110	.235/.237
426	4.627	.106/.110	.235/.237
427	4.752	.106/.110	.235/.237
428	4.877	.106/.110	.235/.237
429	5.002	.106/.110	.235/.237
430	5.127	.106/.110	.235/.237
431	5.252	.106/.110	.235/.237

Dash Number MS27595	Seal Dimensions		
	A I.D.	B Radial Cross-Section	C Width
	+.002/ -.000		
432	5.377	.106/.110	.235/.237
433	5.502	.106/.110	.235/.237
434	5.627	.106/.110	.235/.237
435	5.752	.106/.110	.235/.237
436	5.877	.106/.110	.235/.237
437	6.002	.106/.110	.235/.237
438	6.252	.106/.110	.235/.237
439	6.502	.106/.110	.235/.237
440	6.752	.106/.110	.235/.237
441	7.002	.106/.110	.235/.237
442	7.252	.106/.110	.235/.237
443	7.502	.106/.110	.235/.237
444	7.752	.106/.110	.235/.237
445	8.002	.106/.110	.235/.237
	+.003/ -.003		
446	8.502	.106/.110	.235/.237
447	9.002	.106/.110	.235/.237
448	9.502	.106/.110	.235/.237
449	10.002	.106/.110	.235/.237
450	10.502	.106/.110	.235/.237
	+.004/ -.004		
451	11.002	.106/.110	.235/.237
452	11.502	.106/.110	.235/.237
453	12.002	.106/.110	.235/.237
454	12.502	.106/.110	.235/.237
455	13.002	.106/.110	.235/.237
	+.005/ -.005		
456	13.502	.106/.110	.235/.237
457	14.002	.106/.110	.235/.237
458	14.502	.106/.110	.235/.237
459	15.002	.106/.110	.235/.237
460	15.502	.106/.110	.235/.237

NOTE: For sizes larger than those shown in the table, please contact your local Parker Seal representative.

Parker Hannifin Corporation
Engineered Polymer Systems Division
Phone: 801 972 3000

Notes

Parker Hannifin Corporation
Engineered Polymer Systems Division
Phone: 801 972 3000