HYDRAULICS GROUP PRODUCT INFORMATION FORM

Subject : Replacement and Mounting Kits Frame Size 4-Series PVplus-UK

Owner	Created By	Date of Issue	Document Number	Issue Number
Stefan Schindler/COR/PARKER	Stefan Schindler/COR/PARKER	11/07/2002	SSCR-5FNJ22	1.0

Division	Product Category:	Product Line:	Type of Doc:
Hydraulic Controls Division	Piston and Vane Pumps	Pvplus	Spare Parts Lists

Changes in this document are :	

Main Body

This document contains the following information:

- Exploded view Frame Size 4
- Seal Kits "SK"
- Replacement Kits "RK"
- Mounting Kits "MK"
- all design changes

PVI-BG4-GB-42-sw.pdf PVI-BG4-GB-41-sw.pdf PVI-BG4-GB-40-sw.pdf

PVI-BG4-DE-42-sw.pdf PVI-BG4-DE-41-sw.pdf PVI-BG4-DE-40-sw.pdf

www.comoso.com

Exploded view, PV, frame size 4, PV140 - PV180

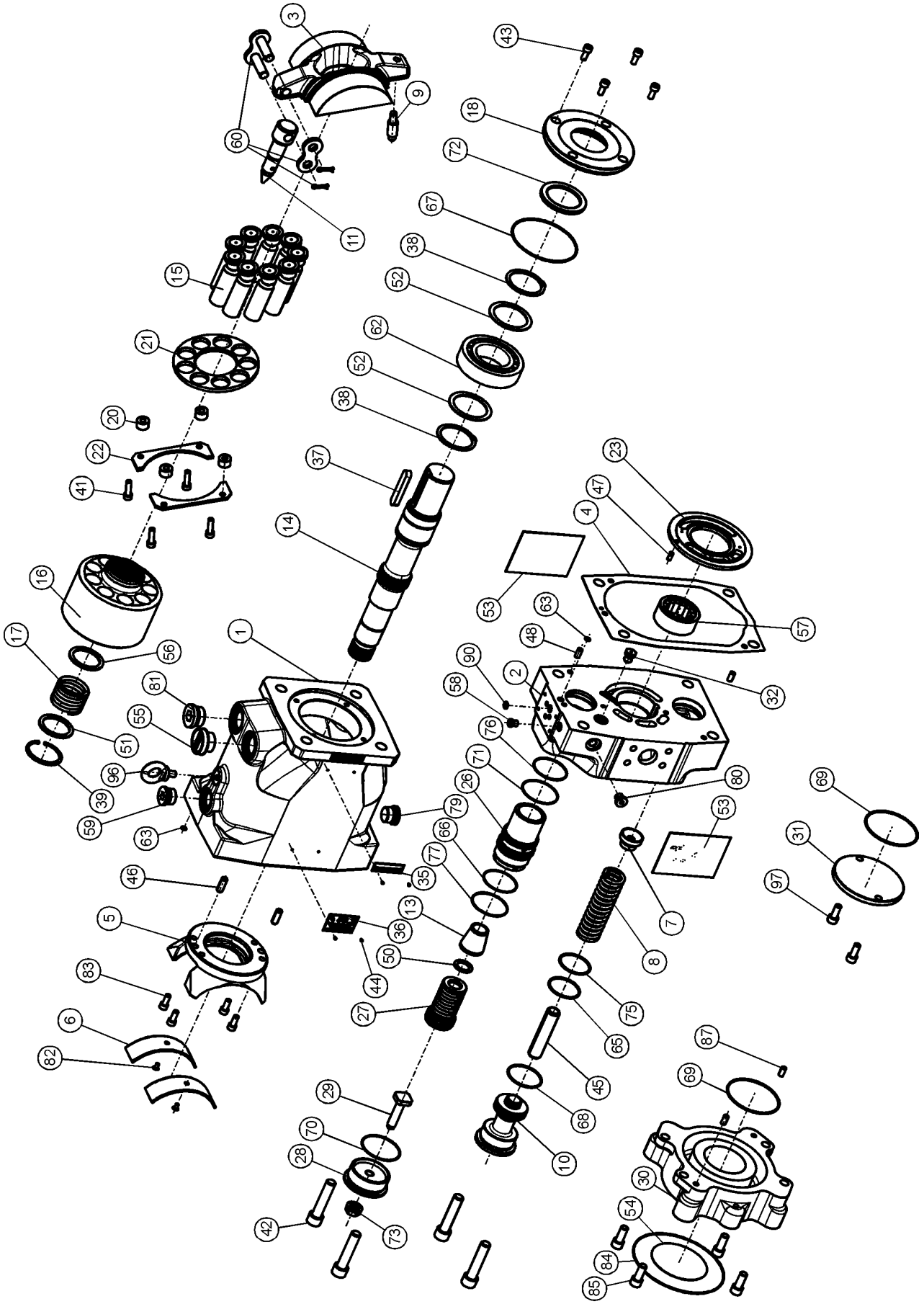

correlation between position numbers and replacement kits

pos. No.	description	page	replacement kit
1, 2	pump body, end cover	-	-
3	swash plate, finished	6	swashplate kit
4	body seal	4	seal kit
5	cradle	-	-
6	trunnion bearing, HX	6	trunnion bearing kit
7	spring washer, servo spring	8	servo spring kit
8	servo spring	8	servo spring kit
9	connector servo spring	6	swashplate kit
10	servo spring plug	8	servo spring kit
11	swash plate connector	6	swashplate kit
13	tapered / contour sleeve	8	tapered / contour sleeve
14	shaft	7	shaft unit
15	piston and slipper, crimped	6	rotating group, set of pistons
16	cylinder block	6	rotating group
17	retainer spring, cylinder block	6	rotating group
18	pilot cover	-	-
20	distance washer	6	rotating group
21	slipper retainer	6	rotating group
22	retainer segment	6	rotating group
23	valve plate	6	valve plate
26	servo piston sleeve	7	servo piston sleeve
27	servo piston	7	servo piston kit
28	servo piston cover	8	displacement adjuster kit
29	set screw	8	displacement limiter kit
30	thru drive adaptor	10	mounting kit, thru drive
31	thru drive cover	-	-
32	air bleed valve	8	air bleed valve
35, 36	rotation indicator, name plate	-	-
37	key	7	shaft unit
38	snap ring for shaft	7	shaft unit
39	snap ring for bore	6	rotating group
41	hexagon socket head cap screw, retainer	6	rotating group
42	hexagon socket head cap screw, body	6	connecting bolt kit
43	hexagon socket head cap screw, pilot	6	connecting bolt kit
44	rivet	-	-
45	guide pin, servo spring	8	servo spring kit
46	locator pin cradle	-	-
47	locator pin, valve plate	6	valve plate
48	locator pin, body	6	connecting bolt kit
50	washer, servo piston	7	servo piston kit
51, 56	washer, cylinder block	6	rotating group
52	washer, shaft	7	shaft unit
53, 54	magnet cover for ports, thru drive	-	-
55	protection plug, drain port	-	-
57	roller bearing, rear	7	shaft unit
58	plug, compensator interface	4	seal kit
59	plug, feedback	4	seal kit
60	chain link	6	swashplate kit
62	roller bearing, front	7	shaft unit
63 - 71	o-ring	4	seal kit
72	shaft seal	4	seal kit
73	self sealing lock nut	4, 8	seal kit, displacement limiter
75 - 77, 78	backup rings, retainer for shaft seal	4	seal kit
79 - 81	pipe plug	4	seal kit
82	hexagon socket countersunk head cap screw	6	trunnion bearing kit
83	hexagon socket head cap screw, cradle	-	-
84	o-ring	4	seal kit
85	hexagon socket head cap screw, thru drive	10	mounting kit, thru drive
87	locator pin, thru drive adaptor	10	mounting kit, thru drive
90	o-ring	4	seal kit
91	coupling	9	mounting kit, coupling
92	adaptor for keyed shaft	9	mounting kit, coupling

www.comoso.com

Pos.	Qty.	Ordering code	Description	Remark
		SK-	**Seal kit**	
		PVBG4	**PV series, frame size 4, PV140 - PV180**	
		N	**Seals NBR**	
		V	**Seals FPM**	
		E	**Seals EPR**	
		P	**Seals FPM, shaft seal PTFE (for case pressure)**	
		W	**Seals NBR, shaft seal PTFE (for water glycole)**	
		1	**Threads: metric, ports: BSPP**	
		3	**Threads: UNC, ports: UNF**	
		7	**Threads: metric, ports: ISO 6149**	
		8	**Threads: UNC, ports: ISO 6149**	
		42	**Design series 42**	
			includes:	
4	1		body seal, frame size 4	
58	1		pipe plug VSTI-10x1-OR-A3C ISO 6149 NBR	seals NBR
58	(1)		pipe plug VSTI-10x1-OR-A3C ISO 6149 FPM	seals FPM
58	(1)		pipe plug VSTI-10x1-OR-A3C, ISO 6149 EPR	seals EPR
59	1		pipe plug M 27 x 2 ISO 6149, NBR	seals NBR
59	(1)		pipe plug M 27 x 2 ISO 6149, FPM	seals FPM
59	(1)		pipe plug M 27 x 2 ISO 6149, EPR	seals EPR
63	2		o-ring 2-010-N552-90; 6,07 x 1,78	seals NBR
63	(2)		o-ring 2-010-V747-75; 6,07 x 1,78	seals FPM
63	(2)		o-ring 2-010-E540-80; 6,07 x 1,78	seals EPR
65	1		o-ring 2-136-N552-90; 50,47 x 2,62	seals NBR
65	(1)		o-ring 2-136-V747-75; 50,47 x 2,62	seals FPM
65	(1)		o-ring 2-136-E540-80; 50,47 x 2,62	seals EPR
66	1		o-ring 2-036-N552-90; 60,05 x 1,78	seals NBR
66	(1)		o-ring 2-036-V747-75; 60,05 x 1,78	seals FPM
66	(1)		o-ring 2-036-E540-80; 60,05 x 1,78	seals EPR
67	1		o-ring 2-157-N552-90; 113,97 x 2,62	seals NBR
67	(1)		o-ring 2-157-V747-75; 113,97 x 2,62	seals FPM
67	(1)		o-ring 2-157-E540-80; 113,97 x 2,62	seals EPR
68	1		o-ring 2-140-N552-90; 56,82 x 2,62	seals NBR
68	(1)		o-ring 2-140-V747-75; 56,82 x 2,62	seals FPM
68	(1)		o-ring 2-140-E540-80; 56,82 x 2,62	seals EPR
69	1		o-ring 2-153-N552-90; 88,57 x 2,62	seals NBR
69	(1)		o-ring 2-153-V747-75; 88,57 x 2,62	seals FPM
69	(1)		o-ring 2-153-E540-80; 88,57 x 2,62	seals EPR
70	1		o-ring 2-145-N552-90; 64,77 x 2,62	seals NBR
70	(1)		o-ring 2-145-V747-75; 64,77 x 2,62	seals FPM
70	(1)		o-ring 2-145-E540-80; 64,77 x 2,62	seals EPR
71	1		o-ring 2-035-N552-90; 56,87 x 1,78	seals NBR
71	(1)		o-ring 2-035-V747-75; 56,87 x 1,78	seals FPM
71	(1)		o-ring 2-035-E540-80; 56,87 x 1,78	seals EPR
72	1		shaft seal BABSL 0,5 60 x 80 x 7-NBR	seals NBR
72	(1)		shaft seal BABSL 0,5 60 x 80 x 7-FPM	seals FPM
72	(1)		shaft seal PTFE, frame size 4 with EPR o-ring	seals EPR, S
72	(1)		shaft seal PTFE, frame size 4	seals P, W
73	1		self sealing nut M 14 x 1,5; SEAL LOCK	
75	1		back up ring 8-136-N300-90; 51,26 x 2,18	seals NBR
75	(1)		back up ring 8-136-V709-90; 51,26 x 2,18	seals FPM
75	(1)		back up ring 8-136-E652-90; 51,26 x 2,18	seals EPR
76	1		back up ring 8-035-N300-90; 57,61 x 1,35	seals NBR
76	(1)		back up ring 8-035-V709-90; 57,61 x 1,35	seals FPM
76	(1)		back up ring 8-035-E652-90; 57,61 x 1,35	seals EPR
77	1		back up ring 8-036-N300-90; 60,78 x 1,35	seals NBR

Pos.	Qty.	Ordering code	Description	Remark
77	(1)		back up ring 8-036-V709-90; 60,78 x 1,35	seals FPM
77	(1)		back up ring 8-036-E652-90; 60,78 x 1,35	seals EPR
78	1		J82 x 2,5 DIN 472, retainer for shaft seal	
79	1		pipe plug VSTI R3/4" ED NBR	NBR, thread 1
79	(1)		pipe plug VSTI R3/4" ED FPM	FPM, thread 1
79	(1)		pipe plug VSTI R3/4" ED EPR	EPR, thread 1
79	(1)		pipe plug 12HP50NS-NBR, 1 1/16-12 UNF	NBR, thread 3
79	(1)		pipe plug 12HP50NS-FPM, 1 1/16-12 UNF	FPM, thread 3
79	(1)		pipe plug 12HP50NS-EPR, 1 1/16-12 UNF	EPR, thread 3
79	(1)		pipe plug VSTI-27 x 2-OR-A3C ISO 6149 NBR	NBR, thread 7, 8
79	(1)		pipe plug VSTI-27 x 2-OR-A3C ISO 6149 FPM	FPM, thread 7, 8
79	(1)		pipe plug VSTI-27 x 2-OR-A3C ISO 6149 EPR	EPR, thread 7, 8
80	1		pipe plug VSTI R1/4" ED NBR	NBR, thread 1
80	(1)		pipe plug VSTI R1/4" ED FPM	FPM, thread 1
80	(1)		pipe plug VSTI R1/4" ED EPR	EPR, thread 1
80	(1)		pipe plug 4HP50NS-NBR, 7/16-20 UNF	NBR, thread 3
80	(1)		pipe plug 4HP50NS-FPM, 7/16-20 UNF	FPM, thread 3
80	(1)		pipe plug 4HP50NS-EPR, 7/16-20 UNF	EPR, thread 3
80	(1)		pipe plug VSTI-12 x 1,5-OR-A3C ISO 6149 NBR	NBR, thread 7, 8
80	(1)		pipe plug VSTI-12 x 1,5-OR-A3C ISO 6149 FPM	FPM, thread 7, 8
80	(1)		pipe plug VSTI-12 x 1,5-OR-A3C ISO 6149 EPR	EPR, thread 7, 8
81	1		pipe plug VSTI R1" ED NBR	NBR, thread 1
81	(1)		pipe plug VSTI R1" ED FPM	FPM, thread 1
81	(1)		pipe plug VSTI R1" ED EPR	EPR, thread 1
81	(1)		pipe plug 16HP50NS-NBR, 1 5/16-12 UNF	NBR, thread 3
81	(1)		pipe plug 16HP50NS-FPM, 1 5/16-12 UNF	FPM, thread 3
81	(1)		pipe plug 16HP50NS-EPR, 1 5/16-12 UNF	EPR, thread 3
81	(1)		pipe plug VSTI-33 x 2-OR-A3C ISO 6149 NBR	NBR, thread 7, 8
81	(1)		pipe plug VSTI-33 x 2-OR-A3C ISO 6149 FPM	FPM, thread 7, 8
81	(1)		pipe plug VSTI-33 x 2-OR-A3C ISO 6149 EPR	EPR, thread 7, 8
84	1		o-ring 2-164-N552-90; 158,42 x 2,62	seals NBR
84	(1)		o-ring 2-164-V747-75; 158,42 x 2,62	seals FPM
84	(1)		o-ring 2-164-E540-80; 158,42 x 2,62	seals EPR
84	1		o-ring 2-163-N552-90; 152,07 x 2,62	seals NBR
84	(1)		o-ring 2-163-V747-75; 152,07 x 2,62	seals FPM
84	(1)		o-ring 2-163-E540-80; 152,07 x 2,62	seals EPR
84	1		o-ring 2-048-N552-90; 120,37 x 1,78	seals NBR
84	(1)		o-ring 2-048-V747-75; 120,37 x 1,78	seals FPM
84	(1)		o-ring 2-048-E540-80; 120,37 x 1,78	seals EPR
84	1		o-ring 2-044-N552-90; 94,97 x 1,78	seals NBR
84	(1)		o-ring 2-044-V747-75; 94,97 x 1,78	seals FPM
84	(1)		o-ring 2-044-E540-80; 94,97 x 1,78	seals EPR
84	1		o-ring 2-042-N552-90; 82,27 x 1,78	seals NBR
84	(1)		o-ring 2-042-V747-75; 82,27 x 1,78	seals FPM
84	(1)		o-ring 2-042-E540-80; 82,27 x 1,78	seals EPR
84	1		o-ring 2-041-N552-90; 75,92 x 1,78	seals NBR
84	(1)		o-ring 2-041-V747-75; 75,92 x 1,78	seals FPM
84	(1)		o-ring 2-041-E540-80; 75,92 x 1,78	seals EPR
90	1		o-ring 2-012-N552-90; 9,25 x 1,78	seals NBR
90	(1)		o-ring 2-012-V747-75; 9,25 x 1,78	seals FPM
90	(1)		o-ring 2-012-E540-80; 9,25 x 1,78	seals EPR
261	1		o-ring 6-346-N552-90; 9,4 x 2,1	seals NBR
261	(1)		o-ring 6-346-V747-75; 9,4 x 2,1	seals FPM
261	(1)		o-ring 6-346-E540-80; 9,4 x 2,1	seals EPR

www.comoso.com

Pos.	Qty.	Ordering code	Description	Remark
		RK-	**Replacement kit**	
		PVBG4	**PV series, frame size 4, PV140 - PV180**	
		VT	**Connecting bolt kit**	
		M	**Metric version**	
		S	**SAE/UNC version**	
		40	**Design series 40 - 42**	
			includes:	
42	4		hexagon socket head cap screw M 16 x 75 DIN 912 12.9	thread M
42	(4)		hexagon socket head cap screw 5/8" - 11 UNC x 3", 12.9	thread S
43	4		hexagon socket head cap screw M 8 x 20 DIN 912 12.9	thread M
43	(4)		hexagon socket head cap screw Nr. 5/16" - 18 UNC x 3/4", 12.9	thread S
48	2		roll pin 8 M6 x 16 DIN 7 St 50K	
		RK-	**Replacement kit**	
		PVBG4	**PV series, frame size 4, PV140 - PV180**	
		GLE	**Trunnion bearing unit**	
		40	**Design series 40 - 42**	
			includes:	
6	2		trunnion bearing segment HX, frame size 4	
82	2		hexagon socket countersunk head cap screw M 5 x 10 DIN 7991	
		RK-	**Replacement kit**	
		PVBG4	**PV series, frame size 4, PV140 - PV180**	
		ROG	**Rotating group**	
		40	**Design series 40 - 42**	
			includes:	
15	9		piston and slipper, crimped	
16	1		cylinder block, bimetal	
17	1		retainer spring, cylinder block	
20	4		distance element	
21	1		slipper retainer plate	
22	2		retainer segment	
39	1		snap ring for holes, 60 x 2 DIN 472	
41	4		hexagon socket head cap screw M 8 x 30 DIN 912 12.9, coated	
51	1		washer, SS 48 x 60 x 3 DIN 988	
56	1		washer, 44 x 59 x 3	
		RK-	**Replacement kit**	
		PVBG4	**PV series, frame size 4, PV140 - PV180**	
		KOS	**Piston assembly, set**	
		40	**Design series 40 - 42**	
			includes	
15	9		piston and slipper, crimped	
		RK-	**Replacement kit**	
		PVBG4	**PV series, frame size 4, PV140 - PV180**	
		SS	**Valve plate**	
		R	**Clockwise rotation**	
		L	**Counter-clockwise rotation**	
		40	**Design series 40 - 42**	
			includes:	
23	1		valve plate, clockwise rotation, frame size 4	rotation R
23	(1)		valve plate, counterclockwise rotation, frame size 4	rotation L
47	1		locator pin 6 M6 x 14 DIN 7 St	
		RK-	**Replacement kit**	
		PVBG4	**PV series, frame size 4, PV140 - PV180**	
		SRS	**Swashplate unit**	
		41	**Design series 41**	
			includes:	
3	1		swash plate, finished, frame size 4	
9	1		locator for servo spring, frame size 4	
11	1		swash plate connector frame size 4	
60	1		chain link, 596 - 111 DIN 8187	

Pos.	Qty.	Ordering code	Description	Remark
		RK-	**Replacement kit**	
		PVBG4	**PV series, frame size 4, PV140 - PV180**	
		WP	**Shaft unit, keyed**	
		WZ	**Shaft unit, splined**	
		WQ	**Shaft unit, keyed, heavy duty**	SAE only
		WF	**Shaft unit, splined, heavy duty**	SAE only
		M	**Metric version**	
		S	**SAE/UNC version**	
		40	**Design series 40 - 42**	
			includes:	
14	1		shaft, keyed, metric, frame size 4	keyed, metric
14	(1)		shaft, keyed, SAE, frame size 4, heavy duty	keyed, SAE, heavy d.
14	(1)		shaft, keyed, SAE, frame size 4	keyed, SAE
14	(1)		shaft, splined, metric, frame size 4	splined, metric
14	(1)		shaft, splined, SAE, frame size 4, heavy duty	splined, SAE, heavy
14	(1)		shaft, splined, SAE, frame size 4	splined, SAE
37	1		key, 14 x 9 x 75 DIN 6885 St	keyed, metric
37	(1)		key, 12,7 x 12,7 x 75,5	keyed, SAE, heavy d.
37	(1)		key, 11,1 x 11,1 x 55	keyed, SAE
38	2		Snap ring for shaft, 60 x 2 DIN 471	
52	2		washer, PS 60 x 75 x 2 DIN 988	
57	1		Roller bearing F 204754, INA	
62	1		Roller bearing NUP - 2212 - EC,	
		RK-	**Replacement kit**	
		PV140	**PV series, frame size 4, PV140**	
		PV180	**PV series, frame size 4, PV180**	
		HE	**Stroke limit unit, adjustable**	
		N	**Seals NBR**	
		V	**Seals FPM**	
		E	**Seals EPR**	
		41	**Design series 41 - 42**	
			includes:	
28	1		servo piston cover	
29	1		stroke limiter, M 14 x 1,5, displacement 140 cm³/rev	size 140
29	(1)		stroke limiter, M 14 x 1,5, displacement 180 cm³/rev	size 180
70	1		o-ring 2-145-N552-90; 64,77 x 2,62	seals NBR
70	(1)		o-ring 2-145-V747-75; 64,77 x 2,62	seals FPM
70	(1)		o-ring 2-145-E540-80; 64,77 x 2,62	seals EPR
73	1		self sealing lock nut, M 14 x 1,5; SEAL LOCK	
		RK-	**Replacement kit**	
		PVBG4	**PV series, frame size 4, PV140**	
		SKS	**Servo piston kit**	
		42	**Design series 42**	
			includes:	
27	1		servo piston, frame size 4	
50	4		washer SS 22 x 32 x 2 DIN 988	
		RK-	**Replacement kit**	
		PVBG4	**PV series, frame size 4, PV140 - PV180**	
		RFS	**Servo spring unit**	
		40	**Design series 40 - 42**	
			includes:	
7	1		spring washer, servo spring, frame size 4	
8	1		servo spring, frame size 4	
10	1		servo spring cover, frame size 4	
45	1		Connex LG 22 x 100, roll pin	

www.comoso.com

Pos.	Qty.	Ordering code	Description	Remark
		RK-	**Replacement kit**	
		PVBG4	**PV series, frame size 4, PV140 - PV180**	
		SB	**Servo piston sleeve**	
		N	**Seals NBR**	
		V	**Seals FPM**	
		E	**Seals EPR**	
		42	**Design series 40 - 42**	
			includes:	
26	1		servo piston sleeve, frame size 4	
66	1		o-ring 2-036-N552-90; 60,05 x 1,78	seals NBR
66	(1)		o-ring 2-036-V747-75; 60,05 x 1,78	seals FPM
66	(1)		o-ring 2-036-E540-80; 60,05 x 1,78	seals EPR
71	1		o-ring 2-035-N552-90; 56,87 x 1,78	seals NBR
71	(1)		o-ring 2-035-V747-75; 56,87 x 1,78	seals FPM
71	(1)		o-ring 2-035-E540-80; 56,87 x 1,78	seals EPR
76	1		back up ring 8-035-N300-90; 57,61 x 1,35	seals NBR
76	(1)		back up ring 8-035-V709-90; 57,61 x 1,35	seals FPM
76	(1)		back up ring 8-035-E652-90; 57,61 x 1,35	seals EPR
77	1		back up ring 8-036-N300-90; 60,78 x 1,35	seals NBR
77	(1)		back up ring 8-036-V709-90; 60,78 x 1,35	seals FPM
77	(1)		back up ring 8-036-E652-90; 60,78 x 1,35	seals EPR
32		**RK-**	**Replacement kit**	
		PV000	**PV series, alle frame sizen**	
		EV	**Air bleed valve**	
		N	**Seals NBR**	
		V	**Seals FPM**	
		E	**Seals EPR**	
		40	**Design series 40 - 42**	
			includes:	
260	1		body air bleed valve	
261	1		o-ring 6-346-N552-90; 9,4 x 2,1	seals NBR
261	(1)		o-ring 6-346-V747-75; 9,4 x 2,1	seals FPM
261	(1)		o-ring 6-346-E540-80; 9,4 x 2,1	seals EPR
262	1		spring air bleed valve	
263	1		ball Ø 6,35, tungsten carbide, class G20	
264	1		roll pin, 2 x 10 DIN 1481	
13		**RK-**	**Spare parts kit**	
		PVBG4	**PV series, frame size 2, PV032 - PV046**	
		KH	**Feedback / contour sleeve**	
		0	**Feedback sleeve for standard pumps**	
		K	**Contour sleeve for horse power compensated pumps, 18,5 kW**	
		M	**Contour sleeve for horse power compensated pumps, 22 kW**	
		S	**Contour sleeve for horse power compensated pumps, 30 kW**	
		T	**Contour sleeve for horse power compensated pumps, 37 kW**	
		U	**Contour sleeve for horse power compensated pumps, 45 kW**	
		W	**Contour sleeve for horse power compensated pumps, 55 kW**	
		Y	**Contour sleeve for horse power compensated pumps, 75 kW**	
		Z	**Contour sleeve for horse power compensated pumps, 90 kW**	
		41	**Design series 41 - 42**	
			includes:	
13	1		Feedback sleeve frame size 4	
13	(1)		Contour sleeve frame size 4, 18,5 kW	horse power code K
13	(1)		Contour sleeve frame size 4, 22 kW	horse power code M
13	(1)		Contour sleeve frame size 4, 30 kW	horse power code S
13	(1)		Contour sleeve frame size 4, 37 kW	horse power code T
13	(1)		Contour sleeve frame size 4, 45 kW	horse power code U
13	(1)		Contour sleeve frame size 4, 55 kW	horse power code W
13	(1)		Contour sleeve frame size 4, 75 kW	horse power code Y
13	(1)		Contour sleeve frame size 4, 90 kW	horse power code Z

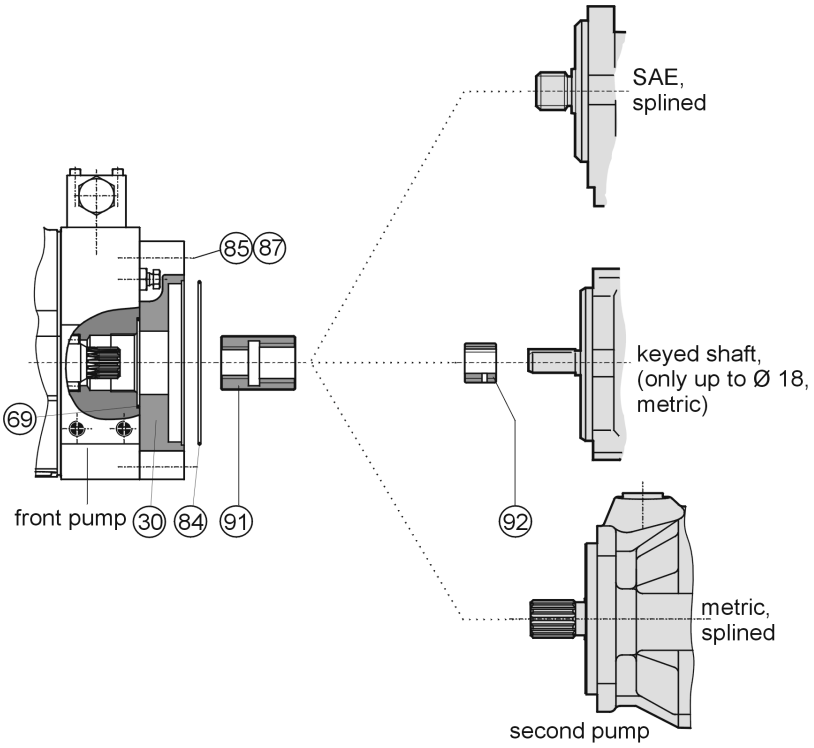

Pos.	Qty	Ordering code	Description	Remark
		MK-	**Mounting kit: coupling for thru drive pump**	
		PVBG4	**PV series , frame size 4, PV140 - PV180**	
		K01	**Second pump: metric splined shaft N25 x 1,5 x 15 DIN 5480**	
		K02	**Second pump: metric splined shaft N32 x 1,5 x 20 DIN 5480**	
		K03	**Second pump: metric splined shaft N40 x 1,5 x 25 DIN 5480**	
		K04	**Second pump: metric splined shaft N50 x 2 x 24 DIN 5480**	
		K11	**Second pump: SAE splined shaft 9T16/32DP flat root side fit**	
		K12	**Second pump: SAE splined shaft 11T16/32DP flat root side fit**	
		K13	**Second pump: SAE splined shaft 13T16/32DP flat root side fit**	
		K14	**Second pump: SAE splined shaft 15T16/32DP flat root side fit**	
		K15	**Second pump: SAE splined shaft 14T12/24DP flat root side fit**	
		K16	**Second pump: SAE splined shaft 17T12/24DP flat root side fit**	
		K17	**Second pump: SAE splined shaft 13T8/16DP flat root side fit**	
		K18	**Second pump: SAE splined shaft 15T8/16DP flat root side fit**	
		K20	**Second pump: metric keyed shaft Ø 12 mm**	
		K21	**Second pump: metric keyed shaft Ø 16 mm**	
		K22	**Second pump: metric keyed shaft Ø 18 mm**	
		40	**Design series 40 - 42**	
			includes:	
91	(1)		coupling, metric, N50 x 2 x 24 DIN 5480	shaft K04
91	(1)		coupling, metric, N40 x 1,5 x 25 DIN 5480	shaft K03
91	(1)		coupling, metric, N32 x 1,5 x 20 DIN 5480	shaft K02, K20, K21, K22
91	(1)		coupling, metric, N25 x 1,5 x 15 DIN 5480	shaft K01
91	(1)		coupling, SAE, 15T8/16DP, flat root, side fit	shaft K18
91	(1)		coupling, SAE, 13T8/16DP, flat root, side fit	shaft K17
91	(1)		coupling, SAE, 17T12/24DP, flat root, side fit	shaft K16
91	(1)		coupling, SAE, 14T12/24DP, flat root, side fit	shaft K15
91	(1)		coupling, SAE, 15T16/32DP, flat root, side fit	shaft K14
91	(1)		coupling, SAE, 13T16/32DP, flat root, side fit	shaft K13
91	(1)		coupling, SAE, 11T16/32DP, flat root, side fit	shaft K12
91	(1)		coupling, SAE, 9T16/32DP, flat root, side fit	shaft K11
92	(1)		adaptor for keyed shaft Ø 18 (also needed: pos 91, shaft K02)	shaft K22
92	(1)		adaptor for keyed shaft Ø 16 (also needed: pos 91, shaft K02)	shaft K21
92	(1)		adaptor for keyed shaft Ø 12 (also needed: pos 91, shaft K02)	shaft K20

www.comoso.com

Pos.	Qty	Ordering code	Description	Remark
		MK-	**Mounting kit: adaptor for thru drive pump**	Screws, washers etc.
		PVBG4	**PV series , frame size 4, PV140 - PV180**	needed to fix the
		A	**For thru drive pump: SAE A, Ø 82,55**	second pump to the
		B	**For thru drive pump: SAE B, Ø 101,6**	adaptor are not
		C	**For thru drive pump: SAE C, Ø 127**	included in the kit
		D	**For thru drive pump: SAE D, Ø 152,4**	
		H	**For thru drive pump: metric Ø 80**	
		J	**For thru drive pump: metric Ø 100**	
		K	**For thru drive pump: metric Ø 125**	
		L	**For thru drive pump: metric Ø 160**	
		M	**Metric screws**	
		S	**UNC screws**	
		N	**Seals NBR**	
		V	**Seals FPM**	
		E	**Seals EPR**	
		40	**Design series 40 - 42**	
			includes:	
30	1		thru drive adaptor SAE A, Ø 82,55, metric screws	interf. A, screws: M
30	(1)		thru drive adaptor SAE A, Ø 82,55, UNC screws	interf. A, screws: S
30	(1)		thru drive adaptor SAE B, Ø 101,6, metric screws	interf. B, screws: M
30	(1)		thru drive adaptor SAE B, Ø 101,6, UNC screws	interf. B, screws: S
30	(1)		thru drive adaptor SAE C, Ø 127, metric screws	interf. C, screws: M
30	(1)		thru drive adaptor SAE C, Ø 127, UNC screws	interf. C, screws: S
30	(1)		thru drive adaptor SAE D, Ø 152,4, metric screws	interf. D, screws: M
30	(1)		thru drive adaptor SAE D, Ø 152,4, UNC screws	interf. D, screws: S
30	(1)		thru drive adaptor: metric Ø 80, metric screws	interf. H, screws: M
30	(1)		thru drive adaptor: metric Ø 80, UNC screws	interf. H, screws: S
30	(1)		thru drive adaptor: metric Ø 100, metric screws	interf. J, screws: M
30	(1)		thru drive adaptor: metric Ø 100, UNC screws	interf. J, screws: S
30	(1)		thru drive adaptor: metric Ø 125, metric screws	interf. K, screws: M
30	(1)		thru drive adaptor: metric Ø 125, UNC screws	interf. K, screws: S
30	(1)		thru drive adaptor: metric Ø 160, metric screws	interf. L, screws: M
30	(1)		thru drive adaptor: metric Ø 160, UNC screws	interf. L, screws: S
31	1		cover plate, thru drive	option T
69	1		o-ring 2-153-N552-90; 88,57 x 2,62	seals NBR
69	(1)		o-ring 2-153-V747-75; 88,57 x 2,62	seals FPM
69	(1)		o-ring 2-153-E540-80; 88,57 x 2,62	seals EPR
84	1		o-ring 2-041-N552-90; 75,92 x 1,78	interf. H, NBR
84	(1)		o-ring 2-041-V747-75; 75,92 x 1,78	interf. H, FPM
84	(1)		o-ring 2-041-E540-80; 75,92 x 1,78	interf. H, EPR
84	1		o-ring 2-042-N552-90; 82,27 x 1,78	interf. A, NBR
84	(1)		o-ring 2-042-V747-75; 82,27 x 1,78	interf. A, FPM
84	(1)		o-ring 2-042-E540-80; 82,27 x 1,78	interf. A, EPR
84	1		o-ring 2-044-N552-90; 94,97 x 1,78	interf. B, J, NBR
84	(1)		o-ring 2-044-V747-75; 94,97 x 1,78	interf. B, J, FPM
84	(1)		o-ring 2-044-E540-80; 94,97 x 1,78	interf. B, J, EPR
84	1		o-ring 2-048-N552-90; 120,37 x 1,78	interf. C, K, NBR
84	(1)		o-ring 2-048-V747-75; 120,37 x 1,78	interf. C, K, FPM
84	(1)		o-ring 2-048-E540-80; 120,37 x 1,78	interf. C, K, EPR
84	(1)		o-ring 2-163-N552-90; 152,07 x 2,62	interf. D, NBR
84	(1)		o-ring 2-163-V747-75; 152,07 x 2,62	interf. D, FPM
84	(1)		o-ring 2-163-E540-80; 152,07 x 2,62	interf. D, EPR
84	(1)		o-ring 2-164-N552-90; 158,42 x 2,62	interf. L, NBR
84	(1)		o-ring 2-164-V747-75; 158,42 x 2,62	interf. L, FPM
84	(1)		o-ring 2-164-E540-80; 158,42 x 2,62	interf. L, EPR
85	4		hexagon socket head cap screw M 12 x 30 DIN 912 12.9	screws: M
85	(4)		hexagon socket head cap screw 1/2" - 13 UNC x 1 1/4", 12.9	screws: S
87	2		locator pin 8 M6 x 16 DIN 7	not for option T
97	2		hexagon socket head cap screw, M10 x 20 DIN 912 12.9	option T, screws: M
97	(2)		hexagon socket head cap screw 3/8" - 16 UNC x 3/4", 12.9	option T, screws: S

www.comoso.com