# PNEUDRI MX

## Product Selection

| | Model | Pipe Size | Flowrates | | | |
|---|---|---|---|---|---|---|
| | | | L/s | $m^3$/min | $m^3$/hr | cfm |
| Single Bank | MX ☐ 102C | 2" | 113 | 6.81 | 408 | 240 |
| | MX ☐ 103C | 2" | 170 | 10.22 | 612 | 360 |
| | MX ☐ 103 | 2" | 213 | 12.78 | 765 | 450 |
| | MX ☐ 104 | 2" | 283 | 17.03 | 1020 | 600 |
| | MX ☐ 105 | 2½" | 354 | 21 | 1275 | 750 |
| | MX ☐ 106 | 2½" | 425 | 26 | 1530 | 900 |
| | MX ☐ 107 | 2½" | 496 | 30 | 1785 | 1050 |
| | MX ☐ 108 | 2½" | 567 | 34 | 2040 | 1200 |
| Multi-Bank | 2 x MX ☐ 105 | 2½" | 708 | 43 | 2550 | 1500 |
| | 2 x MX ☐ 106 | 2½" | 850 | 51 | 3060 | 1800 |
| | 2 x MX ☐ 107 | 2½" | 992 | 60 | 3570 | 2100 |
| | 2 x MX ☐ 108 | 2½" | 1133 | 68 | 4080 | 2400 |
| | 3 x MX ☐ 106 | 2½" | 1275 | 77 | 4590 | 2700 |
| | 3 x MX ☐ 107 | 2½" | 1488 | 89 | 5355 | 3150 |
| | 3 x MX ☐ 108 | G 2½ | 1700 | 102 | 6120 | 3600 |

Stated flows are for operation at 7 bar g (100 psi g) with reference to 20°C, 1 bar a, 0% relative water vapour pressure.
For flows at other pressures apply the correction factors shown.

## Dryer Performance

| Dryer Models | Dewpoint (Standard) | | ISO8573-1:2010 Classification (standard) | Dewpoint (Option 1) | | ISO8573-1:2010 Classification (Option 1) | Dewpoint (Option 2) | | ISO8573-1:2010 Classification (Option 2) |
|---|---|---|---|---|---|---|---|---|---|
| | °C | °F | | °C | °F | | °C | °F | |
| MX ☐ | -40 | -40 | Class 2 | -70 | -100 | Class 1 | -20 | -4 | Class 3 |
| MXP* | -40 | -40 | Class 2 | -70 | -100 | Class 1 | -20 | -4 | Class 3 |

## Technical Data

| Dryer Models | Min Operating Pressure | | Max Operating Pressure | | Min Operating Temp | | Max Operating Temp | | Max Ambient Temp | | Electrical supply (standard | Electrical supply (optional) | Thread Connections | Noise Level |
|---|---|---|---|---|---|---|---|---|---|---|---|---|---|---|
| | bar g | psi g | bar g | psi g | °C | °F | °C | °F | °C | °F | | | | dB (A) |
| MXS | 4 | 58 | 13 | 190 | 5 | 41 | 50 | 122 | 55 | 131 | 85 - 265 V 1ph 50/60Hz | N/A | BSPP or NPT | <75 |
| MXA | 4 | 58 | 13 | 190 | 5 | 41 | 50 | 122 | 55 | 131 | 85 - 265 V 1ph 50/60Hz | N/A | BSPP or NPT | <75 |
| MXP* | 4 | 58 | 13 | 190 | 5 | 41 | 50 | 122 | 55 | 131 | N/A | N/A | BSPP or NPT | <75 |

## Controller Options

| Controller Options | Function | | | | | | | | |
|---|---|---|---|---|---|---|---|---|---|
| | Power on Indication | Fault Indication | Display Fault Condition Values | Service Interval Indication | Service Countdown Timers | Comfigurable Alarm Settings | Remote Volt Free Alarm Contacts | Filter Service Timer | DDS Energy Management System |
| SMART | • | • | | • | | | • | | |
| SMART DDS | • | • | | • | | | • | | • |
| ADVANCED | • | • | • | • | • | • | • | • | • |

***ATEX compliant option available.**

**For hazardous environments , a fully pneumatic ATEX compliant version of PNEUDRI is available.**

**ATEX Directive 94/9/EC**
**Group II, Category 2GD, T6.**

## Correction Factors

| Temperature Correction Factor CFT | | | | | | | |
|---|---|---|---|---|---|---|---|
| Maximum Inlet Temperature | °C | 25 | 30 | 35 | 40 | 45 | 50 |
| | °F | 77 | 86 | 95 | 104 | 113 | 122 |
| | CFT | 1.00 | 1.00 | 1.00 | 1.04 | 1.14 | 1.37 |

| Pressure Correction Factor CFP | | | | | | | | | | | |
|---|---|---|---|---|---|---|---|---|---|---|---|
| Minimum Inlet Pressure | bar g | 4 | 5 | 6 | 7 | 8 | 9 | 10 | 11 | 12 | 13 |
| | psi g | 58 | 73 | 87 | 100 | 116 | 131 | 145 | 160 | 174 | 189 |
| | CFP | 1.60 | 1.33 | 1.14 | 1.00 | 0.89 | 0.80 | 0.73 | 0.67 | 0.62 | 0.57 |

| Dewpoint Correction Factor CFD | | Option 2 | Standard | Option 1 |
|---|---|---|---|---|
| Required Dewpoint | PDP °C | -20 | -40 | -70 |
| | PDP °F | -4 | -40 | -100 |
| | CFD | 0.91 | 1.00 | 1.43 |

## Weights and Dimensions

| Model | Pipe Size | Dimensions | | | | | | Weight | |
|---|---|---|---|---|---|---|---|---|---|
| | | Height (H) | | Width (W) | | Depth (D) | | | |
| | | mm | ins | mm | ins | mm | ins | kg | lbs |
| MX ☐ 102C | 2" | 1647 | 64.8 | 687 | 27.0 | 550 | 21.7 | 235 | 518 |
| MX ☐ 103C | 2" | 1647 | 64.8 | 856 | 33.7 | 550 | 21.7 | 316 | 696 |
| MX ☐ 103 | 2" | 1892 | 74.5 | 856 | 33.7 | 550 | 21.7 | 355 | 782 |
| MX ☐ 104 | 2" | 1892 | 74.5 | 1025 | 40.3 | 550 | 21.7 | 450 | 992 |
| MX ☐ 105 | 2½" | 1892 | 74.5 | 1194 | 47.0 | 550 | 21.7 | 543 | 1197 |
| MX ☐ 106 | 2½" | 1892 | 74.5 | 1363 | 53.6 | 550 | 21.7 | 637 | 1404 |
| MX ☐ 107 | 2½" | 1892 | 74.5 | 1532 | 60.3 | 550 | 21.7 | 731 | 1611 |
| MX ☐ 108 | 2½" | 1892 | 74.5 | 1701 | 67.0 | 550 | 21.7 | 825 | 1818 |

MX ☐ 102c - 108

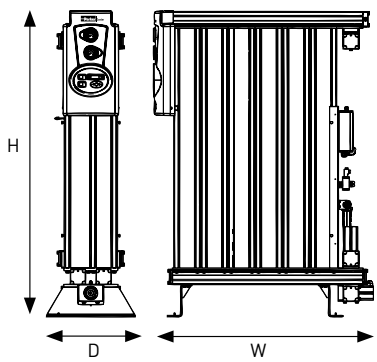


## Recommended Filtration

| For Dryer Model | Filter Pipe Size BSPT or NPT | Inlet General Purpose Pre-filter | Inlet High Efficiency Filter | Outlet Dust Filter |
|---|---|---|---|---|
| MX ☐ 102C | 2" | AO040H ☐ FX | AA040H ☐ FX | AR040H ☐ MX |
| MX ☐ 103C | 2" | AO040H ☐ FX | AA040H ☐ FX | AR040H ☐ MX |
| MX ☐ 103 | 2" | AO045H ☐ FX | AA045H ☐ FX | AR045H ☐ MX |
| MX ☐ 104 | 2" | AO045H ☐ FX | AA045H ☐ FX | AR045H ☐ MX |
| MX ☐ 105 | 2½" | AO050I ☐ FX | AA050I ☐ FX | AR050I ☐ MX |
| MX ☐ 106 | 2½" | AO055I ☐ FX | AA055I ☐ FX | AR055I ☐ MX |
| MX ☐ 107 | 2½" | AO055I ☐ FX | AA055I ☐ FX | AR055I ☐ MX |
| MX ☐ 108 | 2½" | AO055I ☐ FX | AA055I ☐ FX | AR055I ☐ MX |

☐ = G (BSPP) or N (NPT)

## Dryer Coding Example

| DRYER MODEL | CONTROLLER TYPE | NUMBER OF DRYING BANKS | NUMBER OF DRYING COLUMNS | DDS ENERGY MANAGEMENT |
|---|---|---|---|---|
| MX | S = Smart<br>A = Advanced | No of individual dryers in installation | Number of columns per dryer bank | DS = DDS Fitted (DDS standard with Advanced Controllers) |
| MX | S | 3 | 08 | DS |

Example: PNEUDRI model MXS308DS