Electronic safety sensors

Sensor CSS 300

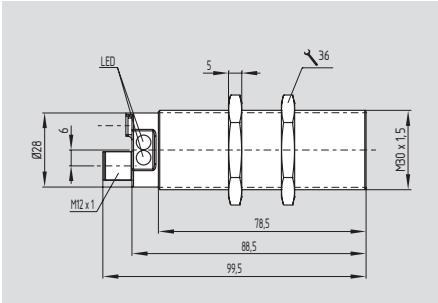

- Thermoplastic enclosure
- Ø M30
- **suitable for concealed mounting behind stainless steel**
- 2 short-circuit proof, p-type safety outputs (24 VDC per 250 mA)
- Self-monitored series-wiring of max. 31 sensors
- Comfortable diagnose through sensor LED and diagnostic output
- Max. length of the sensor chain 200 m
- Integral cross-wire, wire breakage and external voltage monitoring of the safety outputs
- With integrated connector

Approvals

TÜV c UL us CE

Ordering details

CSS 11-300-①-M-ST

No.	Option	Description
①	D	with diagnostic output
	SD	with serial diagnostic function

Sensor and actuator must be ordered separately!

Betätiger CST 30S-1

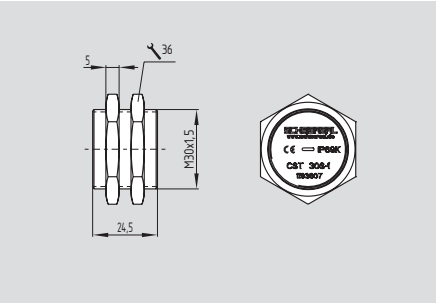

- Stainless steel enclosure
- Ø M30

Approvals

TÜV

Certification in combination with safety sensor

Ordering details

Actuator	**CST 30S-1**

Technical data

Standards:	IEC 60947-5-3, EN ISO 13849-1, IEC 61508
Enclosure:	thermoplastic
Mode of operation:	inductive
Switching distances to IEC 60947-5-3:	
Rates switching distance S_n:	11 mm
Assured switch-on point S_{ao}:	8 mm
Assured switch-off point S_{ar}:	15 mm
Hysteresis:	< 2 mm
Repeat accuracy:	< 1 mm
Switching frequency f:	3 Hz
Integrated connector:	M12, 8-pole
Series-wiring:	max. 31 components
Fuse:	external, 2 A
Cable length:	max. 200 m
Ambient conditions:	
Ambient temperature T_u:	−25 °C … +60 °C
Storage and transport temperature:	−25 °C … +85 °C
Resistance to vibration:	10…55 Hz, amplitude 1 mm
Resistance to shock:	30 g / 11 ms
Protection class:	IP65, IP67 to EN 60529
Electrical data:	
Rated operating voltage U_e:	24 VDC −15% / +10% (stabilised PELV)
Rated operating current I_e:	0.6 A
No-load current I_0:	max. 0.1 A; average 50 mA
Protection class:	II
Overvoltage category:	III
Degree of pollution:	3
Rated impulse withstand voltage U_{imp}:	0.8 kV
Rated insulation voltage U_i:	32 V
Response time:	< 60 ms
Duration of risk:	< 60 ms
Safety inputs X1/X2:	
Rated operating voltage U_e:	24 VDC −15% / +10% PELV gem. IEC 60204-1
Rated operating current I_e:	1 A

Note

Requirements for the safety controller
The safety monitoring module must tolerate internal functional tests of the safety outputs for 250 µs –1500 µs.

The 250 µs switch-off time of the safety sensor additionally will be extended depending on the cable length and the capacity of the cable used. Typically, a switch-off time of 500 µs is reached with a 100 m connecting cable. The safety monitoring module does not need to have a cross-wire short monitoring function

Electronic safety sensors

Technical data

Safety outputs Y1/Y2:

	NO function, 2-channel, p-type, short-circuit proof
Rated operating voltage U_{e1}:	24 VDC −15% / +10%
Voltage drop:	< 1 V
Leakage current I_r:	< 0.5 mA
Rated operating current I_{e1}:	max. 0.25 A
Minimum operating current I_m:	0.5 mA
Utilization category:	DC-12, DC-13
U_{e1}/I_{e1}:	24 VDC / 0.25 A
Required rated short-circuit current:	100 A
Diagnostic output:	p-type, short-circuit proof
Rated operating voltage U_{e2}:	24 VDC −15% / +10%
Voltage drop:	< 5 V
Rated operating current I_{e2}:	max. 0.05 A
Utilization category:	DC-12, DC-13
U_{e2}/I_{e2}:	24 VDC / 0.05 A
Serial diagnostic:	
Operating current:	150 mA short-circuit proof
Wiring capacitance for serial diagnostic:	max. 50 nF
Classification:	
Standards:	EN ISO 13849-1, IEC 61508
PL:	e
Category:	4
PFH value:	3,6 x 10^{-9} /h
SIL:	suitable for SIL 3 applications
Mission time:	20 years

Misalignment

The actuating curves represent the switch-on and switch-off distances of the safety sensor by the approach of the CST 30S-1 actuator.

If the safety sensor is mounted behind non-ferromagnetic stainless steel (V4A) either flush-mounted, the switching distance is reduced.

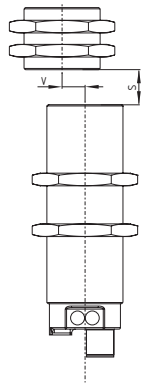

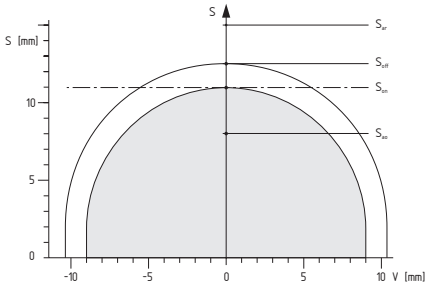

Legend

S	Switching distance
V	Misalignment
S_{on}	Switch-on distance
S_{off}	Switch-off distance
S_h	Hysteresis area $s_h = s_{on} - s_{off}$
S_{ao}	Assured switch-on distance
S_{ar}	Assured switch-off distance

System components

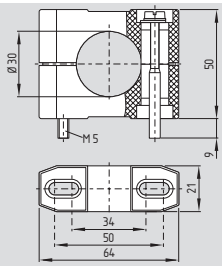

Terminal mounting H 30

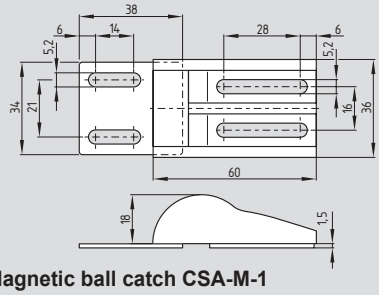

Magnetic ball catch CSA-M-1

Note

Additional Accessories:

SD Gateway	Page 1-90
Series-wiring accessories	Page 1-92
Connector	Page 1-89
Diagnostic tables	Online
Suitable safety monitoring modules	Page 5-2

Note

Detailed information about the use of the serial diagnostics can be found in the operating instructions of the PROFIBUS-Gateway SD-I-DPV0-2 and the Universal-Gateway SD-I-U-…. and in the instructions for the integration of the SD-Gateway.

More detailed product information can be found in the Electronic Safety Sensors and Solenoid Interlocks catalog.

Ordering details

Terminal mounting	**H 30**
Magnetic ball catch	**CSA-M-1**