Optoelectronic safety systems for the protection of man and machine

Product information

SCHMERSAL

www.comoso.com

SCHMERSAL

Contents

Schmersal offers its customers a comprehensive range of products for optoelectronic safeguarding of hazardous areas, ranging from light barriers, light grids and light curtains with different functions (e.g. blanking, muting, cascading). A large range of accessories, e.g. deflecting mirrors, mounting brackets etc. helps the user fitting and using those active optoelectronic protective devices (AOPD) in his specific application.

This brochure contains a brief introduction of the individual optoelectronic product families as well as the main accessories for the AOPD systems of the Schmersal Group.

The technical data of the individual devices are completed with wiring examples, e.g. in combination with Safety monitoring modules or for integration in the AS-i Safety at Work System. Appropriate components can be wired into a complete safety system.

Descriptions of technical correlations, details on external control units, installation or operating instructions or similar have been provided to the best of our knowledge. However, this does not mean that any warranted characteristics or other properties under liability law may be assumed which extend beyond the “General Terms of Delivery of Products and Services of the Electrical Industry”.

All the data mentioned in this catalog have been carefully checked. Subject to technical modifications and errors.

EN 61

The field of automation is subject to a permanent and innovative change of products and applications. The focus is on increasing the productivity and realizing a smooth-running production process with a minimum of human interventions on machinery and systems. The ideal, a fully automated and totally safe machine however will always remain a dream, though the robots used in production plants already are a big step towards this goal.
Human intervention and knowledge will always be required for the commissioning, monitoring and maintenance of modern industrial systems. Man however is not infallible and ignorance or lack of information, thoughtlessness or negligence often leads to damages.

For these reasons European directives such as the Machinery Directive 98/37/EC (2006/42/EG) and their corresponding standards were implemented at European level. These standards aim at detecting and constructively avoiding all possible risks and hazards during the planning and project phase of machines and systems. Safety components must be used to minimize or eliminate the residual risks.
In this way, manufacturers and users are making equivalent efforts to set up an optimal process flow, which offers the highest possible protection to the operating staff. The challenge for all manufacturers of safety components is to design efficient and safe product solutions for mechanical engineers. Flaps and doors are the simplest means of access to the machine.
These separating hardguarding safety solutions offer an efficient and effective protection against hazardous movements and products being ejected from the machine. When these safety guards are opened, the machine is brought to standstill (through the corresponding safety sensor transmitting the “stop” signal to the control), which interrupts and therefore slows down the production. In case of continuous processes, which must not be interrupted, solenoid interlocks protect man and the work piece against damages.
Safety fences are not suitable for production processes requiring the material to be transported into the working area by means of conveyor belts, as it does not allow for an ergonomic and optimal work sequence.

A “virtual safety guard“ in the form of an active optoelectronic device (AOPD), e.g. a safety light curtain, is a perfect solution, offering both an optimal protection of human life and uninterrupted production process.

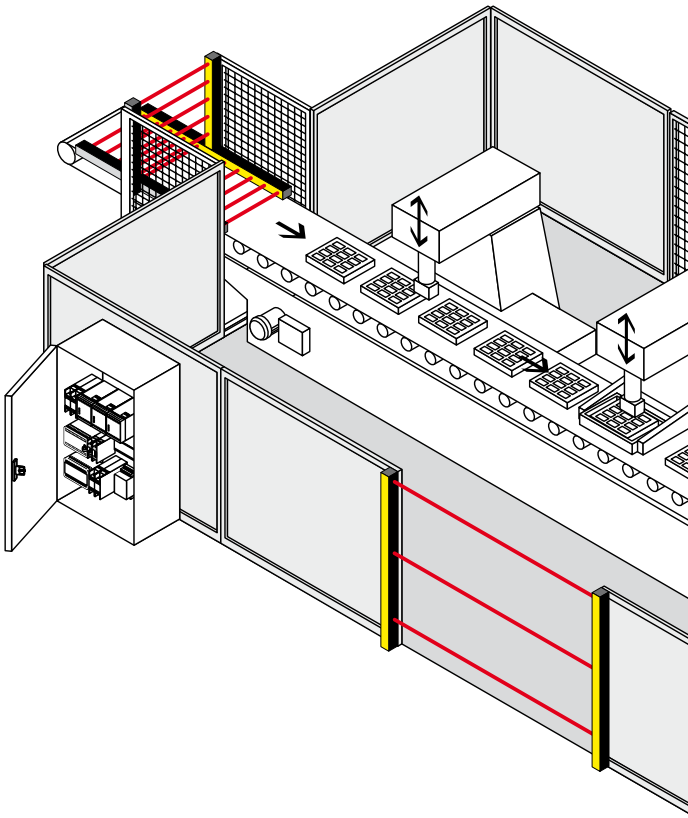

496

Typical applications:

- Power-driven machines
- Power-driven presses in metalworking, plastics, leather, stone working and rubber processing industry
- Folding presses and cutters
- Filter presses
- Punching machines in leather, textile and plastics processing
- Robots stations and welding booths
- Printing and injection moulding machines
- Transportation systems
- Pallet loaders and palletizers
- Materials handling and storage technology
- and so on

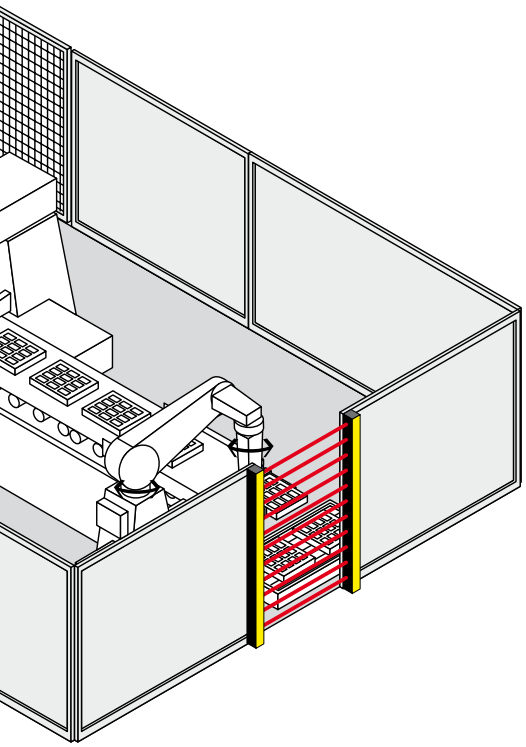

Depending on the application, the AOPD are used for point of operation, danger zone and perimeter guarding. The user can choose from a large range of different optoelectronic safety solutions e.g. light barriers, light grids and light curtains.

Optoelectronic

Safety light barriers

The safety light barrier systems of the SLB range are active optoelectronic protective devices (AOPD) fulfilling the Control Category 2 or 4 in accordance with EN 954-1 or EN 61496. These systems are used as entry guards on hazardous zones, points of operation and entrances.
They protect human life without restricting the production flow.
Typical applications for safety light barriers are on robots, automatic-processing plants, transfer lines, rack storages and pallet loaders.
The entire safety light barrier system includes a light emitter, a light receiver and a safety monitoring module.
This module monitors the signals of the emitter.
If the light beam is interrupted, a signal is emitted to bring the dangerous movement of the machine to standstill.
The safety monitoring module integrates functions such as start and restart inhibit as well as a contactor monitoring.
The maintenance-free safety sensors of the system with protection class IP 67 offer an integrated soiling check.
Because of their small size, safety light barriers can be fitted almost everywhere.

Safety light grids / light curtains

The safety light curtains and safety light grids of the SLC and SLG meet the requirements of Control Category 2 or 4 to EN 954-1 and Type 2 or Type 4 to EN 61496.
They safeguard points of operation and hazardous areas on different applications, e.g. presses, robot stations, injection moulding machines, pallet machines, etc.
In these active optoelectronic protective devices (AOPD), the emitter and receiver are fitted in two separate enclosures.
An invisible infrared signal is sent from the emitter and monitored by the receiver. If the light beam is interrupted by an object or a person, a stop signal is emitted to bring the machine to standstill.
The protection field is defined by the height and width of the protection field. The protected height is the range between the first and last infrared light beam of a light curtain.
The protected height defines the physical size of the system to be used.
The protected width or operating range is the distance between the transmitter and receiver unit.

For an accurate detection of objects with different sizes in the hazardous area, the user can choose between light grids and light curtains with different resolutions. Here, the following rule applies: the smaller the distance between two adjacent light beams, the more accurate the detection sensitivity of the AOPD.
For the detection of body parts, a distinction is made between finger, hand and body protection.
EN 999 or DIN EN ISO 13857 sets the biometric data for finger protection to 14 mm, for hand detection to 30 mm, for leg detection up to 70 mm and for body detection to over 70 mm.
Safety light grids with 2, 3 or 4 individual beams are generally used to detect the penetration of the entire human body.
Safety light curtains are multiple beam systems (> 5 individual beams) and can also detect smaller objects in case of intrusion into the protected field. The maintenance-free safety light curtains and light grids can be smoothly fitted using an M12 connector and are equipped with a diagnostic interface and LED indication for status messages.

Depending on the type of safety light curtain or light grid used, the components offer an integrated monitoring module with start/restart inhibit and external device monitoring.
Additional functions such as blanking, muting and cascading of the light curtains are available as well.
The SLC and SLG product series therefore offer a maximum of flexibility for safeguarding different points of operation.

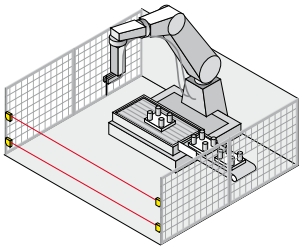

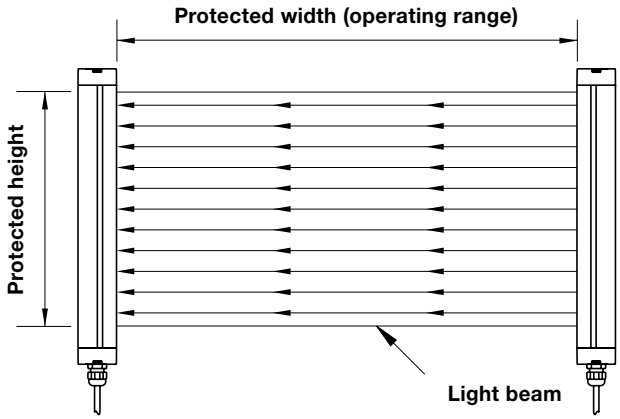

Important conditions for the use of optoelectronic safety devices:

In order to choose the appropriate active optoelectronic protective device (AOPD) such as light barriers and light curtains/grids and to use them correctly, both the requirements of the standards (EN 61496, EN 999, EN 294, C standards etc.) and product-specific features (detection sensitivity, range, etc.) must be taken into account. AOPD's can be used, provided that:

- the dangerous movement can be stopped at all times and that it is ensured that the dangerous area can only be reached after the movement has come to standstill,
- the run-out time of the machine and all safety components is known,
- no objects (work pieces, sparks, liquids, etc.) can be ejected,
- the AOPD meet the requirements of Type 2 or Type 4 acc. to EN 61496,
- the dangerous area can only be reached by passing through the protected field of the AOPD,
- reaching over, under or through the protected field is impossible,
- the start or restart command devices are fitted in such a way that the entire hazardous area is completely visible from the outside and that it cannot be activated from within the hazardous area
- and the safety distance is calculated and constructively applied in accordance with EN 999.

The effectiveness of the safety guard corresponds to the risk assessment, which was carried out during the planning and design phase, taking all important boundary conditions, e.g. environment, machine and function into account.

Safety

EN 999

Safety distances for light curtains

Between the interruption of a light beam and the standstill of the machine, a certain time expires. The safety light grid or light curtain must be sized and installed such that a stop would be signalled and the hazard ceased prior to a person or a body part accessing the hazard.
The standard EN 999 provides the user with detailed information about the calculation of the minimum safety distances. These include the following important influencing factors:

- run-out time of the entire system, taking the different reaction times of the individual systems into account (e.g. machine, safety monitoring module, AOPD etc.)
- capacity of the AOPD to detect body parts (fingers, hand and entire human body)
- set-up of the safety guard in normal condition (vertical fitting), parallel condition (horizontal fitting) or at an arbitrary angle in front of the safety guard and
- the speed at which the protection field is approached.

For the calculation of the minimum safety distance **S** to the hazardous area, EN 999 presents the following general formula:

$$S = K \times T + C$$

Where:
S the safety distance to the dangerous area (mm)

K the approach speed of the body or the body part (mm/s)

T the entire reaction time of the system(s) (including the machine's run-out time, the reaction time of the safety guard and the safety monitoring module etc.)

C additional distance (mm) in front of the safety guard

Normal approach for light curtains: (Resolution: max. 40 mm)

The minimum safety distance S is calculated in the following way:

$$S = 2000\ T + 8\ (D-14)$$

(**D** = Resolution)

This formula applies to safety distances up to 500 mm.
The minimum safety distance Smin may not be less than 100 mm.

If the calculation produces a distance larger than 500 mm for **S**, the calculation can be repeated with a lower approach speed:

$$S = 1600\ T + 8\ (D-14)$$

In this case, Smin may not be less than 500 mm.

If the dangerous area of the machine is accessible from the top because of its particular construction, the height H of the topmost beam of the light barrier must be at least 1800 mm above the base G of the machine.

Normal approach for light curtains: (Resolution: from 40 mm up to max. 70 mm)

The minimum safety distance **S** is calculated in the following way:

$$S = 1600\ T + 850$$

The height of the topmost light beam must be at least 900 mm, the height of the lowermost light beam maximum 300 mm above the bottom (for the protection of children younger than 14: 200 mm)

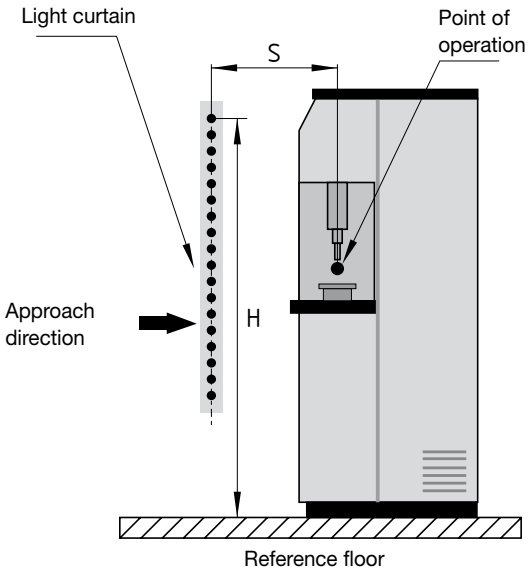

distance

Normal approach for light grids: (Resolution: > 70 mm)

The minimum safety distance **S** is calculated using the following formula:

S = 1600 T + 850

For safety guards with multiple beams, height H (mm) above the reference floor of the individual beams must be applied in the following way:

Number of beams	Height above the reference floor
2	400, 900
3	300, 700, 1100
4	300, 600, 900,1200

When using light curtains or light grids, particular attention must be paid to the tampering possibilities of the safety guard and to the mechanical risks (e.g. crushing, shearing, cutting, ejection).

Horizontal approach for light curtains/grids (Resolution: > 50 mm)

The minimum safety distance **S** is calculated using the following formula:

S = 1600 T + 1200 – 0.4 H

Here, Smin is 850 mm.
The lowest authorised height H depends on the resolution D of the light curtain:

H = 15 (D-50)

For this type of safety guard, the maximum height H is 1000 mm.
In the risk analysis, special attention must be paid to the prevention of unintentional undetected access from underneath the protection field.

Further calculation examples can be found in DIN EN 999 as well as in the mounting instructions of the SLC/SLG safety sensors.

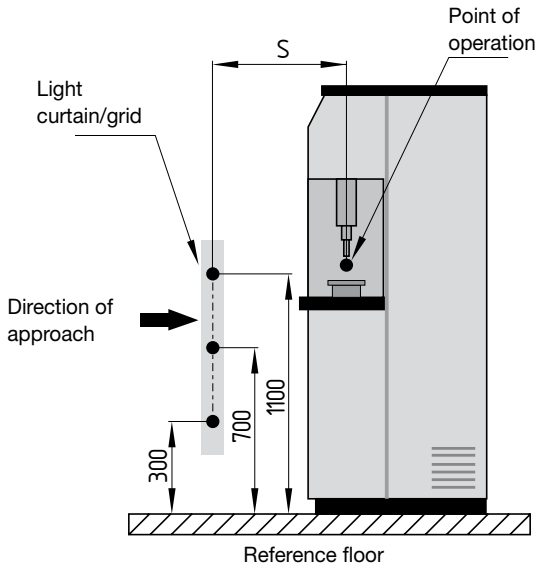

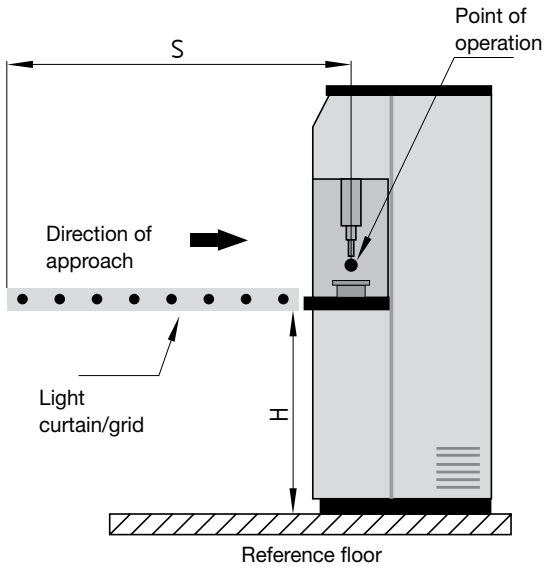

Master/Slave cascading

For the SLC/SLG…M/S product series, the master light curtain can be extended with another (slave) light curtain (cascading). In this way, multiple protection fields can be generated. A protection field is created between the emitter and receiver and between the slave components.

This device cascading provides for a comfortable and efficient protection of contiguous protection fields against reaching over or through the protection field. The slave light curtains are connected to the master by means of an M12 connector.
The master and slave light curtains are available in different sizes and resolutions and allow for almost any combination.

Muting

If goods or objects must be transported in or out of the hazardous area without stopping the machine, the safety light curtain must be automatically and temporarily suspended.

To this end, two or four muting sensors are used to detect whether a person is approaching the hazardous area or a transport system enters or leaves the hazardous area. Suitable muting sensors are light barriers, proximity switches or position switches. The integrated safety-muting controller of the safety light curtain or light grid monitors and controls the muting process.

The safety outputs are not disabled. Any malfunction of the monitored signal source will cause the OSSD's to be switched off.
Depending on the application, different light curtains with integrated muting function are available.
Detailed product information can be found in this brochure from page 33.

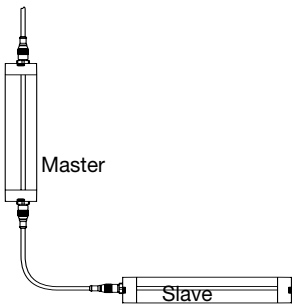

Blanking /Floating Blanking

If continuity of the production process is required, a part of the protection field can be blanked without triggering a stop signal.
In this way, objects such as work pieces can be fed or a conveyor belt can be positioned at a fixed position in the protection field.

The integrated floating blanking function of the SLC…B light curtains enables a flexible blanking of up to 2 adjacent light beams in the protection field of the light curtain. This function is required to ensure that one or two adjacent light beams can be interrupted at an undefined position in the protection field.

In this way, objects such as fixtures or materials with slightly varying heights can be fed through the light curtain without triggering a stop signal. Different blanking functions are available. The distinguishing feature of the different modes is the number of light beams that can be interrupted by an object. In addition to that, it can be defined whether the object may interrupt the protection field permanently or only temporarily. The interrupted light beams can be at any position in the protection field.

Apart from the first infrared light beam (the beam closest to the connector), any light beam can be used for blanking.

When blanking is applied, the resolution of the light curtain changes. The technical documentation of the different light curtains includes the tables with the effective resolutions D to calculate the minimum safety distance to EN 999.

Further technical product information can be found in this brochure.

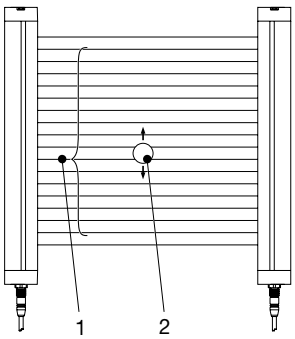

1 Floating-Blanking-Area
2 Movable object

Definitions and terms:

Start interlock:
A device preventing the automatic release and therefore the automatic machine start when the power supply of the AOPD is switched on or interrupted and switched on again.

AOPD:
The abbreviation of **A**ctive **O**ptoelectronic **P**rotective **D**evice.

Resolution:
The resolution or minimum object sensitivity represents the minimum size of an object that is detected in each part of the protection field.

Optoelectronic safety devices:
The here described are optoelectronic safety guards (AOPD), e.g. safety light barriers, safety light curtains, safety light grids and their corresponding safety relay modules.

Type 2 acc. to EN 61496-1:
The Type 2 AOPD is a protective device, whose safety function is checked by means of regular tests. These devices must meet the requirements of Control Category 2 acc. to EN 954-1.

Type 4 acc. to EN 61496-1:
The Type 4 AOPD is a protective device, whose safety function is not affected by a failure or error in the system. These devices must meet the requirements of Control Category 4 acc. to EN 954-1.

Blanking:
In this configurable operation mode a safety light curtain blanks out a precisely defined area in the protection field. The operation mode. “Blanking“ allows objects to be present in the sending area with out deactivating the light curtain safety outputs. “Fixed Blanking” is when a fixed set of adjacent light beams are rendered inactive for the purpose of entering an object and pans into the protective area. “Floating Blanking“ is when a set member (one or more) of adjacent beams is allowed to ignore the presence of an object and not deactivating the OSSDs of the light curtain.

Muting:
Muting is a temporary automatic suspension of a safeguarding function by safety-related parts of the control system during otherwise safe conditions in the operation of a machine. The safeguarding function is realized through 2 or 4 muting sensors, which can distinguish between persons and objects.
The suspension condition is signalled by means of a muting signal lamp.

OSSD:
Output **S**ignal **S**witching **D**evice of the AOPD (to EN 61496)

Protection field:
The protection zone is an invisible, two-dimensional light curtain consisting of infrared light beams, installed between the emitter and receiver unit. Depending on the chosen resolution (detection sensitivity) objects of a specific size intruding this light curtain will be detected.

Operating Range:
The operating range is the maximum distance that may exit between the light curtain´s ermitter and its receiver.

Protected height:
The protected height is a vertical area between the first and the last infrared light beam of an optoelectronic safety guard. (not the total housing length)
The beginning and the end of this area is marked with symbols on the SLC/SLG’s enclosure.

Restart interlock:
A device preventing the automatic restart of the machine, when the protection field is interrupted during a dangerous machine cycle or when the operating mode of the machine is set or changed.

System features:

- Control Category 2 and 4 acc. to EN 954-1 or acc. to EN 61496, Type 2 and Type 4
- Up to 4 pairs of one-way light barriers can be connected
- Different functions:
  Start/Restart interlock
  Contactor monitoring
  Cyclic testing
- Integrated soiling check
- Status and error indication
- Signalling outputs for external indications
- Free of maintenance
- Extremely compact design
- Simple and flexible mounting and adjustment

SLB 200

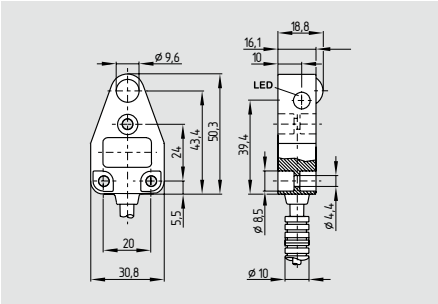

- Control Category 2* to EN 954-1
- Range to 4 m
- LEDs visible from both sides
- Protection class IP 67

Approvals

TÜV CE

Technical data

Standards:	IEC/EN 61496
Control Category:	2
Enclosure:	ABS 10 % GF
Enclosure dimensions:	31 x 50.5 x 19 mm
Connection:	emitter: 10 cm conductor, M8, 3-pole coupler socket receiver: 10 cm conductor, M8, 4-pole coupler socket
Max. cable length:	50 m
Protection class:	IP 67
Response time:	30 ms *
Range:	4 m
Start/Restart interlock:	*
Contactor control:	*
Light emission wavelength:	880 nm
U_e:	24 VDC ± 20%
Safety outputs:	*
Angle of radiation:	± 4°
Min. size of object:	9 mm Ø
LED status indication:	soiling, switching condition and power on
Ambient temperature:	– 10 °C ... + 55 °C
Storage and transport temperature:	– 20 °C ... + 80 °C

* only in combination with safety monitoring module SLB 200-C04-1R

System components

SLB 200-C04-1R

Connector plug M 8 x 1 (with cable)

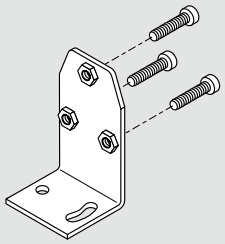

Mounting angle BF 31

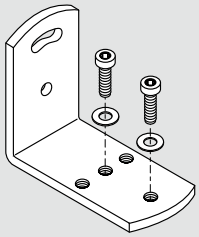

Mounting angle BF UNI 1

Ordering details

SLB 200-①31-21

No.	Option	Description
①	E	Emitter
	R	Receiver

Note

The system components (safety monitoring module, cable, etc.) are not included in delivery.

Ordering details

Monitoring of safety light barriers	
SLB 200-C04-1R	**refer to page 16**
Connector plug M8	
emitter:	
female connector	**KDE M8-3 (without cable)**
female connector	**KDE M8-3-2m**
female connector	**KDE M8-3-5m**
receiver:	
female connector	**KDR M8-4 (without cable)**
female connector	**KDR M8-4-2m**
female connector	**KDR M8-4-5m**
Mounting angles	**BF 31**
Mounting angles universal	**BF UNI 1**

SLB 400

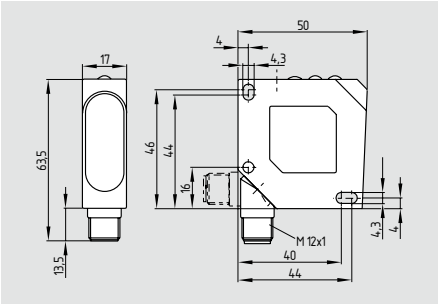

- Control Category 4* to EN 954-1
- Range to 15 m
- Connecting plug can be rotated
- LED switching conditions display
- Protection class IP 67

Approvals

Technical data

Standards:	IEC/EN 61496
Control Category:	4*
Enclosure:	ABS
Enclosure dimensions:	50 x 50 x 17 mm
Connection:	Connector connector plug M12, 4-pole socket, can be rotated
Max. cable length:	100 m
Protection class:	IP 67
Response time:	25 ms*
Range:	15 m
Start/Restart interlock:	*
Contactor control:	*
Light emission wavelength:	880 nm
U_e:	24 VDC ± 20%
Safety outputs:	*
Angle of radiation:	± 2°
Min. size of object:	13 mm Ø
LED status indication:	soiling, switching condition and power on
Ambient temperature:	0 °C ... + 60 °C
Storage and transport temperature:	– 20 °C … + 80 °C

* only in combination with safety monitoring module SLB 400-C10-1R

System components

SLB 400-C10-1R

Connector plug M 12 x 1 (with cable)

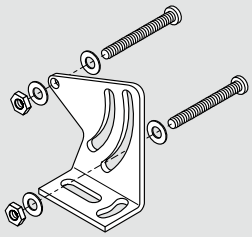

Mounting angle BF 50

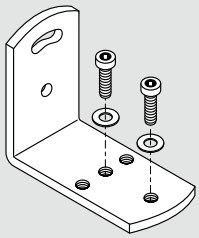

Mounting angle BF UNI 1

Ordering details

SLB 400-①50-21P

No.	Option	Description
①	E	Emitter
	R	Receiver

Note

The system components (safety monitoring module, cable, etc.) are not included in delivery.

Ordering details

Monitoring of safety light barriers	
SLB 400-C10-1R	**refer to page 18**
Connector plug M12 emitter/receiver:	**KD M12-4 (without cable)**
	KD M12-4-2m
	KD M12-4-5m
Mounting angles	**BF 50**
Mounting angles universal	**BF UNI 1**

SLB 200-C

- Control Category 2 to EN 954-1, AOPD-T
- Up to two pairs of light barrier devices can be connected
- 1 enabling path
- 1 signalling output
- Operating voltage 24 VDC
- Test input
- LED display of switching conditions
- Response time ≤ 30 ms
- Start/Restart interlock can be switched active or inactive
- Contactor monitoring can be switched active or inactive
- Additional cyclic testing
- Co-ordinated for use with SLB 200 R/E safety light barriers

Approvals

TÜV CE

Ordering details

SLB 200-C04-1R

Technical data

Standards:	IEC/EN 61496-1/-2, EN 954-1
Control category:	2
Start-up test:	yes
Start conditions:	Test button, start-reset button, on/off coding
Feedback circuit:	yes
Enclosure:	polycarbonate
Mounting:	snaps onto standard DIN rail to EN 50022
Connection:	screw terminals
Cable section:	max. 4 mm^2 (incl. conductor ferrules)
Protection class:	IP 20
U_e:	24 VDC ± 20%
I_e:	180 mA
Inputs:	test input: command device: NC contact release start/restart interlock (start/reset): enable via command device (NO contact), contactor monitoring (NC contacts)
Monitored inputs	max. 2 pairs of light barriers
Input resistance:	–
Max. cable length:	–
Test and feedback:	potential-free contact
Outputs:	1 enabling path
Enabling contacts:	1 enabling path
Utilisation category:	AC-15, DC-13
I_e/U_e:	2 A / 250 VAC, 2 A / 24 VDC
Contact load capacity:	max. 250 VAC, max. 2 A (cos φ = 1)
Switching voltage:	max. 250 VAC
Load current:	8 A
Max. fuse rating:	4 A gG D-fuse
Signalling output:	1 transistor output
Switch-on conditions:	test duration: ≤ 150 ms (without relay control) ≤ 450 ms (with relay control)
Switch-off time:	response time (complete sy.): ≤ 30 ms
Indications:	red LED for light barrier interrupted green LED for light barrier free soiling: flashing red/green
Function display:	4 LEDs
EMC rating:	conforming to EMC Directive
Max. switching frequency:	10 Hz
Overvoltage category:	II to DIN VDE 0110
Degree of pollution:	3 to DIN VDE 0110
Resistance to vibration:	10 ... 55 Hz / amplitude 0.35 mm
Resistance to shock:	10 g / 16 ms
Ambient temperature:	0 °C … + 50 °C
Storage and transport temperature:	– 20 °C … + 80 °C
Dimensions:	45 x 84 x 118 mm
Note:	Inductive loads (e.g. contactors, relays, etc.) are to be suppressed by means of a suitable circuit.

Note

- For protection in Control Category 2 to EN 954-1
- Monitoring two pairs of light barrier devices and the power contactor using the SLB 200-C safety monitoring module
- Test push button Ⓣ
  The test push button is connected to X13 and X14 in order to carry out a check of the light barrier monitoring function. The terminals X15 and X16 must be bridged.
- The wiring diagram is shown for the de-energised condition.
- Contactor check
  To monitor an external contactor, the feedback circuit is connected to X17 and X18. The terminals X19 and X20 must be bridged.
- Start push button Ⓢ
  The start push button can be used to start the monitoring of the light barriers for a new start or after an interruption. The terminals X3 and X4 must be bridged.
- It is also possible to connect only one pair of light barrier devices.

Wiring diagram

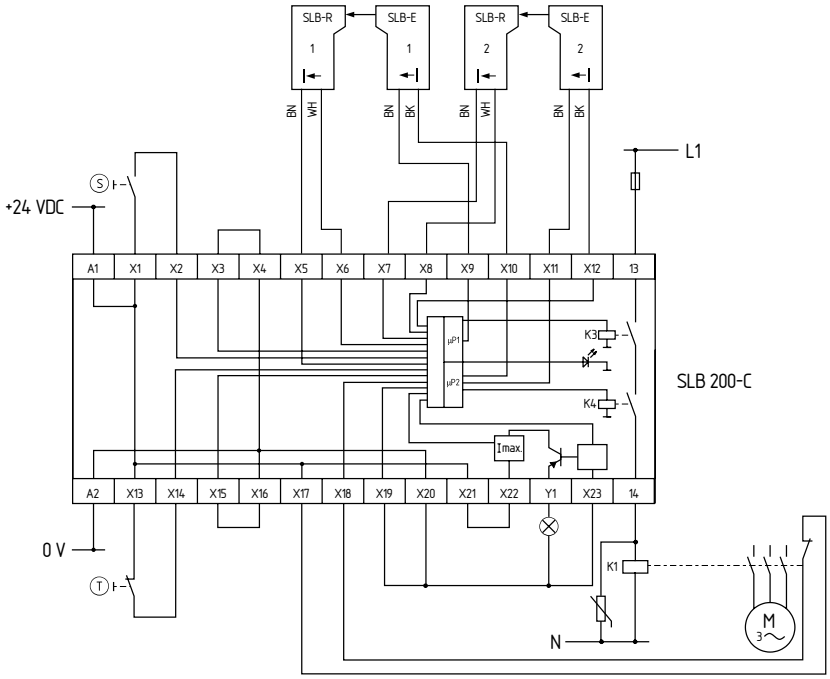

Note

In order to set for the desired mode of operation and number of light barriers connected, remove the front cover of the safety monitoring module. As supplied all switches are in Position 1.

Note

The required functions can be selected by means of the internal DIP switches.

	DIP switch 1	DIP switch 2	DIP switch 3
Position 1	With contactor check	With start/restart interlock	Connection of two light barriers
Position 2	Without contactor check	Without start/restart interlock	Connection of one light barrier

SLB 400-C

- Control Category 4 to EN 954-1, AOPD-S
- Cross-wire monitoring
- ISD Integral System Diagnostics
- Operating voltage 24 VDC
- Feedback circuit to monitor external contactors
- Two short-circuit proof additional transistor outputs
- Response time ≤ 30 ms
- Start/Restart interlock can be switched active or inactive
- Contactor monitoring can be switched active or inactive
- Can be coded
- Up to 4 light barrier pairs SLB 400 can be connected

Approvals

Ordering details

SLB 400-C10-1R

Technical data

Standards:	IEC/EN 61496-1/-2, EN 954-1
Control category:	4
Start-up test:	yes
Start conditions:	Start-reset button, on/off coding
Feedback circuit:	yes
Enclosure:	glass-fiber reinforced thermoplastic
Mounting:	snaps onto standard DIN rail to EN 50022
Connection:	screw terminals
Cable section:	max. 4 mm^2 (incl. conductor ferrules)
Protection class:	terminals IP 20, enclosure IP 40
U_e:	24 VDC ± 15%
I_e:	0.3 A without additional transistor outputs
Inputs:	S1, S2
Monitored inputs	max. 4 pairs of light barriers
Input resistance:	approx. 2 kΩ to ground
Input signal „1“:	10 ... 30 VDC
Input signal „0“:	0 ... 2 VDC
Max. cable length:	100 m of 0.75 mm^2 conductor
Outputs:	2 enabling paths
Enabling contacts:	2 enabling paths
Utilisation category:	AC-15, DC-13
I_e/U_e:	2 A / 250 VAC, 2 A / 24 VDC
Contact load capacity:	max. 250 VAC, max. 2 A (cos φ = 1)
Switching voltage:	max. 250 VAC
Load current:	max. 2 A
Switching capacity:	max. 500 VA
Max. fuse rating:	2 A gG D-fuse
Additional outputs:	additional transistor outputs Y1, Y2, Ue – 4 V, 100 mA total, short-circuit proof, p-type
Signalling output:	2 transistor outputs, Y1 + Y2 = max. 100 mA, p-type, short-circuit proof
Switch-on time:	–
Response time:	≤ 25 ms
Monitoring for synchronism of muting sensors:	–
Indications:	ISD
Function display:	9 LEDs (ISD*)
EMC rating:	conforming to EMC Directive
Max. switching frequency:	10 Hz
Overvoltage category:	II to DIN VDE 0110
Degree of pollution:	3 to DIN VDE 0110
Resistance to vibration:	10 ... 55 Hz / amplitude 0.35 mm, ± 15 %
Resistance to shock:	30 g / 11 ms
Ambient temperature:	0 °C ... + 55 °C
Storage and transport temperature:	– 25 °C ... + 70 °C
Dimensions:	99.7 x 75 x 110 mm
Note:	Inductive loads (e.g. contactors, relays, etc.) are to be suppressed by means of a suitable circuit.

Note

- For protection in Control Category 4 to EN 954-1
- Monitoring up to four pairs of light barrier devices and the power contactors using the SLB 400-C safety monitoring module
- The wiring diagram is shown for the de-energised condition.
- Connection of two pairs of safety light barrier devices
  When two pairs of safety light barriers are connected, the terminals X9-X10 and X11-X12 must be bridged.
- Restart push button Ⓡ
  The restart function can be selected by means of the DIP switches. When a start push button is connected to X5 and X6, it must be operated for min. 250 ms and max. 5 s after an interruption of the safety light barriers.

Wiring diagram

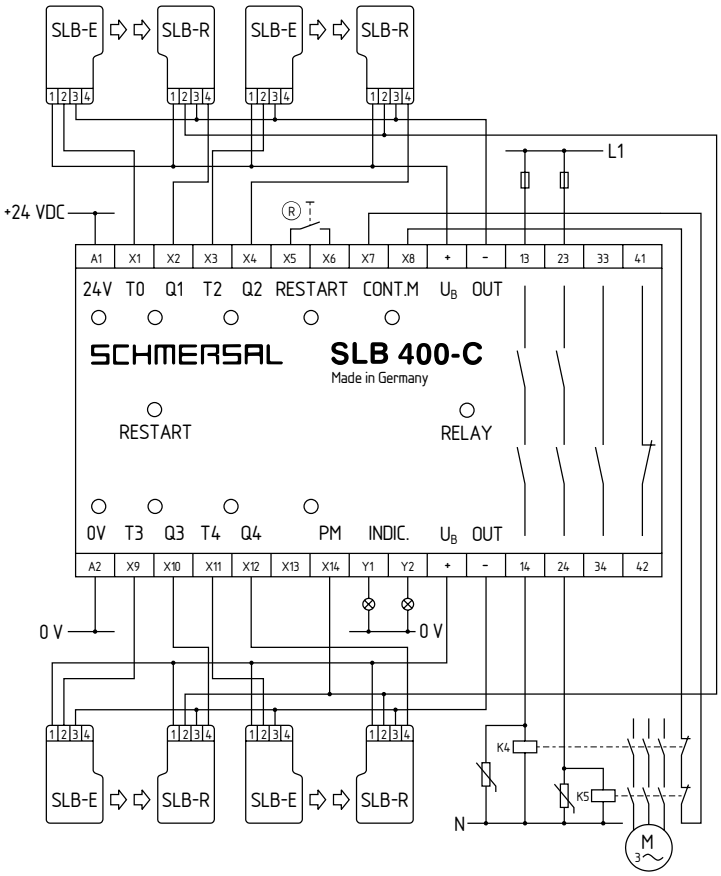

ISD

The following faults are registered by the safety monitoring modules and indicated by ISD

- Short-circuit on the connecting leads
- Interruption of the connecting leads
- Failure of the safety relay to pull-in or drop-out
- Fault on the input circuits or the relay control circuits of the safety monitoring module
- Mutual influence between the connected pairs of light barrier device and others on neighbouring systems

Note

The ISD tables (Intergral System Diagnostics) for analysis of the fault indications and their causes are shown in the manual.

System components

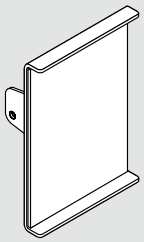

Mirror SLB 200/400 SMA 80

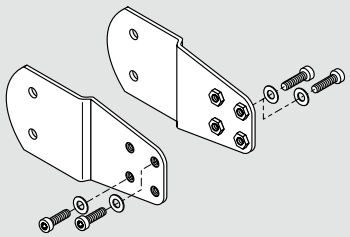

Mounting angle BF SMA 80-1

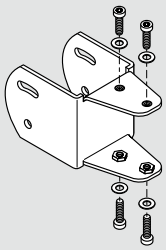

Mounting angle BF SMA 80-2

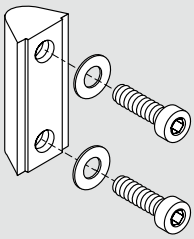

T-slot nut NST 20-8

System components

Mounting post ST 1250

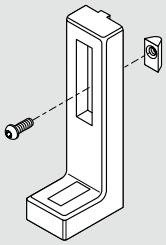

Floor-stand base STB 1

Ordering details

Mirror	**SMA 80**
Mounting angles for mirror	**BF SMA 80-1**
	BF SMA 80-2
T-slot nut	**NST 20-8**

Ordering details

Mounting post	**ST 1250**
Floor-stand base	**STB 1**

Safety light curtains and safety light grids

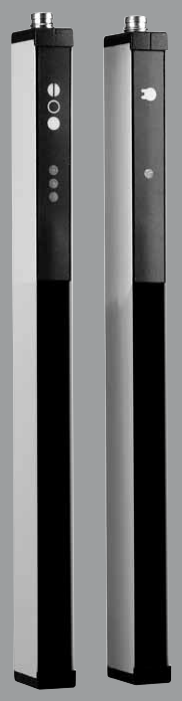

System features:

- Control Category 2 and 4 acc. to EN 61496, Type 2 and Type 4
- Different integrated functions:
  Start/Restart interlock
  Contactor monitoring
  Muting
  Blanking
  Master/Slave configuration
- Diagnostic display
- Optical synchronisation
- Maintenance- free
- Compact design
- Simple, flexible mounting and adjustment

SLC 220 standard

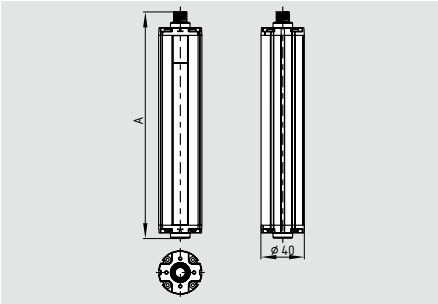

- **Safety light curtain**
- Control category Type 2 to IEC/EN 61496-1, -2
- Resolution 30 and 80 mm
- Protection field heights from 175 mm to 1675 mm
- **Integrated start/restart interlock**
- **Integrated contactor control†**
- **Integrated blanking function†**
- **Diagnostic and parametrization interface†**
- Range 0,3 m ... 14 m
- Integrated self-test
- Fail-safe transistor outputs
- Status display
- Protection class IP 65
- Signalling output

Legend:
A: Total length
Protection field height 175 mm: A = 216 mm
Protection field height 250 ... 1675 mm:
A = 28,5 mm + Protection field height

Approvals

TÜV cULus CE

SLG 220 standard

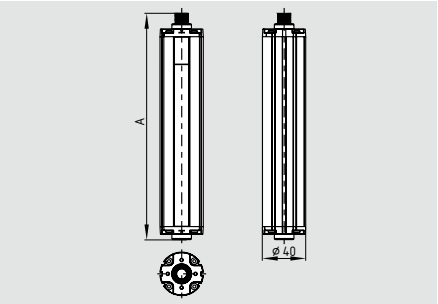

- **Safety light grid**
- 2-, 3- or 4-beam light grid
- Range 0,3 ... 30 m

Legend:
A: Total length
A = 78,5 mm + Distance between outermost beams

Approvals

TÜV cULus CE

Technical data

Standards:	IEC/EN 61496-1/-2 Type 2
Enclosure:	Aluminium
Enclosure dimensions:	ø 40 mm
Connection:	Connector Connector plug M12, 8-pole
Max. cable length:	100 m / 1Ω
Protection class:	IP 65 to EN 60529
Response time:	9 … 45 ms (depends on length and resolution)
Detection sensitivity (Resolution):	30 and 80 mm
Protection field height:	
Resolution 30 mm	175 ... 1675 mm
Resolution 80 mm	325 ... 1675 mm
2-, 3-, 4-beam	500, 800, 900 mm
Protection field width, Range:	0,3 ... 6 m (Standard),
SLC	4 ... 14 m (High range)
SLG	5 ... 30 m (High range)
Start/restart interlock:	Integrated
Contactor control:	Integrated
Blanking function:	Integrated
Light emission wavelength:	880 nm (infrared)
U_e:	24 VDC ± 10%
Safety outputs:	2 x PNP, 200 mA
Signalling output:	PNP 100 mA
Power consumption:	Emitter 4 W, Receiver 8 W
Data interface:	RS 485
Status and diagnostics:	LED display
Ambient temperature:	–10 °C … + 50 °C
Storage and transport temperature:	– 20 °C … + 70 °C
Safety classification:	
to IEC/EN 61508:	SIL 2
to EN ISO 13849-1:	PL d
	PFH-value: 3,59 x 10^{-8} / h

Ordering details

SLC 220-E/R①-②RFB-③

No.	Option	Description
①	xxxx	Protected heights (mm) Available lengths: 0175*, 0250*, 0325, 0475, 0625, 0775, 0925, 1075, 1225, 1375, 1525, 1675
②	30	Resolution 30 mm
	80	Resolution 80 mm
③		Range 0,3 m ... 6 m
	H	High Range 4 m ... 14 m

Ordering details

SLG 220-E/R①RF-②

No.	Option	Description
①		Distance between outermost beams:
	0500-02	500 mm, 2-beam
	0800-03	800 mm, 3-beam
	0900-04	900 mm, 4-beam
②		Range 0,3 m ... 6 m
	H	High Range 5 m ... 30 m

Mounting brackets are included in the delivery.

Ordering details

Connector:
Connector plug M12, 8-pole straight for emitter/receiver

Cable length 5 m	**KA-0904**
Cable length 10 m	**KA-0905**
Cable length 20 m	**KA-0908**

Notes
* only for resolution 30 mm
†Curtains delivered with EDM turned off — NSR0700 required for programming these functions

SLG 220-P

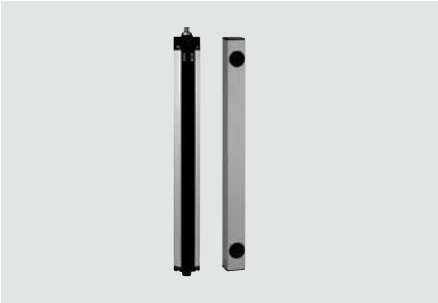

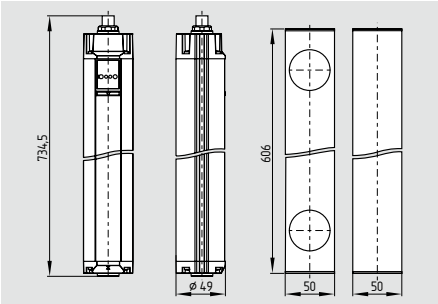

- **Safety light grid**
- Emitter and receiver in one enclosure (retro reflector)
- Control category Type 2 to IEC/EN 61496-1, -2
- Protection field heights 500 mm
- 2-beam light grid
- **Integrated start/restart interlock**
- **Integrated contactor control†**
- Range 0,3 m ... 6 m
- Fail-safe transistor outputs
- Status display
- Protection class IP 65

Technische Daten

Standards:	IEC/EN 61496-1/-2 Type 2
Enclosure:	Aluminium
Enclosure dimensions:	ø 40 mm
Deflecting mirror:	50 x50 x 606 mm
Connection:	Connector Connector plug M12, 8-pole
Max. cable length:	100 m / 1 Ω
Protection class:	IP 65 to EN 60529
Response time:	12 ms
Detection sensitivity (Resolution):	500 mm
Protection field height:	
2-beam	500 mm
Protection field width, Range:	
2-beam	0,3 m ... 7 m
Start/restart interlock:	Integrated
Contactor control:	Integrated
Light emission wavelength:	880 nm (infrared)
U_e:	24 VDC ± 10%
Safety outputs:	2 x PNP, 200 mA
Signalling output:	PNP 100 mA
Power consumption:	10 W
Data interface:	–
Status and diagnostics:	LED display
Ambient temperature:	–10 °C ... + 50 °C
Storage and transport temperature:	– 20 °C ... + 70 °C
Safety classification:	
to IEC/EN 61508:	SIL 2
to EN ISO 13849-1:	PL d
	PFH-value: 3,59 x 10^{-8} / h

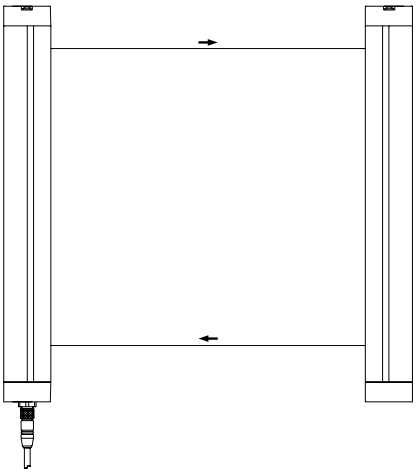

Approvals

TÜV c UL us CE

Ordering details

SLG 220-P-E/R0500-02RF	Safety light grid
ULS-P-0500	Deflecting mirror

†Curtains delivered with EDM turned off — NSR0700 required for programming these functions

Ordering details

Connector:

Connector plug M12, 8-pole straight

Cable length 5 m	**KA-0904**
Cable length 10 m	**KA-0905**
Cable length 20 m	**KA-0908**

Mounting brackets are included in the delivery.

SLC 220 Master / Slave

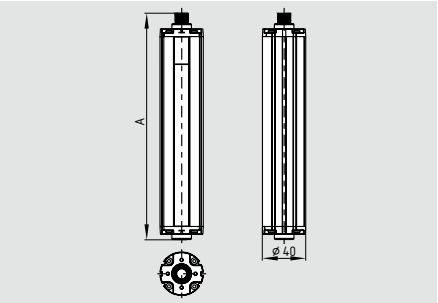

- **Safety light curtain**
- Control category Type 2 to IEC/EN 61496-1, -2
- Resolution 30 and 80 mm
- Protection field height:
  Master from 175 mm to 1675 mm
  Slave from 325 mm to 775 mm
- **Integrated start/restart interlock**
- **Integrated contactor control†**
- **Diagnostic and parametrization interface†**
- **Cascading of Master and Slave devices**
- Range 0,3 m ... 6 m
- Fail-safe transistor outputs
- Status display
- Protection class IP 65
- Signalling output
- Integrated self-test

Legend:
A: Total length
Protection field height 175 mm: A = 216 mm
Protection field height 250 ... 1675 mm:
A = 28,5 mm + Protection field height

†Curtains delivered with EDM turned off — NSR0700 required for programming these functions

Approvals

TÜV c UL us CE

Technical data

Standards:	IEC/EN 61496-1/-2 Type 2
Enclosure:	Aluminium
Enclosure dimensions:	ø 40 mm
Connection:	Connector
Master Emitter:	Connector plug M12, 8-pole,
Master Receiver:	Connector plug M12, 8-pole
Slave Emitter:	Connector plug M12, 6-pole,
Slave Receiver:	Connector plug M12, 6-pole
Max. cable length:	100 m / 1Ω
Max. cable length: (Master/Slave)	0,3 m
Protection class:	IP 65 to EN 60529
Response time:	12 … 65 ms (depends on length and resolution)
Detection sensitivity (Resolution):	30 and 80 mm
Protection field height:	
Resolution 30 mm	175 ... 2450 mm
Resolution 80 mm	325 ... 2450 mm
Protection field width, Range:	0,3 ... 6 m
Start/restart interlock:	Integrated
Contactor control:	Integrated
Cascading: (Master/Slave)	possible
Light emission wavelength:	880 nm (infrared)
U_e:	24 VDC ± 10%
Safety outputs:	2 x PNP, 200 mA
Signalling output:	PNP, 100 mA
Power consumption:	Emitter 4 W, Receiver 8 W
Data interface:	RS 485
Status and diagnostics:	LED display
Ambient temperature:	–10 °C … + 50 °C
Storage and transport temperature:	– 20 °C … + 70 °C
Safety classification:	
to IEC/EN 61508:	SIL 2
to EN ISO 13849-1:	PL d
	PFH-value: 3,59 x 10^{-8} / h

Ordering details

SLC 220-E/R①-②-RFB③

No.	Option	Description
①	xxxx	Protected heights (mm) Available lengths: 0175*, 0250*, 0325, 0475, 0625, 0775, 0925, 1075, 1225, 1375, 1525, 1675
②	30	Resolution 30 mm
	80	Resolution 80 mm
③	M	Master function
	S	Slave function**

Different lengths and resolutions can be combined for Master/Slave.

Ordering details

Connector:

Connector plug M12 x 1, 8-pole straight for emitter/receiver	
Cable length 5 m	**KA-0904**
Cable length 10 m	**KA-0905**
Cable length 20 m	**KA-0908**
for Master/Slave connection 2 x M12, 6-pole straight	
Cable length 0,3 m	**KA-0907**

Mounting brackets are included in the delivery.

Notes
* only for resolution 30 mm
** only protected heights from 325 mm to 775 mm

SLC 220 IP 69K

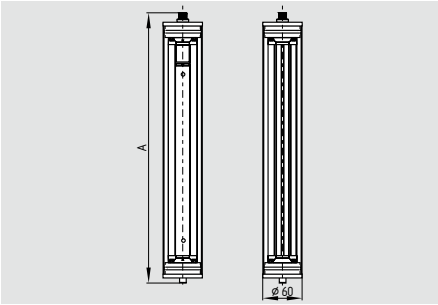

- **Safety light curtain**
- Control category Type 2 to IEC/EN 61496-1, -2
- Resolution 30 and 80 mm
- Protection field heights from 175 mm to 1675 mm
- **Protection class IP 69K**
- **Integrated start/restart interlock**
- **Integrated contactor control†**
- **Integrated blanking function†**
- **Diagnostic and parametrization interface†**
- Range 0,3 m ... 14 m
- Integrated self-test
- Fail-safe transistor outputs
- Status display
- Signalling output

Legend:
A: Total length
A = 54 mm + Protection field height

Approvals

TÜV cULus under preparation CE

Ordering details

SLC 220-E/R①-②-69-RFB-③

No.	Option	Description
①	xxxx	Protected heights (mm) Available lengths: 0175*, 0250*, 0325, 0475, 0625, 0775, 0925, 1075, 1225, 1375, 1525, 1675
②	30	Resolution 30 mm
	80	Resolution 80 mm
③		Range 0,3 m ... 6 m
	H	High Range 4 m ... 14 m

Notes
* only for resolution 30 mm

SLG 220 IP 69K

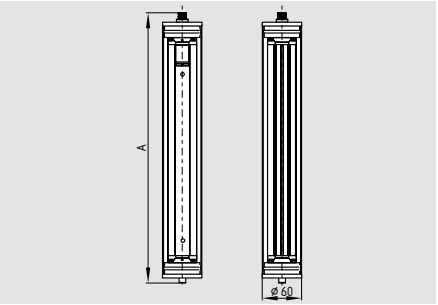

- **Safety light grid**
- 2-, 3- or 4-beam light grid
- Range 0,3 ... 30 m

Legend:
A: Total length
A = 104 mm + Distance between outermost beams

Approvals

TÜV cULus under preparation CE

Ordering details

SLG 220-E/R①-69-RF-②

No.	Option	Description
①		Distance between outermost beams:
	0500-02	500 mm, 2-beam
	0800-03	800 mm, 3-beam
	0900-04	900 mm, 4-beam
②		Range 0,3 m ... 6 m
	H	High Range 5 m ... 30 m

Mounting brackets (stainless steel) are included in the delivery.

Technical data

Standards:	IEC/EN 61496-1/-2 Type 2
Enclosure:	Aluminium
Enclosure dimensions:	ø 60 mm
Connection:	Cable with connector M12, 8-pole 5 m long
Max. cable length:	100 m / 1Ω
Protection class:	IP 69K
Response time:	9 … 45 ms (depends on length and resolution)
Detection sensitivity (Resolution):	30 and 80 mm
Protection field height:	
Resolution 30 mm	175 ... 1675 mm
Resolution 80 mm	325 ... 1675 mm
2-, 3-, 4-beam	500, 800, 900 mm
Protection field width, Range:	0,3 ... 6 m (Standard),
SLC	4 ... 14 m (High range)
SLG	5 ... 30 m (High range)
Start/restart interlock:	Integrated
Contactor control:	Integrated
Blanking function:	Integrated
Light emission wavelength:	880 nm (infrared)
U_e:	24 VDC ± 10%
Safety outputs:	2 x PNP, 200 mA
Signalling output:	PNP, 100 mA
Power consumption:	Emitter 4 W, Receiver 8 W
Data interface:	RS 485
Status and diagnostics:	LED display
Ambient temperature:	–10 °C … + 50 °C
Storage and transport temperature:	– 20 °C … + 70 °C
Safety classification:	
to IEC/EN 61508:	SIL 2
to EN ISO 13849-1:	PL d
	PFH-value: 3,59 x 10^{-8} / h

†Curtains delivered with EDM turned off — NSR0700 required for programming these functions

SLC 420 standard

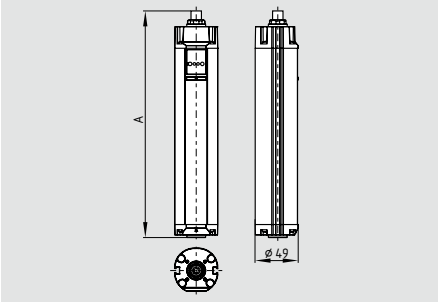

- **Safety light curtain**
- Control category Type 4 to IEC/EN 61496-1, -2
- Resolution 14, 30 and 50 mm
- Protection field heights from 170 mm to 1770 mm
- **Integrated start/restart interlock**
- **Integrated contactor control†**
- **Integrated blanking function (fixed and mobile blanking)†**
- **Diagnostic and parametrization interface†**
- Range 0,3 m ... 18 m
- Fail-safe transistor outputs
- Optical synchronisation
- Status display
- **Protection class IP 67**

Legend:
A: Total length
A = 84,5 mm + Protection field height

Approvals

TÜV cULus CE

SLG 420 standard

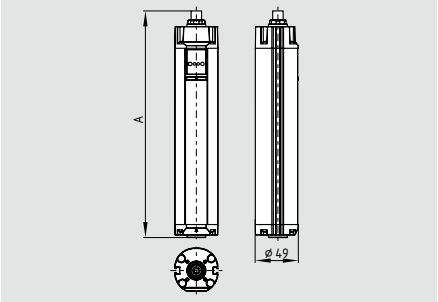

- **Safety light grid**
- 2-, 3- or 4-beam light grid
- Range 0,3 ... 40 m

Legend:
A: Total length

2-beam	A = 734,5 mm
3 and 4-beam	A = 1054,5 mm

Approvals

TÜV cULus CE

Technical data

Standards:	IEC/EN 61496-1/-2 Type 4
Enclosure:	Aluminium
Enclosure dimensions:	ø 49 mm
Connection:	Connector
Emitter:	Connector plug M12, 4-pole,
Receiver:	Connector plug M12, 8-pole
Max. cable length:	100 m / 1 Ω
Protection class:	IP 67 to EN 60529
Response time:	10 … 27 ms (depends on length and resolution)
Detection sensitivity (Resolution):	14, 30 and 50 mm
Protection field height:	
Resolution 14 mm	170 ... 1450 mm
Resolution 30, 50 mm	170 ... 1770 mm
2-, 3-, 4-beam	500, 800, 900 mm
Protection field width, Range:	
Resolution 14 mm	0,3 m ... 7 m
Resolution 30, 50 mm	0,3 m ... 10 m
High Range	
Resolution 30 mm	0,3 m ... 18 m
2-, 3-, 4-beam	0,3 m ... 10 m
High Range	
2-, 3-, 4-beam	8 m ... 40 m
Start/restart interlock:	Integrated
Contactor control:	Integrated
Blanking function:	Integrated
Cascading: (Master/Slave)	–
Light emission wavelength:	880 nm (infrared)
U_e:	24 VDC ± 10%
Safety outputs:	2 x PNP, 500 mA
Power consumption:	Emitter 4 W, Receiver 8 W
Data interface:	RS 485
Status and diagnostics:	LED display
Ambient temperature:	–10 °C … + 50 °C
Storage and transport temperature:	– 20 °C … + 70 °C
Safety classification:	
to IEC 62061:	SIL 3
to EN ISO 13849-1:	PL e
	PFH-value: 7,42 x 10^{-9} / h

Ordering details

SLC 420-E/R①-②-RFB-③

No.	Option	Description
①	xxxx	Protected heights (mm) Available lengths: 0170, 0250, 0330, 0410, 0490, 0570, 0650, 0730, 0810, 0890, 0970, 1050, 1130, 1210, 1290, 1370, 1450, 1530*, 1610*, 1690*, 1770*
②	14	Resolution 14 mm
	30	Resolution 30 mm
	50	Resolution 50 mm
③		Range 0,3 m ... 7 m**
		Range 0,3 m ... 10 m *
	H	High Range 0,3 m ... 18 m***

Ordering details

SLG 420-E/R①-RF-②

No.	Option	Description
①		Distance between outermost beams:
	0500-02	500 mm, 2-beam
	0800-03	800 mm, 3-beam
	0900-04	900 mm, 4-beam
②		Range 0,3 m ... 10 m
	H	High Range 8 m ... 40 m

Mounting brackets are included in the delivery.

Notes
* only for resolution 30 mm and 50 mm
** only for resolution 14 mm
***only for resolution 30 mm

Ordering details

Connector:

Connector plug for emitter M12, 4-pole straight	
Cable length 5 m	**KA-0804**
Cable length 10 m	**KA-0805**
Cable length 20 m	**KA-0808**
Connector plug for receiver M12, 8-pole straight	
Cable length 5 m	**KA-0904**
Cable length 10 m	**KA-0905**
Cable length 20 m	**KA-0908**

†Curtains delivered with EDM turned off — NSR0801 required for programming these functions

SLC 420 Master / Slave

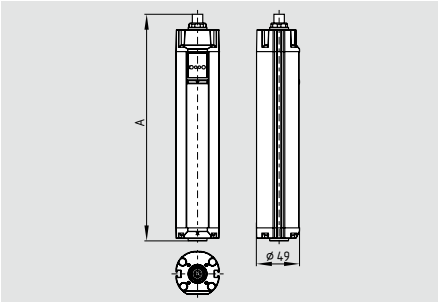

- **Safety light curtain**
- Control category Type 4to IEC/EN 61496-1, -2
- Resolution 14, 30 and 50 mm
- Protection field height:
  Master from 170 mm to 1770 mm
  Slave from 170 mm to 650 mm
- **Integrated start/restart interlock**
- **Integrated contactor control†**
- **Integrated blanking function†**
- **Diagnostic and parametrization interface†**
- Cascading of Master and Slave devices
- Range 0,3 m ... 7 m or 0,3 m ... 10 m
- Fail-safe transistor outputs
- Optical synchronisation
- Status display

Legend:
A: Total length
A = 84,5 mm + Protection field height

Approvals

TÜV cULus CE

Technical data

Standards:	IEC/EN 61496-1/-2 Type 4
Enclosure:	Aluminium
Enclosure dimensions:	ø 49 mm
Connection:	Connector plug
Master Emitter:	M12, 4-pole,
Master Receiver:	M12, 8-pole
Slave Emitter:	M12, 4-pole,
Slave Receiver:	M12 1, 8-pole
Max. cable length:	100 m / 1 Ω
Max. cable length: (Master/Slave)	0,8 m
Protection class:	IP 67 to EN 60529
Response time:	10 … 37 ms (Depends on length and resolution)
Detection sensitivity (Resolution):	14, 30 and 50 mm
Protection field height:	
Resolution 14 mm	170 ... 2100 mm
Resolution 30, 50 mm	170 ... 2420 mm
Protection field width, Range:	
Resolution 14 mm	0,3 m ... 7 m
Resolution 30, 50 mm	0,3 m ... 10 m
High Range 30 mm	0,3 m ... 18 m
Start/restart interlock:	Integrated
Contactor control:	Integrated
Blanking function:	Integrated
Cascading: (Master/Slave)	possible
Light emission wavelength:	880 nm (infrared)
U_e:	24 VDC ± 10%
Safety outputs:	2 x PNP, 500 mA
Power consumption:	Emitter 4 W, Receiver 8 W
Data interface:	RS 485
Status and diagnostics:	LED display
Ambient temperature:	–10 °C … + 50 °C
Storage and transport temperature:	– 20 °C … + 70 °C
Safety classification:	
to IEC 62061:	SIL 3
to EN ISO 13849-1:	PL e
	PFH-value: 7,42 x 10^{-9} / h

Ordering details

SLC 420-E/R①-②-RFB-③④

No.	Option	Description
①	xxxx	Protected heights (mm) Available lengths: 0170, 0250, 0330, 0410, 0490 0570, 0650, 0730, 0810, 0890 0970, 1050, 1130, 1210, 1290 1370, 1450, 1530*, 1610*, 1690*, 1770*
②	14	Resolution 14 mm
	30	Resolution 30 mm
	50	Resolution 50 mm
③		Range 0,3 m ... 7 m**
		Range 0,3 m ... 10 m*
	H	High Range 0,3 m ... 18 m, 30 mm resolution only
④	M	Master function
	S***	Slave function

Ordering details

Mounting brackets are included in the delivery.

Notes
* only for resolution 30 mm and 50 mm
** only for resolution 14 mm
***Protection field heights from 170 ... 650 mm

†Curtains delivered with EDM turned off — NSR0801 required for programming these functions

Ordering details

Connector:
Connector plug for emitter
M12, 4-pole straight

Cable length 5 m	**KA-0804**
Cable length 10 m	**KA-0805**
Cable length 20 m	**KA-0808**

Connector plug for receiver
M12, 8-pole straight

Cable length 5 m	**KA-0904**
Cable length 10 m	**KA-0905**
Cable length 20 m	**KA-0908**

Connector plug for Master/Slave connection
Emitter
2 x M12, 4-pole straight

Cable length 0,8 m	**KA-0810**

Receiver
2 x M12 x 1, 8-pole straight

Cable length 0,8 m	**KA-0901**

SLC 420 IP 69K

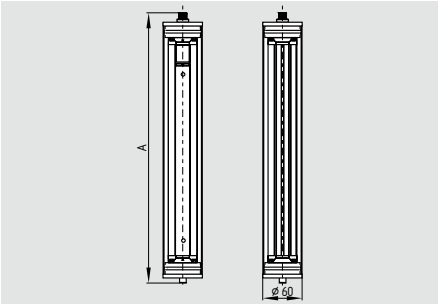

- **Safety light curtain**
- Control category Type 4 to IEC/EN 61496-1, -2
- Resolution 14 mm and 30 mm
- Protection field heights from 170 mm to 1450 mm
- **Protection class IP 69K**
- **Integrated start/restart interlock**
- **Integrated contactor control†**
- **Integrated blanking function (fixed and mobile blanking)†**
- **Diagnostic and parametrization interface†**
- Range 0,3 m ... 10 m
- Fail-safe transistor outputs
- Optical synchronisation
- Status display

Legend:
A: Total length
A = 97 mm + Protection field height

Approvals

TÜV cULus under preparation CE

Ordering details

SLC 420-E/R①-②-69-RFB

No.	Option	Description
①	xxxx	Protected heights (mm) Available lengths: 0170, 0250, 0330, 0410, 0490, 0570, 0650, 0730, 0810, 0890, 0970, 1050, 1130, 1210, 1290, 1370, 1450
②	14	Resolution 14 mm with a range of 0.3 m …7 m
	30	Resolution 30 mm with a range of 0.3 m …10 m

SLG 420 IP 69K

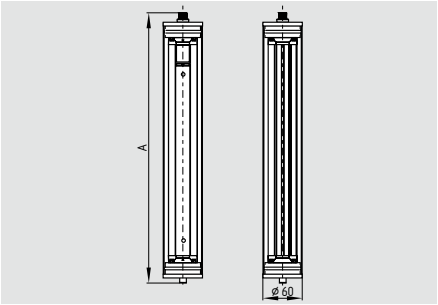

- **Safety light grid**
- 2-, 3- or 4-beam light grid
- Range 0,3 ... 12 m

Legend:
A: Total length

2-beam	A = 747 mm
3 and 4-beam	A = 1067 mm

Approvals

TÜV cULus under preparation CE

Ordering details

SLG 420-E/R①-69-RF

No.	Option	Description
①		Distance between outermost beams:
	0500-02	500 mm, 2-beam
	0800-03	800 mm, 3-beam
	0900-04	900 mm, 4-beam

Mounting brackets (stainless steel) are included in the delivery.

Technical data

Standards:	IEC/EN 61496-1/-2 Type 4
Enclosure:	Aluminium
Enclosure dimensions:	ø 60 mm
Connection:	
Emitter/Receiver:	Cable gland PG 9,
Receiver	Cable length 5 meter,
Emitter	Cable length 5 meter, Gore TM Membrane M12
Max. cable length:	100 m / 1 Ω
Protection class:	IP 69 to EN 60529
Response time:	10 … 27 ms (depends on length and resolution)
Detection sensitivity (Resolution):	14, 30 mm
Protection field height:	
Resolution 14, 30 mm	170 ... 1770 mm
2-, 3-, 4-beam	500, 800, 900 mm
Protection field width, Range:	
Resolution 14 mm	0,3 m ... 7 m
Resolution 30 mm	0,3 m ... 10 m
2-, 3-, 4-beam	0,3 m ... 10 m
Start/restart interlock:	Integrated
Contactor control:	Integrated
Blanking function:	Integrated
Cascading: (Master/Slave)	–
Light emission wavelength:	880 nm (infrared)
U_e:	24 VDC ± 10%
Safety outputs:	2 x PNP, 500 mA
Power consumption:	Emitter 4 W, Receiver 8 W
Data interface:	RS 485
Status and diagnostics:	LED display
Ambient temperature:	–10 °C … + 50 °C
Storage and transport temperature:	– 20 °C … + 70 °C
Safety classification:	
to IEC 62061:	SIL 3
to EN ISO 13849-1:	PL e
	PFH-value: 7,42 x 10^{-9} / h

Notes
Delivered with cable gland and 5 m cable

†Curtains delivered with EDM turned off — NSR0801 required for programming these functions

SLG 422-P

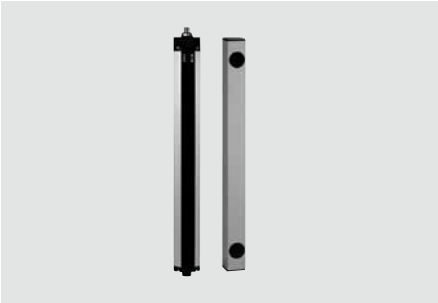

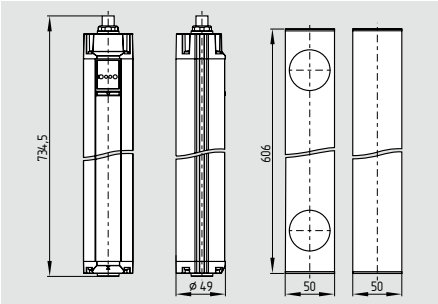

- **Safety light grid**
- Emitter and receiver in one enclosure (retro reflector)
- Control category Type 4 to IEC/EN 61496-1, -2
- Protection field heights 500 mm
- 2-beam light grid
- **Integrated start/restart interlock**
- **Integrated contactor control†**
- Range 0,3 m ... 7 m
- Fail-safe transistor outputs
- Status display
- Protection class IP 67

Technical data

Standards:	IEC/EN 61496-1/-2 Type 4
Enclosure:	Aluminium
Enclosure dimensions:	ø 49 mm
Deflecting mirror:	50 x50 x 606 mm
Connection:	Connector plug
Emitter/Receiver:	M12, 8-pole
Max. cable length:	100 m / 1 Ω
Protection class:	IP 67 to EN 60529
Response time:	10 ms
Detection sensitivity (Resolution):	500 mm
Protection field height:	
2-beam	500 mm
Protection field width, Range:	
2-beam	0,3 m ... 7 m
Start/restart interlock:	Integrated
Contactor control:	Integrated
Light emission wavelength:	880 nm (infrared)
U_e:	24 VDC ± 10%
Safety outputs:	2 x PNP, 500 mA
Power consumption:	10 W
Data interface:	–
Status and diagnostics:	LED display
Ambient temperature:	–10 °C ... + 50 °C
Storage and transport temperature:	– 20 °C ... + 70 °C
Safety classification:	
to IEC 62061:	SIL 3
to EN ISO 13849-1:	PL e
	PFH-value: 7,42 x 10^{-9} / h

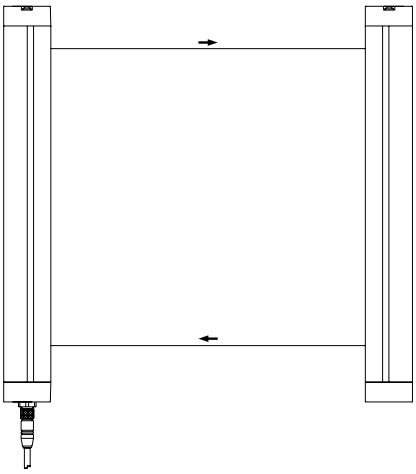

Approvals

TÜV c UL us CE

Ordering details

SLG 422-P-E/R0500-02-RF	Safety light grid
ULS-P-0500	Deflecting mirror

†Curtains delivered with EDM turned off — NSR0801 required for programming these functions

Ordering details

Connector:

Connector plug M12, 8-pole straight

Cable length 5 m	**KA-0904**
Cable length 10 m	**KA-0905**
Cable length 20 m	**KA-0908**

Mounting brackets are included in the delivery.

SLC 430

- **Safety light curtain**
- Control category Type 4 to IEC/EN 61496-1, -2
- Resolution 30 mm
- Protection field heights from 236 mm to 1804 mm
- slim design, size 12 x 20 mm
- **Integrated start/restart interlock**
- **Integrated contactor control**
- Range 0,3 m ... 3,5 m
- Status display
- Protection class IP 65

NSR-0605

- **Safety controller**
  Enclosure dimensions: 240 x 160 mm

Technical data

Standards:	IEC/EN 61496-1/-2
Control Category:	Type 4 in combination with evaluation unit NSR-0605
Enclosure:	Aluminium
Enclosure dimensions:	12 x 20 mm
Connection:	Connector M8, 4-pole
Max. cable length:	100 m / 1 Ω
Protection class:	IP 65 to EN 60529
Response time including relay output:	50 ms
Detection sensitivity (Resolution):	30 mm
Protection field height:	236 ... 1804 mm
Protection field width, Range:	0,3 m ... 3,5 m
Start/restart interlock:	Integrated
Contactor control:	Integrated
Light emission wavelength:	880 nm (infrared)
U_e:	22 ... 30 VDC 18 ... 25 VAC
Power consumption:	8 W

System

Data interface:	RS 485
Status and diagnostics:	LED display
Ambient temperature:	0 °C … + 50 °C
Storage and transport temperature:	– 10 °C … + 70 °C
Safety outputs:	
2 x Relay contact	250 V / 4 A
Signalling output:	
1 x Relay contact	42 V / 4 A

Approvals

TÜV c UL us CE

Ordering details

SLC 430-E/R①-30-RF-SYS

No.	Option	Description
①	xxxx	Protected heights (mm) Available lengths: 0236, 0460, 0684, 0908, 1132, 1356, 1580, 1804

* Range up to 5 m upon request

Included in delivery

Emitter and receiver including mounting set, controller NSR-0605, cable set KA-0610 (cable length 5 m)

Ordering details

Connector:
Connector plug for ermitter / receiver
M8, 4-pole straight

Cable length 5 m	**KA-0610**
Cable length 10 m	**KA-0611**

Safety light curtains with integrated muting-, blanking- and Cyclic-function

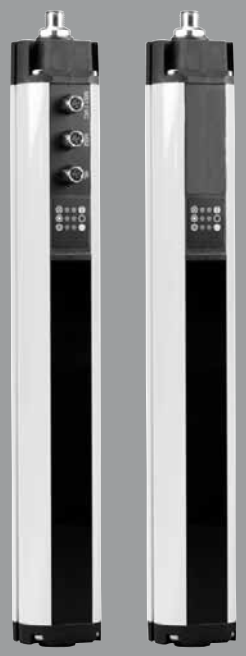

System features:

- Control Category 4 acc. to EN 954-1 or acc. to IEC 61496, Type 4
- Integrated muting function
- 2 plugs for muting sensors
- Integrated override function
- Integrated cyclic operation function
- Diagnostics display
- Optical synchronisation
- Compact design
- Simple, flexible mounting and adjustment

SLC/SLG 425I

The SLC/SLG 425I is a system for universal use with integrated muting function. The M8 connectors allow a direct connection and flexible positioning of the different muting sensors (e.g. inductive, capacitive or optical sensors). In this way, a safe triggering of the muting function can be obtained for objects of different sizes. The additional integrated override function allows for a controlled restart of the machine to transport the accumulated material out of the protection field after a failure. The safety light curtains/grids with muting function enable a smooth and trouble-free material feeding (input and output), whilst offering a permanent protection of human life.

- Integrated muting function for material transport in 1 or 2 directions
- Connection of 2 or 4 external muting sensors
- Connection of different muting sensors
- Direct connection (M8) of the muting sensors to the SLC/SLG
- Muting controller for crosswise or parallel arrangement of the external sensors
- Adjustable muting time of 30 s, 90 min or 100 h
- Integrated override function
- Range up to 12 m

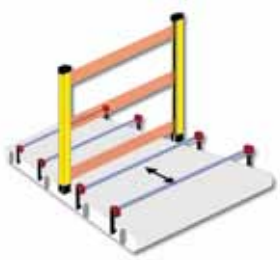

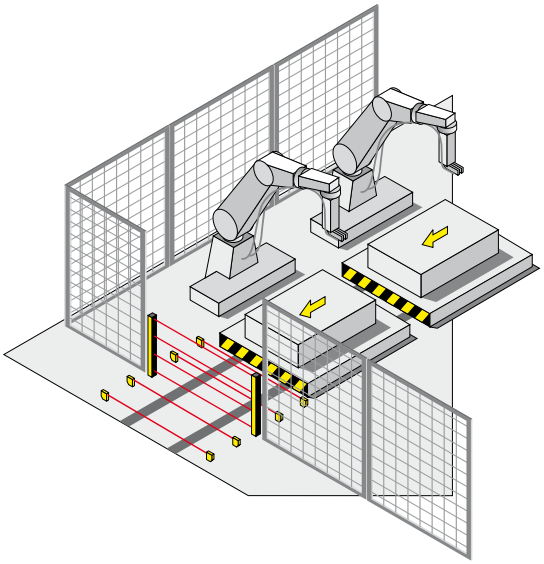

Cyclic operation
Cyclic operation is a mode of operation, in which the machine automatically starts a work process, as soon as the operator releases the protection zone of the light grid.
A cycle is defined as the one-time interruption and release of the protection zone.
In one-cycle operation, a new machine cycle is initiated, when the protection zone is interrupted one time.

Example:
The material is fed automatically without interruption of the protection zone. After initialisation, the machine starts the first cycle. The operator now interrupts the protection zone to remove the material. The next cycle starts automatically.

In two-cycle operation, a new machine cycle is started when the protection zone is interrupted twice.

Example:
The operator loads the machine and gives the start command. After the process is finished, the operator removes the processed material (1st cycle) and loads a new part for processing (2nd cycle). The next cycle starts automatically.

The light grid additionally monitors a signal (machine contact) of the machine, which signals the end of the hazardous movement. This signal is used for the cycle reset and enables an immediate intervention in the protection zone.

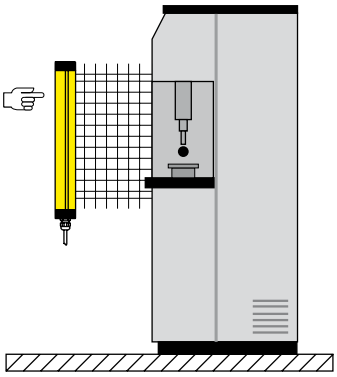

SLC 425I

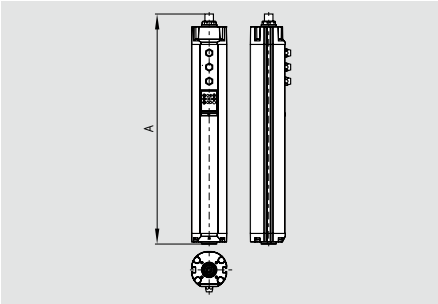

- **Safety light curtain**
- Control category Type 4 to IEC/EN 61496-1, -2
- Resolution 14 and 30 mm
- Protection field heights from 170 mm to 1770 mm
- **Integrated start/restart interlock**
- **Integrated contactor control†**
- **Integrated muting and override function†**
- **Integrated blanking function (fixed and mobile blanking)†**
- **Cyclic operation (1 ... 8 Cycles)**
- Range 0,3 ... 10 m
- Fail-safe transistor outputs
- Optical synchronisation
- Status display
- Different muting sequences can be parameterized
- **Protection class IP 67**

Legend:
A: Total length
Emitter
A = 84,5 mm + Protection field height
Receiver
A = 148,5 mm + Protection field height

Approvals

TÜV cULus CE

Ordering details

SLC 425I-E/R①-②-RFBC

No.	Option	Description
①	xxxx	Protected heights (mm) Available lengths: 0170, 0250, 0330, 0410, 0490, 0570, 0650, 0730, 0810, 0890, 0970, 1050, 1130, 1210, 1290, 1370, 1450, 1530*, 1610*, 1690*, 1770*
②	14, 30	Resolution 14 mm, 30 mm

SLG 425I

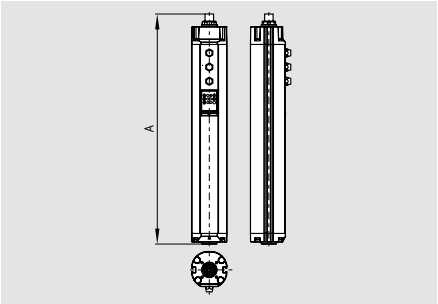

- **Safety light grid**
- 2-, 3- or 4-beam light grid
- Protection field heights 500, 800 or 900 mm
- Range 0,3 ... 18 m

Legend:
A: Total length

Emitter	2-beam	A = 804 mm
	3 and 4-beam	A = 1124 mm
Receiver	2-beam	A = 868 mm
	3 and 4-beam	A = 1188 mm

Approvals

TÜV cULus CE

Ordering details

SLG 425I-E/R①-RFBC

No.	Option	Description
①		Distance between outermost beams:
	0500-02	500 mm, 2-beam
	0800-03	800 mm, 3-beam
	0900-04	900 mm, 4-beam

* only for resolution 30 mm
Mounting brackets are included in the delivery.

†Curtains delivered with EDM turned off — NSR0801 required for programming these functions

Technical data

Standards:	IEC/EN 61496-1/-2 Type 4
Enclosure:	Aluminium
Enclosure dimensions:	ø 49 mm
Connection:	Connector plug
Emitter:	M12, 4-pole,
Receiver:	M12, 8-pole,
Muting sensors:	2 x connector plugs M8, 3-pole
Muting lamp:	M8, 3 polig
Max. cable length:	100 m / 1 Ω
Protection class:	IP 67 to EN 60529
Response time:	7 … 28,5 ms (Depends on length and resolution)
Detection sensitivity (Resolution):	14 and 30 mm
Protection field height:	
Resolution 14 mm	170 ... 1450 mm
Resolution 30 mm	170 ... 1770 mm
2-, 3-, 4-beam	500, 800, 900 mm
Protection field width, Range:	
Resolution 14 mm	0,3 m ... 7 m
Resolution 30 mm	0,3 m … 10 m
2-, 3-. 4-beam	0,3 m ... 18 m
Start/restart interlock:	Integrated
Contactor control:	Integrated
Muting- and Override-Funktion:	Integrated
Muting sensors:	2 or 4 external sensors
Light emission wavelength:	880 nm (infrared)
U_e:	24 VDC ± 10%
Safety outputs:	2 x PNP, 500 mA
Power consumption:	Emitter 4 W, Receiver 8 W
Data interface:	RS 485
Status and diagnostics:	LED display
Ambient temperature:	–10 °C … + 50 °C
Storage and transport temperature:	– 20 °C … + 70 °C
Safety classification:	
to IEC 62061:	SIL 3
to EN ISO 13849-1:	PL e
	PFH-value: 7,42 x 10^{-9} / h

Ordering details

Connector:
Connector plug for emitter
M12, 4-pole straight

Cable length 5 m	**KA-0804**
Cable length 10 m	**KA-0805**
Cable length 20 m	**KA-0808**

Connector plug for receiver
M12, 8-pole straight

Cable length 5 m	**KA-0904**
Cable length 10 m	**KA-0905**
Cable length 20 m	**KA-0908**

Connector plug for muting sensors
M12x1, 4 pole to M8x1, 3 pole

Cable length 2m	**KA-0965**

For connection to SLC/G 425I

SLG425-IP

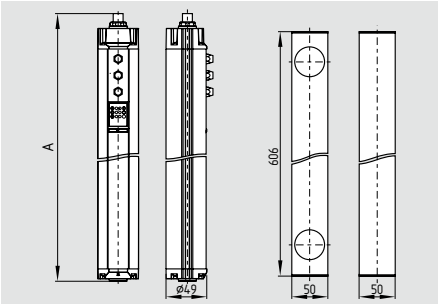

- **Safety light grid**
- Emitter and receiver in one enclosure (retro reflector)
- Control category Type 4 to IEC/EN 61496-1, -2
- Protection field heights 500 mm
- 2-beam light grid
- **Integrated start/restart interlock**
- **Integrated contactor control†**
- Range 0,3 m ... 7 m
- Fail-safe transistor outputs
- Status display
- Protection class IP 67

Approvals

Technical data

Standards:	IEC/EN 61496-1/-2 Type 4
Enclosure:	Aluminium
Enclosure dimensions:	ø 49 mm
Deflecting mirror:	50 x50 x 606 mm
Connection:	Connector plug
Emitter/Receiver:	M12, 8-pole
Max. cable length:	100 m / 1 Ω
Protection class:	IP 67 to EN 60529
Response time:	15 ms
Detection sensitivity (Resolution):	500 mm
Protection field height:	
2-beam	500 mm
Protection field width, Range:	
2-beam	0,3 m ... 7 m
Start/restart interlock:	Integrated
Contactor control:	Integrated
Light emission wavelength:	880 nm (infrared)
U_e:	24 VDC ± 10%
Safety outputs:	2 x PNP, 500 mA
Power consumption:	10 W
Data interface:	RS 485
Status and diagnostics:	LED display
Ambient temperature:	–10 °C … + 50 °C
Storage and transport temperature:	– 20 °C … + 70 °C
Safety classification:	
to IEC 62061:	SIL 3
to EN ISO 13849-1:	PL e
	PFH-value: 7,42 x 10^{-9} / h

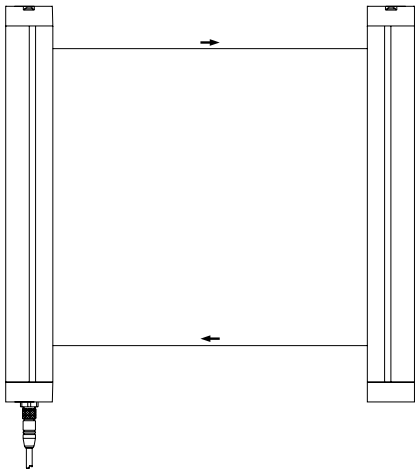

Ordering details

SLG 425IP-E/R0500-02-RF	Safety light curtain
ULS-P-0500	Deflecting mirror

†Curtains delivered with EDM turned off — NSR0801 required for programming these functions

Ordering details

Connector:

Connector plug M12, 8-pole straight	
Cable length 5 m	**KA-0904**
Cable length 10 m	**KA-0905**
Cable length 20 m	**KA-0908**

Mounting brackets are included in the delivery.

Reflection light sensor (Muting sensor)

LF 50-11P

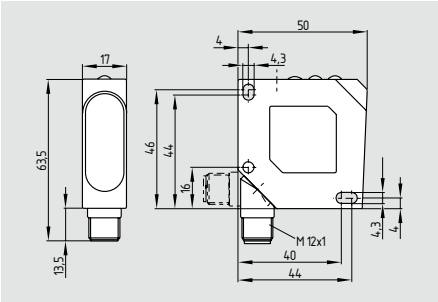

- Range 20 m
- Connector can be rotated
- LED status display
- Protection class IP 67
- Antivalent switching outputs
- Infrared laser light 670 nm
- Laser protection class 1

Approvals

CE

Technical data

Standards:	EN 60974-5-2
Laser protection class 1:	EN 60825-1-10/03
Enclosure:	ABS
Enclosure dimensions:	50 x 50 x 17 mm
Connection:	Connector plug M12, 4-pole, can be rotated
Max. cable length:	100 m
Protection class:	IP 67
Switching frequency:	2500 Hz
Range:	0 ... 5.5 m
Infrared laser light:	670 nm
U_e:	10 ... 30 VDC
Switching output:	2 x PNP 200 mA
Beam diameter:	5 ... 24 mm
LED status display:	soiling, switching condition and power on
Ambient temperature:	– 20 °C ... + 45 °C
Storage and transport temperature:	– 20 °C … + 80 °C

System components

Reflector R 51 x 61-L

Reflector R D83

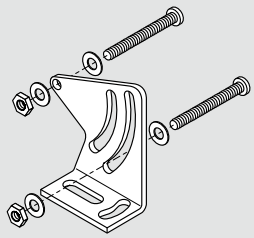

Mounting angle BF 50

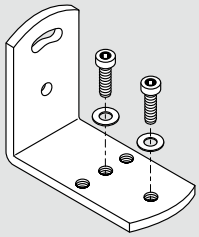

Mounting angle BF UNI 1

Ordering details

LF 50-11P

Note

Mounting angles and cables are not included in the delivery.

Ordering details

Connector:

Connector plug M12	**KD M12-4 (without cable)**
Connector plug M12	**KD M12-4-2m**
Connector plug M12	**KD M12-4-5m**
Connector plug for muting sensors M12x1, 4 pole to M8x1, 3 pole Cable length 2m For connection to SLC/G 425I	**KA-0965**
Reflector	**R 51 x 61-L**
Reflector	**R D83**
Mounting angle	**BF 50**
Mounting angle universal	**BF UNI 1**

System components

Alignment kit EA-5

Yellow lighting element with wall support

MS-1000

System components

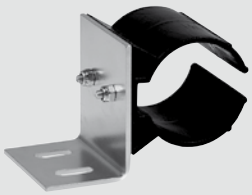

MS-1010 Mounting kit

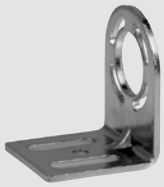

MS-1031 Mounting kit for ULS-A4

MS-1036 Mounting kit

Mounting kit MS-1051

System components

Mounting kit MS-1073

Mounting kit MS-690

Vibration damper MSD-2 / MSD-4

Test rod PLS-01, PLS-02

Ordering details

Laser alignment tool for SLC / SLG series	**EA5**
Muting lamp with LED block	**MK2**
Operating conditions indication red, green, yellow LED	**MK3**
Operating conditions indication red, green	**MK4**
Signalling lamp with bulb 24 V yellow with wall mounting bracket	**MK5**
Mounting kit for SLC /SLG 220	
4 x angle incl. screws	**MS-1000**
2 x angle incl. screws	**MS 1072**

Ordering details

Mounting kit for central fixation for SLC /SLG 220	
2 x angle	**MS-1010**
Mounting kit for ULS-A4	
2 x incl. screws	**MS-1031**
MS-1036 Mounting kit for SLC/SLG 420-425 in V4A	
4 x incl. screws	**MS-1036**
Mounting kit lateral fixation for SLC/SLG 420-425	
Consisting of 2 steel angles, 4 screws and 4 T-slot nuts	**MS-1051**

Ordering details

Mounting kit for deflecting mirror ULS-M	
2 x mounting angle	**MS-1073**
Mounting kit for SLC 430	
2 x clamping profile	**MS-690**
Vibration damper	
8 x vibration damper for SLC/SLG 220	**MSD-2**
8 x vibration damper for SLC/SLG 420-425	**MSD-4**
Test rod for resolution 30mm	**PLS-01**
Test rod for resolution 14mm	**PLS-02**

System components

NSR-0801

NSR-0700

Deflecting mirror ULS-M

Deflection Mirror Application Notes

ULS-M: Must be used when range is greater than 6m. With 1 mirror, range reduced by 10%, with 2 or more mirrors range reduced by 15% for each mirror.

ULS-A4: Must be used when range is less than 6m. With a loss of 20% at each mirror, only 1 mirror per emitter/receiver pair is recommended.

System components

Deflecting mirror ULS-A4, ø 49 mm

Mounting Stands

Muting Carrier Set

System components

Protective enclosure with deflecting mirror

Protective enclosure for light grids

Aluminium profile for SLC 430

Ordering details

Bus converter	
Converter for programming of SLC/SLG 420-425 Schnittstelle USB 2.0	**NSR 0801**
Converter for programming of SLC / SLG 220 RS232 interface	**NSR 0700**
Deflecting mirror ULS-M incl. mounting angle	
Mirror height 200mm	**ULS-M-0200**
Mirror height 350mm	**ULS-M-0350**
Mirror height 500mm	**ULS-M-0500**
Mirror height 650mm	**ULS-M-0650**
Mirror height 800mm	**ULS-M-0800**
Mirror height 950mm	**ULS-M-0950**
Mirror height 1250mm	**ULS-M-1250**
Mirror height 1550mm	**ULS-M-1550**
Mirror height 1700mm	**ULS-M-1700**

Ordering details

Deflecting mirror ULS-A4 incl. mounting angle	
Mirror height 200 mm	**ULS-A4-0200**
Mirror height 400 mm	**ULS-A4-0400**
Mirror height 550 mm	**ULS-A4-0550**
Mirror height 700 mm	**ULS-A4-0700**
Mirror height 850 mm	**ULS-A4-0850**
Mirror height 1000 mm	**ULS-A4-1000**
Mounting Stands	
Height including plinth 500mm	**MST-0500**
Height including plinth 750mm	**MST-0750**
Height including plinth 1000mm	**MST-1000**
Height including plinth 1250mm	**MST-1250**
Height including plinth 1500mm	**MST-1500**
Height including plinth 1750mm	**MST-1750**
Height including plinth 2000mm	**MST-2000**
Muting Carrier Set	
2 x Aluminium profile	**MT-0400**

Ordering details

Protective enclosure with deflecting mirror	
version for 2-beam light grids	**ULS-ST2**
version for 3-beam light grids	**ULS-ST3**
version for 4-beam light grids	**ULS-ST4**
Protective enclosure for light grids	
Height 1114mm hot-dip galvanised	**SG1**
Height 1334 mm hot-dip galvanised	**SG2**
Height 1114 mm RAL 1021	**SG3**
Height 1334 mm RAL 1021	**SG4**
Aluminium profile for SLC 430	
2 x profile, length 420 mm	**MS- 1501**
2 x profile, length 643 mm	**MS- 1502**
2 x profile, length 865 mm	**MS- 1503**
2 x profile, length 1090 mm	**MS- 1504**
2 x profile, length 1312 mm	**MS- 1505**
2 x profile, length 1537 mm	**MS- 1506**
2 x profile, length 1761 mm	**MS- 1507**
2 x profile, length 1985 mm	**MS- 1508**

Notes

Safety monitoring modules for optoelectronic safety components

Overview of the Features

Apart from the conventional safety controllers, the Schmersal Group also offers microprocessor-controlled safety technology.

Depending on the complexity and the number of safety circuits, integral solutions comprised of safety monitoring modules, programmable safety controls or safety field bus systems featuring visualization and diagnostic possibilities are available.

SRB 301LC/B

- Suitable for signal processing of potential-free outputs, e.g. emergency stop command devices, position switches and solenoid interlocks
- Suitable for signal processing from the outputs of magnetic safety switches (to this end, equipped with built-in current and voltage limitation)
- Suitable for signal processing of outputs connected to potentials (AOPD's), e.g. safety light grids/curtains
- 1 or 2 channel control
- 3 safety contacts, STOP 0
- 1 signalling output (NC)
- Manual reset without edge detection
- Automatic reset function
- 4 LEDs to show operating conditions
- Category 4 to EN 954-1

Approvals

Technical data

Standards:	IEC/EN 60204-1, IEC/EN 60947-5-1, EN 954-1, BG-GS-ET-20
Product utilisation up to category in accordance with EN 954-1:	4
Start conditions:	Automatic or start button
Feedback circuit (Y/N):	yes
ON delay with reset button:	≤ 30 ms
Drop-out delay in case of emergency stop:	≤ 300 ms
Drop-out delay in case of power failure:	≤ 50 ms
Rated operating voltage U_e:	24 VDC –15%/+20%, residual ripple max. 10%; 24 VAC –15%/+10%
Rated operating current I_e:	0.08 A
Frequency range:	50 / 60 Hz
Fuse rating for the operating voltage:	0.5 A gG D fuse
Internal electronic protection (Y/N):	no
Power consumption:	2.1 W; 3.0 VA
Monitored inputs:	
Short-circuit recognition:	no
Wire breakage detection:	yes
Earth connection detection:	yes
Number of NC contacts:	2
Number of NO contacts:	0
Max. conduction resistance:	40 Ω
Outputs:	
Stop category 0:	3
Stop category 1:	0
Number of safety contacts:	3
Number of signalling outputs:	1
Max. switching capacity of the safety contacts:	250 VAC, 6 A ohmic (inductive in case of appropriate protective wiring)
Utilisation category to EN 60947-5-1:	AC-15: 230 V / 6 A DC-13: 24 V / 6 A
Mechanical life:	10^7 operations
Ambient conditions:	
Environmental temperature:	– 25°C … + 45°C
Storage and transport temperature:	– 25°C … + 70°C
Protection class:	Enclosure: IP 40, Terminals: IP 20, Clearance: IP 54
Mounting:	Snaps onto standard DIN rail to EN 60715
Connection type:	Screw connection, solid strand or multi-strand (incl. conductor ferrules)
min. cable section:	0.25 mm^2
max. cable section:	2.5 mm^2
Weight:	230 g
Dimensions (Height/Width/Depth):	100 x 22.5 x 121 mm
Note:	Inductive loads (e.g. contactors, relays, etc.) are to be suppressed by means of a suitable circuit.

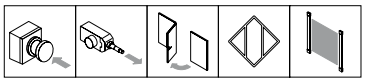

Ordering details

SRB 301LC/B-24V

Note

For some applications, the use of a monitored start button (reset with edge detection) is required.

Note

- Input level: The example shows a 2-channel control circuit with a safety light grid, an external reset button Ⓡ and a feedback circuit Ⓗ2.
- The control system recognises wire-breakage and earth faults in the monitoring circuit.
- Relay outputs: Suitable for 2 channel control, for increase in capacity or number of contacts by means of contactors or relays with positive-guided contacts.
- Connect potential p-type outputs of safety light grids/curtains to S12/S22. The devices must have the same reference potential.
- Automatic start:
  The automatic start is programmed by connecting the feedback circuit to the terminals X1/X2. If the feedback circuit is not required, establish a bridge

Wiring diagram

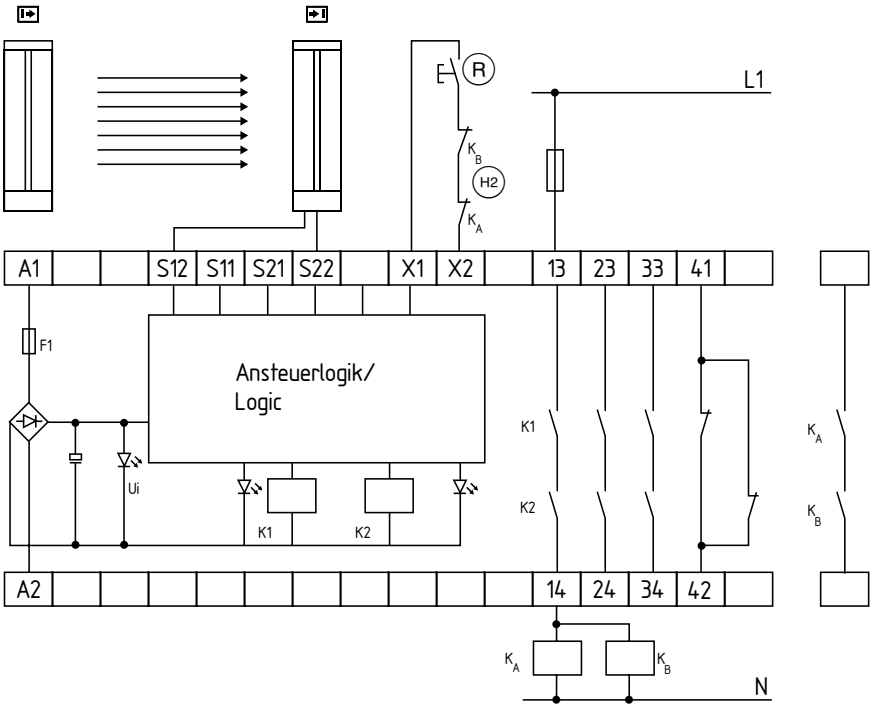

LED

The integrated LED's indicate the following operating conditions:

- Position relay K1
- Position relay K2
- Supply voltage U_B
- Internal operating voltage U_i

Note

Additional safety monitoring modules available. Please consult factory.

SRB 301ST

- Suitable for signal processing of potential-free outputs, e.g. emergency stop command devices, position switches and solenoid interlocks
- Suitable for signal processing of outputs connected to potentials (AOPDs), e.g. safety light grids/curtains
- 1 or 2 channel control
- 3 safety contacts, STOP 0
- 1 signalling output (NC)
- Optionally with short-circuit recognition (through switch)
- With hybrid fuse
- Reset with edge detection or automatic reset function
- 4 LEDs to show operating conditions
- Category 4 to EN 954-1
- Plug-in screw connection

Approvals

Technical data

Standards:	IEC/EN 60204-1, EN 60947-5-3, EN 954-1, BG-GS-ET-14, BG-GS-ET-20
Product utilisation up to category in accordance with EN 954-1:	4
Product utilisation in accordance with EN 13849-1:	Cat. 4-PL e
Start conditions:	Automatic or start button (optionally monitored)
Feedback circuit (Y/N):	yes
ON delay with reset button:	≤ 400 ms
Drop-out delay in case of emergency stop:	≤ 35 ms
Drop-out delay in case of power failure:	≤ 100 ms
Rated operating voltage U_e:	24 VAC/DC
Rated operating current I_e:	0.016 A
Frequency range:	50 / 60 Hz
Fuse rating for the operating voltage:	Internal electronic trip, tripping current > 0.05 mA
Internal electronic protection (Y/N):	yes
Power consumption:	2.8 VA
Monitored inputs:	
Short-circuit recognition:	optional
Wire breakage detection:	yes
Earth connection detection:	yes
Number of NC contacts:	2
Number of NO contacts:	0
Max. conduction resistance:	40 Ω
Outputs:	
Stop category 0:	3
Stop category 1:	0
Number of safety contacts:	3
Number of auxiliary contacts:	0
Number of signalling outputs:	1
Max. switching capacity of the safety contacts:	250 VAC, 6 A ohmic (inductive in case of appropriate protective wiring)
Utilisation category to EN 60947-5-1:	AC-15: 230 V / 6 A; DC-13: 24 V / 6 A
Mechanical life:	10^7 operations
Ambient conditions:	
Environmental temperature:	-25°C…+45°C
Storage and transport temperature:	-25°C…+70°C
Protection class:	Enclosure: IP 40, Terminals: IP 20, Clearance: IP 54
Mounting:	Snaps onto standard DIN rail to EN 60715
Connection type:	Screw connection, plug-in
min. cable section:	0.25 mm^2
max. cable section:	2.5 mm^2
Weight:	250 g
Dimensions (Height/Width/Depth):	120 x 22.5 x 121 mm
Note:	Inductive loads (e.g. contactors, relays, etc.) are to be suppressed by means of a suitable circuit.

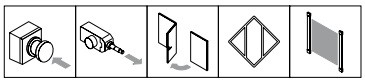

Ordering details

SRB 301ST

Note

- Input level: The example shows a 2-channel control circuit with a safety light grid, an external reset button Ⓡ and a feedback circuit Ⓗ2.
- The control recognises cross-short, cable break and earth leakages in the monitoring circuit.
- F1 = hybrid fuse
- Relay outputs: Suitable for 2 channel control, for increase in capacity or number of contacts by means of contactors or relays with positive-guided contacts.
- Switch setting:
  The cross-wire short detection function (factory default) is programmed by means of the switch located underneath the front cover of the module:
  Position nQS (top):
  no cross-wire short protection, suitable for 1-channel applications and applications with outputs with potential in the control circuits.
  Position QS (bottom):
  cross-wire short protection, suitable for 2-channel applications without outputs with potential in the control circuits.
- Connect potential p-type outputs of safety light grids/curtains to S12/S22. The devices must have the same reference potential. (QS-switch = nQS)
- Automatic start:
  The automatic start is programmed by connecting the feedback circuit to the terminals S12/X3. If the feedback circuit is not required, establish a bridge

Wiring diagram

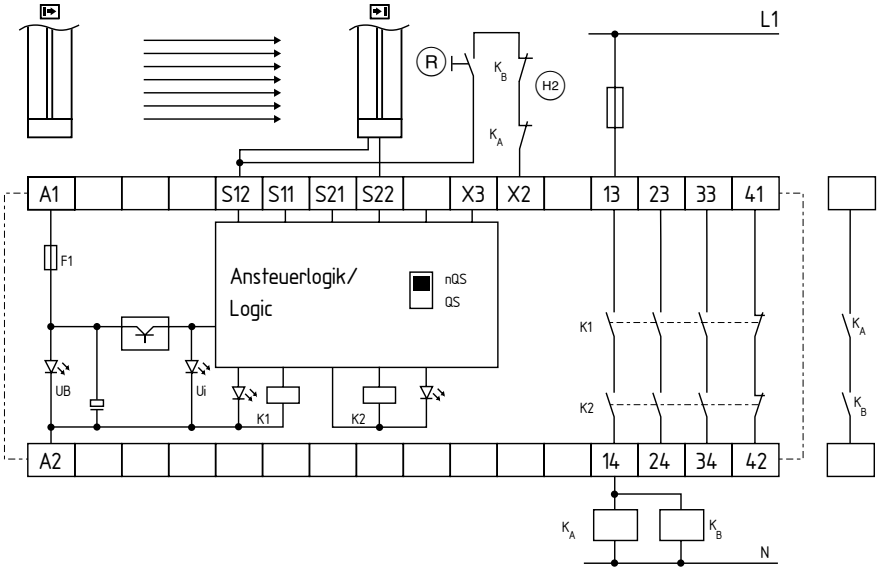

LED

The integrated LED's indicate the following operating conditions:

- Position relay K1
- Position relay K2
- Supply voltage U_B
- Internal operating voltage U_i

Note

Additional safety monitoring modules available. Please consult factory.

SCR 211

- Suitable for signal processing of outputs connected to potentials (AOPDs), e.g. safety light grids/curtains
- 1 or 2 channel control
- 2 safety contacts, STOP 0
- 1 safety contacts, STOP 1
- 1 signalling output (NC)
- With hybrid fuse
- Reset with edge detection or automatic reset function
- 4 LEDs to show operating conditions
- Category 4 to EN 954-1
- Plug-in screw connection

Approvals

CE

Ordering details

SCR 211

Technical data

Standards:		IEC/EN 60204-1, EN 60947-5-3, EN 954-1, BG-GS-ET-14, BG-GS-ET-20
Product utilisation up to category in accordance with EN 954-1:		4
Start conditions:		Automatic or start button
Feedback circuit (Y/N):		yes
ON delay with automatic start:		≤ 40 ms
Drop-out delay in case of emergency stop:		≤ 50 ms
Rated operating voltage U_e:		24 VAC/DC
Frequency range:		50 / 60 Hz
Fuse rating for the operating voltage:		Internal electronic trip, tripping current > 1.0 A, Reset after disconnection of supply voltage
Internal electronic protection (Y/N):		yes
Power consumption:		5,1 W; 5,7 VA, plus signalling output
Monitored inputs:		
Short-circuit recognition:		no
Wire breakage detection:		yes
Earth connection detection:		yes
Number of NC contacts:		2
Number of NO contacts:		0
Max. conduction resistance:		40 Ω
Outputs:		
Stop category 0:		2
Stop category 1:		1
Number of safety contacts:		3
Number of auxiliary contacts:		0
Number of signalling outputs:		1
Max. switching capacity of the safety contacts:		250 VAC, 4 A ohmic (inductive in case of appropriate protective wiring)
Utilisation category to EN 60947-5-1:	13-14, 23-24:	AC-15: 230 V / 1,5 A, DC-13: 24 V / 1,2 A;
	37/38:	AC-15: 230 V / 3 A, DC-13: 24 V / 2 A
Mechanical life:		10^7 operations
Ambient conditions:		
Ambient temperature:		-25°C…+45°C
Storage and transport temperature:		-25°C…+70°C
Protection class:		Enclosure: IP 40, Terminals: IP 20, Clearance: IP 54
Mounting:		Snaps onto standard DIN rail to EN 60715
Connection type:		Screw connection, plug-in
min. cable section:		0.25 mm^2
max. cable section:		2.5 mm^2
Weight:		255 g
Dimensions (Height/Width/Depth):		100 x 22,5 x 121 mm
Note:		Inductive loads (e.g. contactors, relays, etc.) are to be suppressed by means of a suitable circuit.

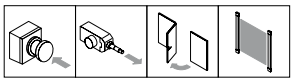

Note

- Input level: The example shows a 2-channel control circuit with a safety light grid, an external reset button Ⓡ and a feedback circuit Ⓗ2.
- The control system recognises wire-breakage and earth faults in the monitoring circuit.
- Relay outputs: Suitable for 2 channel control, for increase in capacity or number of contacts by means of contactors or relays with positive-guided contacts.
- Control category 3 to EN 954-1
- Automatic start:
  The automatic start is programmed by connecting the feedback circuit to the terminals X1/X3. If the feedback circuit is not required, establish a bridge

Wiring diagram

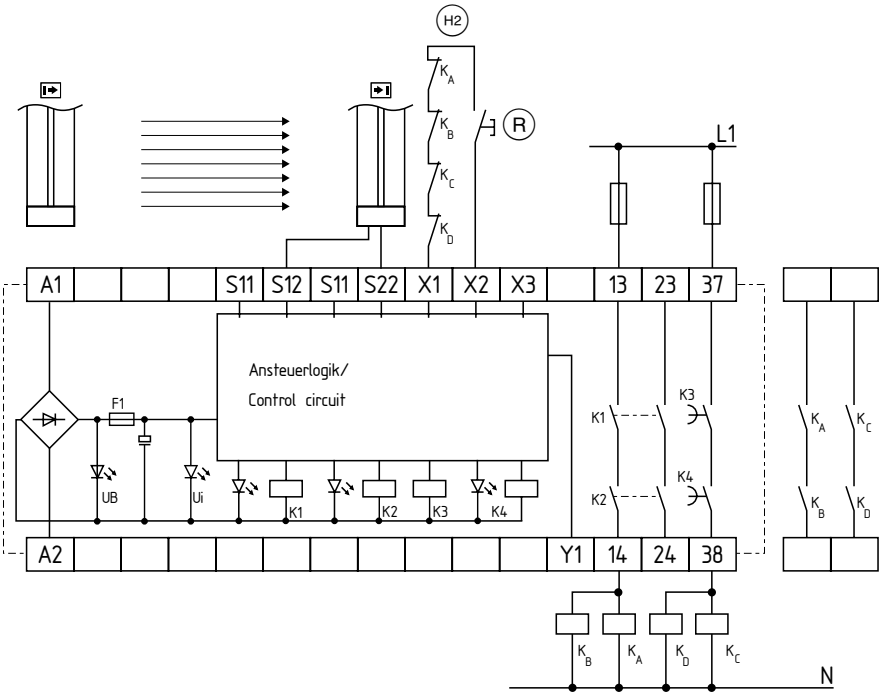

LED

The integrated LED's indicate the following operating conditions:

- Position relay K1
- Position relay K2
- Internal operating voltage U_i
- Position relay K3/4

Note

Additional safety monitoring modules available. Please consult factory.

PROTECT-PSC

Programmable modular safety controller

PROTECT-PSC is particularly suitable for the safe evaluation and coupling of multiple safety-related signals such as emergency stop control equipment, guard monitoring, safety light curtains (AOPDs) or safety sensors and solenoid interlocks equipped with the Schmersal CSS technology.

The range of application of the PROTECT-PSC controller system includes complex individual machines as well as small up to medium-sized integrated manufacturing systems.

Features
- Modular design
- Integration of safe and operational signals
- Evaluation of over 250 input and output signals
- Free programming to IEC 61131 through default USB interface or
- Signal coupling through external wiring without programming
- External gateway connectivity (PROFIBUS, Device Net or CC-Link)
- Reaction time 22 ms (transistor outputs) or 37 ms (relay outputs)
- Visualization and status indication on module or PC
- Smooth fitting onto DIN rails

Detailed information on the PROTECT-PSC can be found in the detailed product documentation. Please consult factory.

SCHMERSAL
USA

660 White Plains Road
Suite 160
Tarrytown, New York 10591

Tel: (914) 347-4775
Fax: (914) 347-1567

E-mail: infousa@schmersal.com

www.schmersalusa.com

SCHMERSAL
Canada

15 Regan Road
Unit #3
Brampton, Ontario L7A 1E3

Tel: (905) 495-7540
Fax: (905) 495-7543

E-mail: infocanada@schmersal.com

www.schmersalcanada.com

5.10-5M